80x80x25 mm

17~22 CFM



Specifications

Model	P/N	Bearing	Rating Voltage	Freq.	Power Current	Power Consumption	Speed	Air Flow	Static Pressure	Noise	Weight
		● VAPO ○ BALL ⊙ Sleeve	(VAC)	(Hz)	(AMP)	(WATTS)	(RPM)	(CFM)	(Inch-H_2O)	(dB(A))	(g)
SF11580AT	1082HSL.GN	⊙	115	50/60	0.12/0.10	12/11	2300/2750	17/21	0.12/0.18	29/33	260
SF11580AT	1082HBL.GN	○	115	50/60	0.12/0.10	12/11	2450/2900	18/22	0.13/0.19	30/34.5	260
SF23080AT	2082HSL.GN	⊙	220-240	50/60	0.07/0.07	14/13.5	2300/2750	17/21	0.12/0.18	29/33	260
SF23080AT	2082HBL.GN	○	220-240	50/60	0.07/0.07	14/13.5	2450/2900	18/22	0.13/0.19	30/34.5	260

Frame : Aluminum alloy

Safety : UL-CUL/TUV NORD/CE/CCC/BSMI

Air Flow-Static Pressure Characteristics

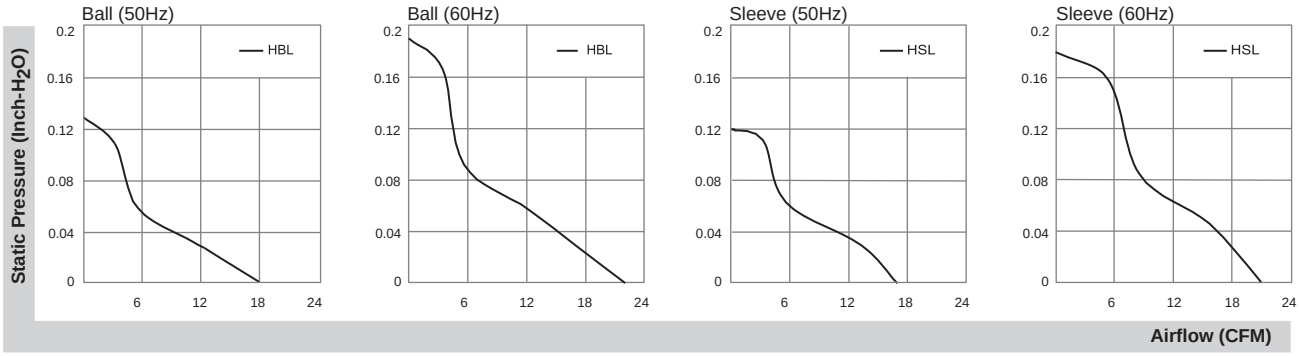

External dimensions(mm)

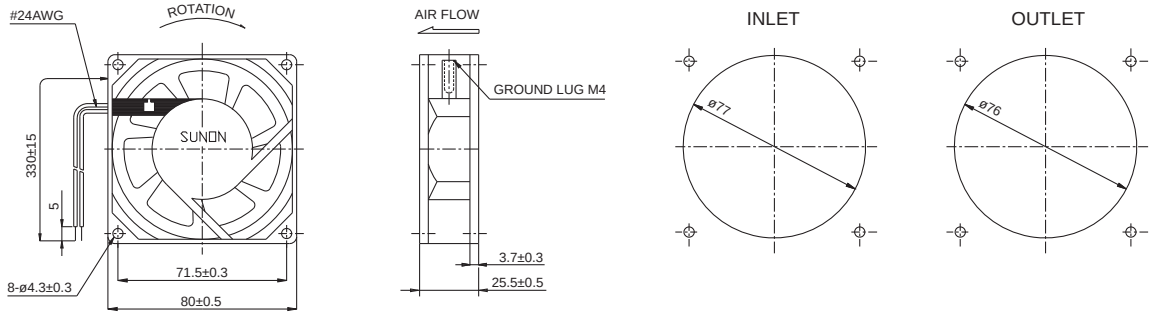

*All model could be customized. Please contact with Sunon Sales.
*Specifications are subject to change without notice. Please Visit SUNON website at http://www.sunon.com for update information.