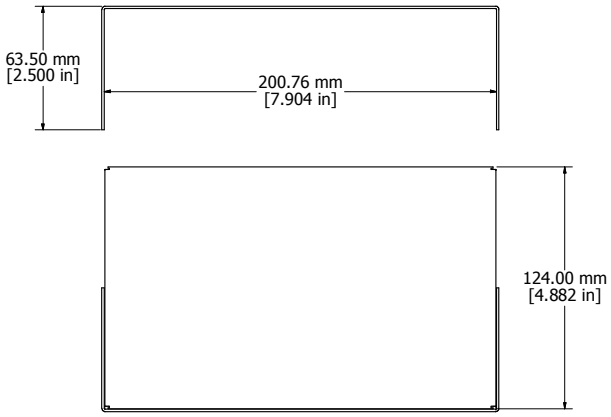

ASSEMBLY - END VIEW (OPEN)

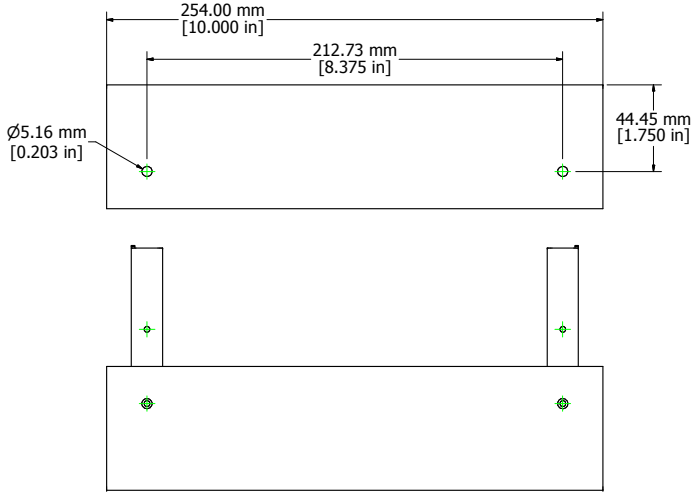

ASSEMBLY - SIDE VIEW (OPEN)

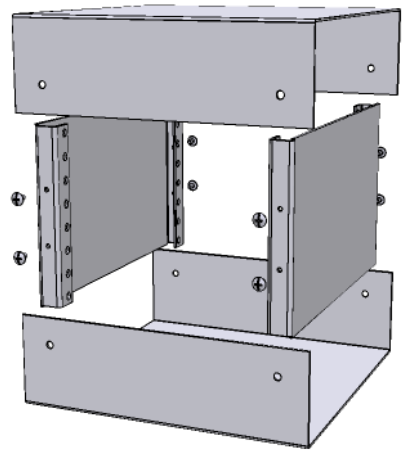

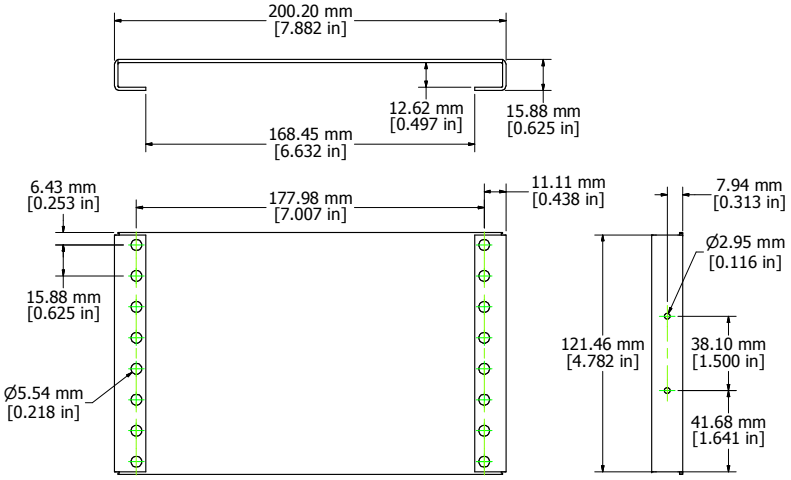

END PLATES

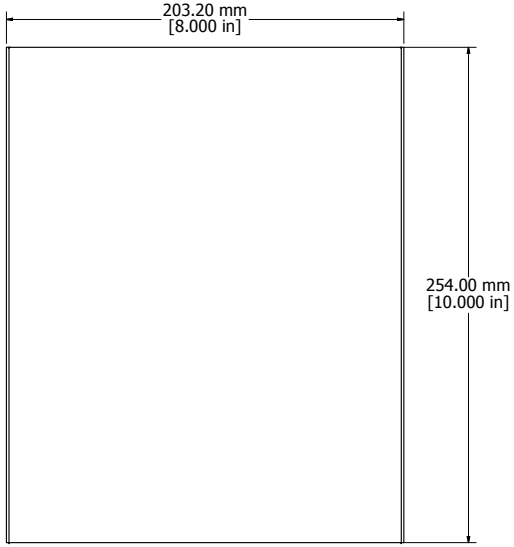

BOTTOM / TOP OF ENCLOSURE

Enclosures can be Factory Modified (Milling, Drilling, Printing etc.)
Contact Factory mjm@hammondmfg.com for quotes
Solid models of this enclosure available in STEP or IGES.

1458E5	
Top/Bottom - 20 ga. Steel	
Powder Coated Black RAL 9011 - **1458E5**	
Powder Coated Gulf Blue RAL 5021 - **1458E5B**	
Front/Rear Panels - .064 Aluminum	
1- Black RAL 9011	1- Grey RAL 7032
8 Screws Self Tapping 632 Philips Nickel Plated	
4 Self Adhesive Rubber Feet Included	
Replacement Screws - 1421-J6 (6 pcs.)	

HAMMOND MANUFACTURING™

1458E5

www.hammondmfg.com