Accessories
Thermowell
For Temperature Sensors
THW-6-G1/2-A4-L100

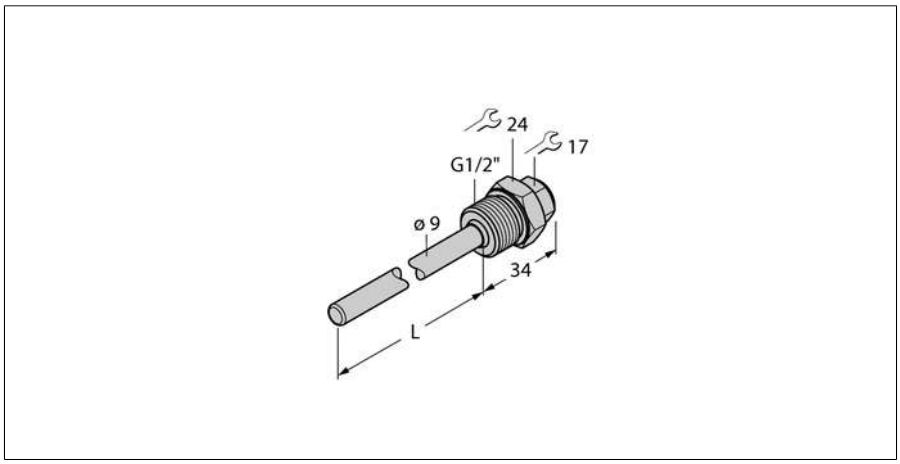

- **Thermowell for mounting temperature probes**
- **End tip diameter 6 mm**
- **Process connection G1/2" male thread**
- **Immersion depth 100 mm**

General description

Thermowells protect the probes against aggressive substances and high pressures. The probes do not come into contact with any media. They can be replaced without interrupting the process.

Type designation	THW-6-G1/2-A4-L100
Ident no.	9910460

Type	THW-6-G1/2-A4-L100
Ident. no.	9910460

Temperature range	
Measuring range	-50…350 °C
Temperature operating range	-58…662 °F
Immersion depth (L)	100 mm

Housing	
Housing material	Stainless steel
Internal diameter	6.2 mm
Process connection	G 1/2" male thread
Pressure resistance	400 bar
Max. tightening torque of housing nut	100 Nm

Edition • 2020-11-24T09:34:37+01:00

Hans Turck GmbH & Co.KG ● D-45472 Mülheim an der Ruhr ● Witzlebenstraße 7 ● Tel. 0208 4952-0 ● Fax 0208 4952-264 ● more@turck.com ● www.turck.com