

Part no. M22-FLED-R
Article no. 180798
Catalog No. M22-FLED-R

Powering Business Worldwide

Delivery programme

Product range			RMQ-Titan (drilling dimensions 22.5 mm)
Basic function			LED elements
Single unit/Complete unit			Single unit
Fixing			Front fixing
Connection technique			Push in terminals
Rated operational voltage	U_e	V	12 - 30 V AC/DC, 50/60 Hz (Standard 24 V AC/DC)
Rated operational current	I_e	mA	8 - 15
Power consumption	$P_{max.}$	W	0.26
			at 24 V
Colour			
			red
Degree of Protection			IP20
Connection to SmartWire-DT			no

Notes

For indicator lights, illuminated pushbutton actuators, and illuminated selector switch actuators, the following applies:

M22…-R only in combination with M22-FLED…-R

M22…-G only in combination with M22-FLED…-G

M22…-W only in combination with M22-FLED…-W

M22…-Y only in combination with M22-FLED…-W

M22…-B in combination with M22-FLED…-W or M22-FLED…-B

Technical data

General

Standards			IEC 60947-5-1
Climatic proofing			Damp heat, constant, to IEC 60068-2-78 Damp heat, cyclic, to IEC 60068-2-30 Dry heat to IEC 60068-2-2
Ambient temperature			
Open		°C	-25 - +70
Storage		°C	- 40 - + 85
Mounting position			As required
Terminal capacities		mm^2	
Solid		mm^2	1 x 1 (0.2 - 1.5) 1 x 1 (075 - 1.5) Can be plugged without tools
Stranded		mm^2	1 x 1 (0.2 - 1.5)

nur zum internen Gebrauch
only for internal use

Flexible with ferrule		mm^2	1 x 1 (0.25 - 1) Use WAGO Variocrimp 4 crimping tool; please enquire for others
Solid or stranded		AWG	1 x 1 (24 - 16)

Contacts

Rated impulse withstand voltage	U_{imp}	V AC	4000
Rated insulation voltage	U_i	V	250
Overvoltage category/pollution degree			III/3
Indoor and protected outdoor installation			

Design verification as per IEC/EN 61439

Technical data for design verification			
Operating ambient temperature min.		°C	-25
Operating ambient temperature max.		°C	70

Dimensions

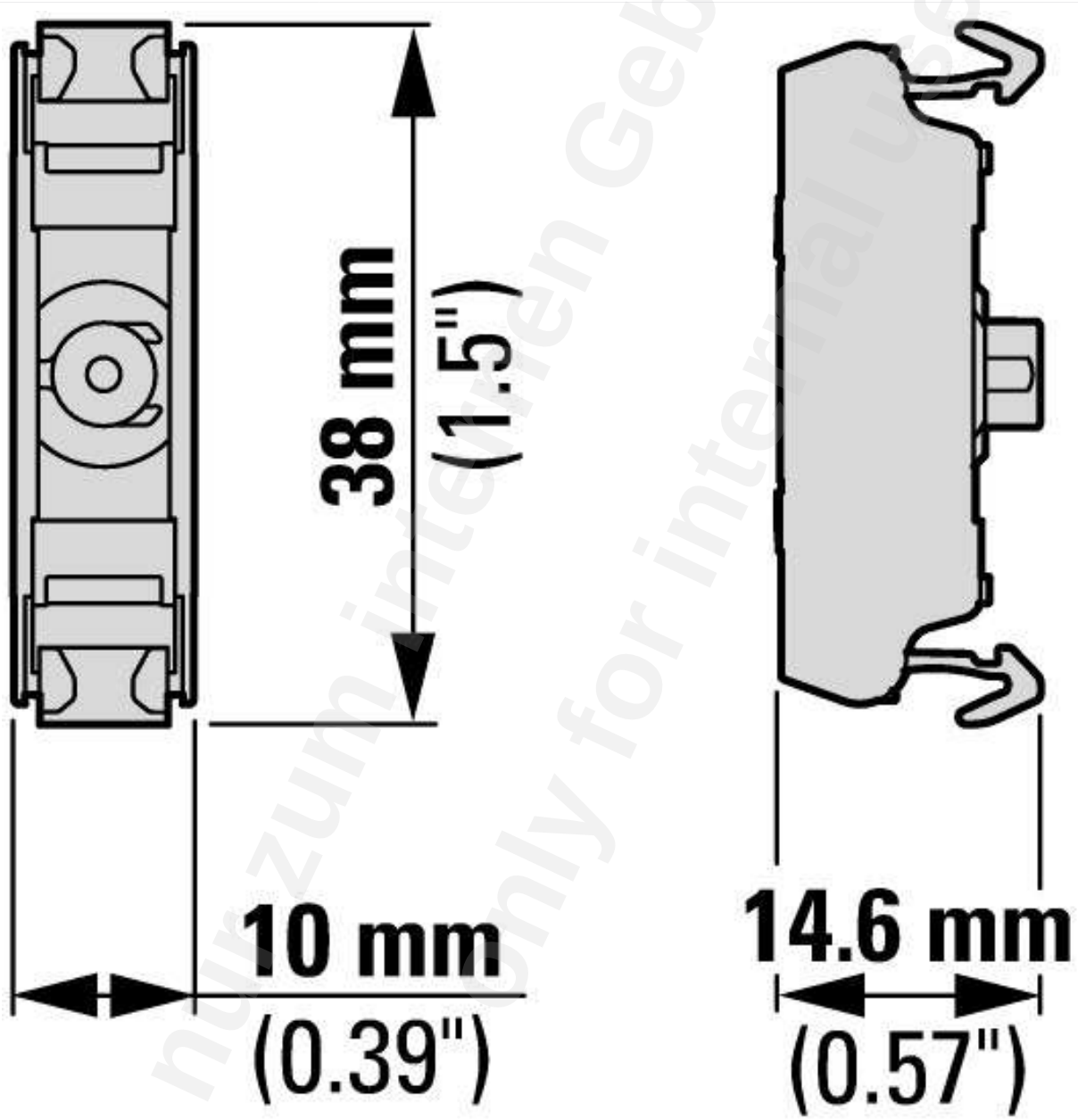

nur zum internen Gebrauch
only for internal use

© 06/2014 by Eaton Industries GmbH