SRA3 Series
Three Phase Solid State Relay



- High load voltage - up to 480VAC
- 4 - 32VDC or 90 - 250VAC Control voltage
- Zero crossover switching
- LED Control input indicator
- Captive finger protection covers for terminals

E325835 RoHS Compliant

Output (Load)

Load type		3PST-NO (3 N/O) Resistive
Load current		10A, 20A, 25A, 30A, 40A, 60A or 80A
Load switching voltage	AC V_{rms}	24 ~ 240V, 40 ~ 480V
Maximum peak voltage	AC V_{pt}	900V
Minimum load current		0.1A
Inrush current (max.)	10ms	20A: 240A / 25A: 300A / 30A: 380A
I^2t	A^2s	20A: 288 / 25A: 450 / 30A: 660
		40A: 880 / 60A: 2100 / 80A: 4050
Switch type		Zero crossover (consult factory for Random)

Input (control)

Control voltage	V	DC: 4 ~ 32 or AC: 90 ~ 250
Control current	mA	<20
Turn-on voltage (min.)	V_{min}	DC: 3.5 / AC: 90V
Turn-on voltage (max.)	V_{max}	DC: 35 / AC: 250V
Turn-off voltage	V	DC: 1 / AC: 10

Environmental

Dimensions	L x W x H	106 x 75 x 38mm
Weight	approx.	Various 365g (10A) ~ 500g (80A)

Note:

All SSR's should be protected by fast acting "semiconductor" fuses.

Circuit breakers and normal fuses are not quick enough to protect the SSR in the event of a current surge or spike"

It is recommended that load power is kept to no more than 70% of the SSR's rating to avoid un-expected issues in the event of variations in the load and ambient temperature" These SSR's are designed to be used with a suitable heat sink.

Transfer Pads and Heatsinks for Durakool SSR relays can be found in Durakool's Solid State Relay (SSR) catalogue.

Ordering Code

S R A 3 Z - 2 5 K - D

Series

Switching

Z: Zero Crossover

Load current

10: 10A
20: 20A
25: 25A
30: 30A
40: 40A
60: 60A
80: 80A

Load voltage

K: 40 to 480VAC
L: 24 to 240VAC

Control voltage input

A: AC
D: DC

Schematic — Fig. 1

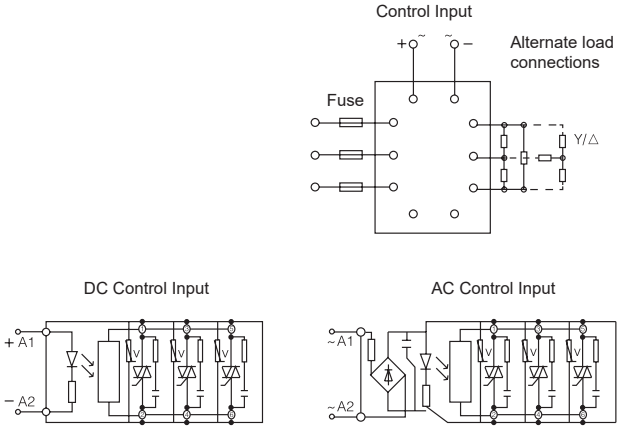

Dimensions mm — Fig. 2

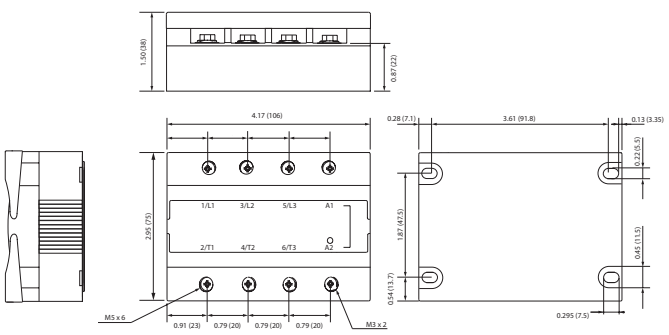

SRA3 041222JHM

Specifications are subject to change without notice. E&OE.