

# Retroreflective sensor

## VL18-54-M-LAS/40a/118/128

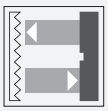

- M18 threaded housing made of brass, nickel plated
- Visible red light, pulsed LASER light
- Array control panel with highly visible LED display
- Flashing power on LED in case of short-circuit
- Multiple device installation possible, no mutual interference (no cross-talk)
- Not sensitive to ambient light, even with switched energy saving lamps
- Protection class II

Retroreflective sensor with polarization filter

## Dimensions

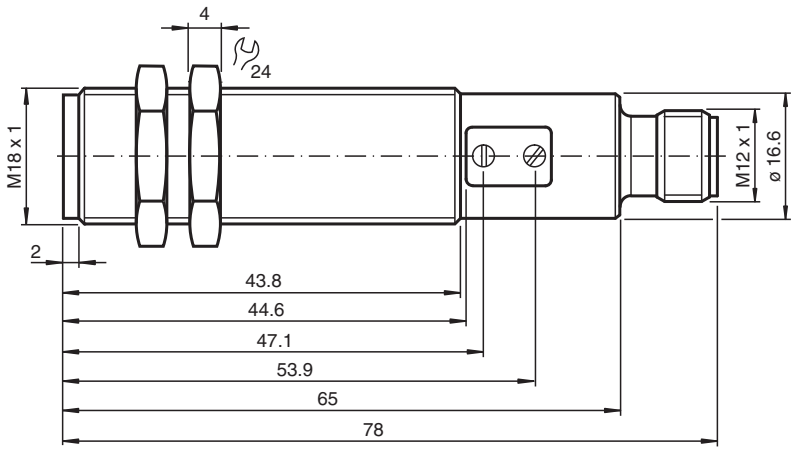


Release date: 2022-08-08 Date of issue: 2022-08-08 Filename: 800182_eng.pdf

## Technical Data

| | | |
|---|---|---|
| **General specifications** | | |
| Effective detection range | | 0 ... 18 m |
| Reflector distance | | 0.06 ... 18 m |
| Threshold detection range | | 20 m |
| Reference target | | H85 reflector |
| Light source | | laser diode |
| Light type | | modulated visible red light |
| Polarization filter | | yes |
| Laser nominal ratings | | |
| Note | | LASER LIGHT , DO NOT STARE INTO BEAM |
| Laser class | | 1 |
| Wave length | | 655 nm |
| Beam divergence | | 7.5 mrad |
| Pulse length | | 4 µs |
| Repetition rate | | 11.91 kHz |
| max. pulse energy | | 2.25 nJ |
| Diameter of the light spot | | 150 mm x 100 mm at a distance of 12 m |
| Opening angle | | 1 ° |
| Optical face | | frontal |
| Ambient light limit | | 30000 Lux |
| Hysteresis | H | < 15 % |
| **Functional safety related parameters** | | |
| $MTTF_d$ | | 700 a |
| Mission Time ($T_M$) | | 20 a |
| Diagnostic Coverage (DC) | | 0 % |
| **Indicators/operating means** | | |
| Operation indicator | | LED green, flashes in case of short-circuit |
| Function indicator | | LED yellow, light with free light beam , flashes when falling short of the stability control , OFF when light beam is interrupted |
| Control elements | | Sensitivity adjuster, light/dark switch |
| **Electrical specifications** | | |
| Operating voltage | $U_B$ | 10 ... 30 V DC , class 2 |
| No-load supply current | $I_0$ | < 20 mA |
| Protection class | | II , rated voltage ≤ 50 V AC with pollution degree 1-2 according to IEC 60664-1 |
| **Output** | | |
| Switching type | | light/dark on, switchable |
| Signal output | | Push-pull (4 in 1) output short-circuit protected overvoltage protected |
| Switching voltage | | max. 30 V DC |
| Switching current | | max. 200 mA |
| Voltage drop | $U_d$ | ≤ 2.5 V DC |
| Switching frequency | f | 500 Hz |
| Response time | | 1 ms |
| **Conformity** | | |
| Product standard | | EN 60947-5-2 |
| **Compliance with standards and directives** | | |
| Standard conformity | | |
| Laser class | | IEC 60825-1:2007 Complies with 21 CFR 1040.10 and 1040.11 except for deviations pursuant to Laser Notice No. 50, dated June 24, 2007 |
| **Approvals and certificates** | | |
| EAC conformity | | TR CU 020/2011 |
| UL approval | | cULus Listed, Type 1 enclosure |
| CCC approval | | CCC approval / marking not required for products rated ≤36 V |
| **Ambient conditions** | | |
| Ambient temperature | | -25 ... 55 °C (-13 ... 131 °F) |

Release date: 2022-08-08 Date of issue: 2022-08-08 Filename: 800182_eng.pdf

## Technical Data

| | | |
|---|---|---|
| Storage temperature | | -30 ... 70 °C (-22 ... 158 °F) |
| **Mechanical specifications** | | |
| Degree of protection | | IP67 |
| Connection | | 4-pin, M12 x 1 connector |
| Material | | |
| Housing | | brass, nickel-plated |
| Optical face | | PMMA |
| Mass | | 60 g |

## Connection Assignment

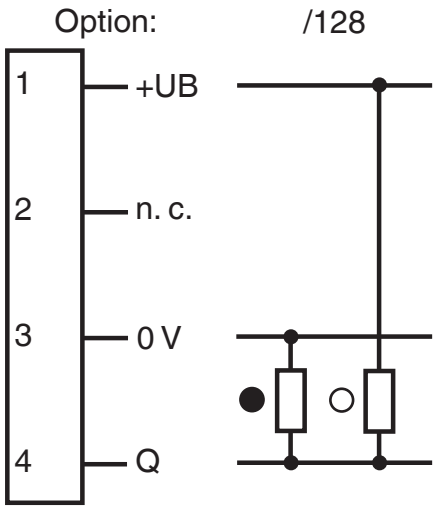


○ = Light on
● = Dark on

## Connection Assignment

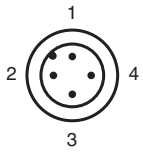


Wire colors in accordance with EN 60947-5-2

| | | |
|---|---|---|
| 1 | BN | (brown) |
| 2 | WH | (white) |
| 3 | BU | (blue) |
| 4 | BK | (black) |

Release date: 2022-08-08 Date of issue: 2022-08-08 Filename: 800182_eng.pdf

## Characteristic Curve

### Characteristic response curve

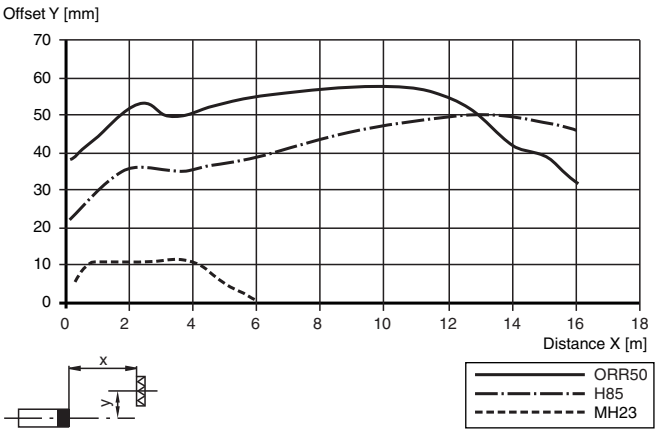


### Relative received light strength

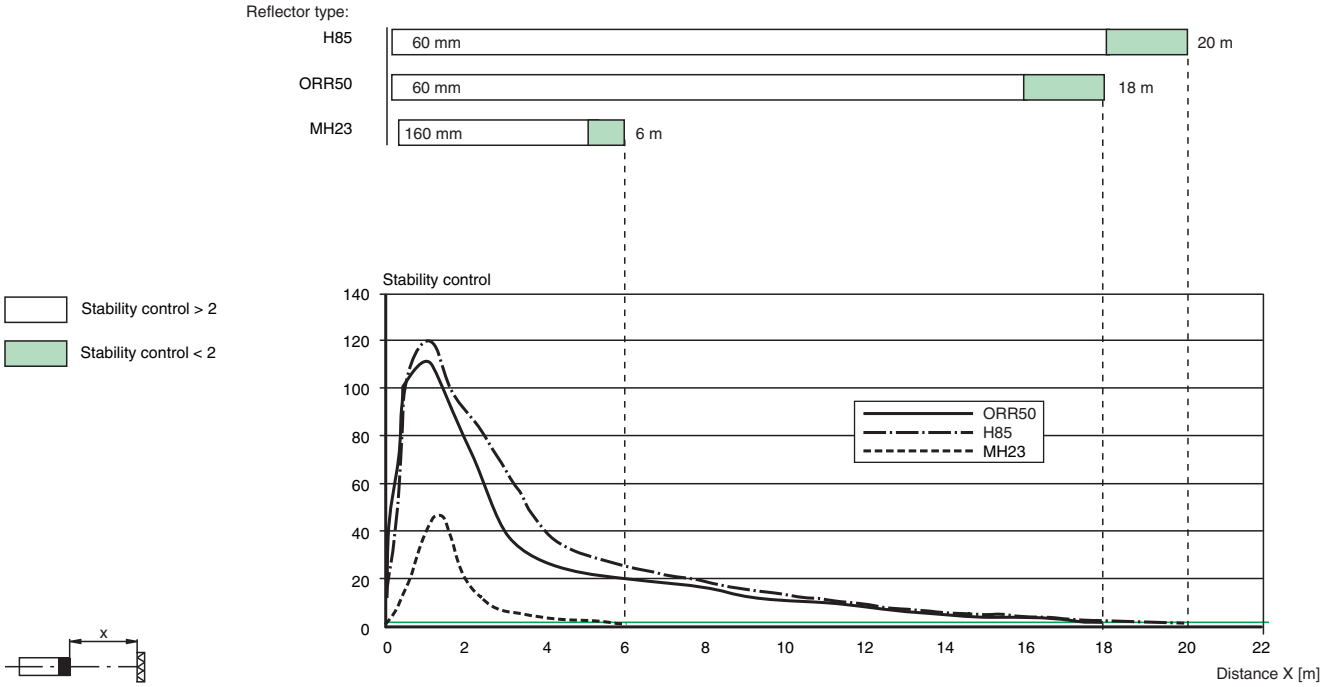


## Safety Information

**Laser Class 1 Information**
The irradiation can lead to irritation especially in a dark environment. Do not point at people!
Maintenance and repairs should only be carried out by authorized service personnel!
Attach the device so that the warning is clearly visible and readable.
The warning accompanies the device and should be attached in immediate proximity to the device.
Caution – Use of controls or adjustments or performance of procedures other than those specified herein may result in hazardous radiation exposure.

## Accessories

| | | |
|---|---|---|
|  | **OMH-VL18** | Mounting Bracket with swivel nut |
|  | **BF 18** | Mounting flange, 18 mm |
|  | **BF 18-F** | Plastic mounting adapter, 18 mm |

Release date: 2022-08-08 Date of issue: 2022-08-08 Filename: 800182_eng.pdf

## Accessories

| | | |
|---|---|---|
|  | **BF 5-30** | Universal mounting bracket for cylindrical sensors with a diameter of 5 ... 30 mm |
|  | **REF-MH23** | Reflector with Micro-structure, rectangular 23 mm x 13.8 mm, diagonal mounting hole |
|  | **REF-H100** | Reflector, rectangular 122 mm x 99.35 mm, mounting holes |
|  | **REF-H85-2** | Reflector, rectangular 84.5 mm x 84.5 mm, mounting holes |
|  | **REF-H50** | Reflector, rectangular 51 mm x 61 mm, mounting holes, fixing strap |

Release date: 2022-08-08 Date of issue: 2022-08-08 Filename: 800182_eng.pdf