268 HANDHELD CASES
292 UNIVERSAL ENCLOSURES
318 HEAVY DUTY AND ELECTRICAL ENCLOSURES
342 DESKTOP AND INSTRUMENT CASES
348 DEVELOPMENT BOARD ENCLOSURES
367 VERSATILE IOT AND SENSOR ENCLOSURES
370 CUSTOM SIZED ENCLOSURES

Hex-Box IoT enclosure

Product overview

This UK manufactured Hex-Box has been designed with customisation and user flexibility at heart. The 100% recyclable housing features six self-retaining panels which you can mix and match to suit your requirement. The enclosure offers huge connector access and air flow benefits, ideal for industrial IoT settings. The design features and modern aesthetic create the perfect enclosure for walls (when paired with the wall mount bracket) or desktops (when paired with the rubber feet), each sold separately.



Key features

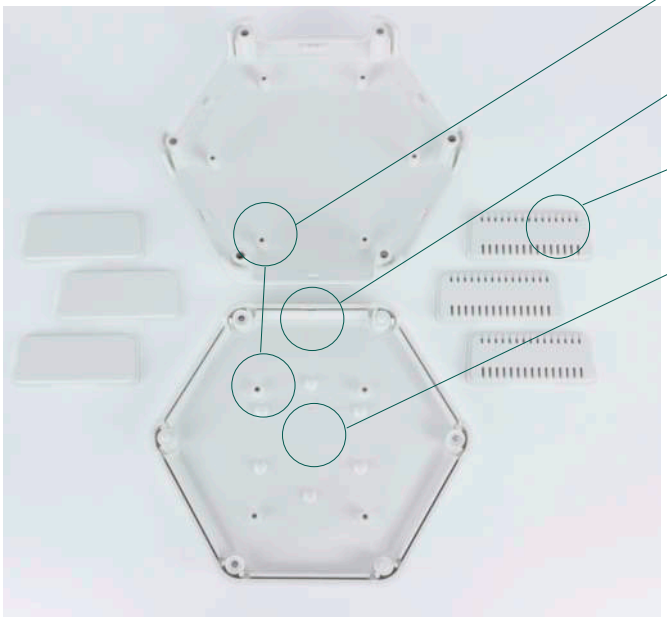

PCB mounting in the top and base
Six bosses in the top, four in the base with Raspberry Pi mountable footprint

Number index in base
Aids wall mounting

Self-retaining removable end panels
Allows cable entries from all sides. Panels can be easily customised and are available as either solid or vented

Guide for cable knock-out
Aids customisation with alignment of wall mount bracket

Smooth bevelled lid with flat top
Suitable for a 2.5" screen and perfect for digital printing



RANGE SPECIFICATION

STANDARD UNIT INCLUDES	Base, top, 6 x panels, 3 x 16mm thread forming (Pozi CSK) screws			
MATERIALS	Base	UL94-V0 ABS		
	Top	UL94-V0 ABS		
	Screws	BZP (Bright Zinc Plated Steel)		
COLOURS	Grey	RAL7047		
	Black	RAL9005		
	White	RAL9003		
COMPLIANCE	RoHS compliant			
OPERATING TEMPERATURE	-10°C to +80°C			
TEST RESULTS	**Standard**	**Test**	**Result**	**Test report**
	EN 62262	Impact test	IK07	TR112
	BS EN 60529	IP code	Vented: IP30 Solid: IP40	TR110
SCREW TORQUE	Pozi CSK screws		0.3Nm	
PURCHASING INFORMATION	Country of origin		Great Britain (GB)	
	Commodity code		3923101000	
	Weight		120g	
	Enclosure type		Versatile sensor and IoT enclosures	
OPTIONS	For alternative colours and materials MOQs will apply			

PCB positions

PCB MOUNTING POSITION	MAXIMUM PCB DIMENSION
BASE	122.2mm Hex A/F
TOP	121.8mm Hex A/F

When using a 1.6mm thick PCB, you will need No.4x6.5mm self-tapping screws (not supplied)

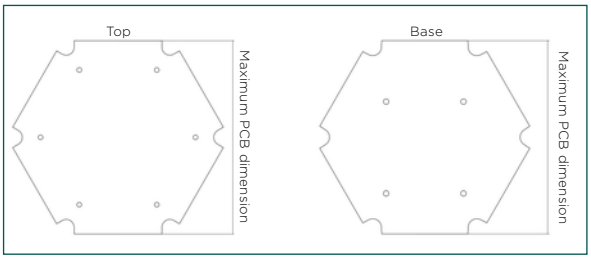

Enclosure dimensions

EXTERNAL (LxWxH)	INTERNAL (LxWxH)	WALL THICKNESS
146 x 130 x 45 mm	122.5 x 125.5 x 34.5 mm	2.5 mm

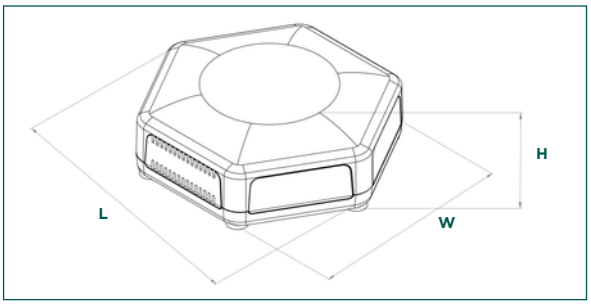

Potential industries / applications

Industrial IoT, smart home, smart office, retail, speaker/ alarm buzzer, meeting room device, network equipment, environmental sensor equipment, development board electronics.

+44 (0)1638 716101 | sales@camdenboss.com | www.camdenboss.com

We operate a constant improvement policy, our products are subject to change without notice.

Vers 1

bsi ISO 9001 Quality Management Systems CERTIFIED
FM 28614

CHOOSE YOUR ENCLOSURE COMBINATION				
OPTION	DESCRIPTION	GREY (GY)	BLACK (BK)	WHITE (WH)
Option 1	1 x enclosure and 6 x solid panels	CBHEX1-60-GY	CBHEX1-60-BK	CBHEX1-60-WH
Option 2	1 x enclosure, 5 x solid panels and 1 x vented panel	CBHEX1-51-GY	CBHEX1-51-BK	CBHEX1-51-WH
Option 3	1 x enclosure, 4 x solid panels and 2 x vented panels	CBHEX1-42-GY	CBHEX1-42-BK	CBHEX1-42-WH
Option 4	1 x enclosure, 3 x solid panels and 3 x vented panels	CBHEX1-33-GY	CBHEX1-33-BK	CBHEX1-33-WH
Option 5	1 x enclosure, 2 x solid panels and 4 x vented panels	CBHEX1-24-GY	CBHEX1-24-BK	CBHEX1-24-WH
Option 6	1 x enclosure, 1 x solid panels and 5 x vented panels	CBHEX1-15-GY	CBHEX1-15-BK	CBHEX1-15-WH
Option 7	1 x enclosure and 6 x vented panels	CBHEX1-06-GY	CBHEX1-06-BK	CBHEX1-06-WH
Option 8	1 x enclosure, 2 x customised solid panels to accommodate Raspberry Pi4, 2 x solid panels and 3 x vented panels	CBHEX1-PI4-GY	CBHEX1-PI4-BK	CBHEX1-PI4-WH

Desk mount accessory

Product overview

The six rubber feet (CBHEX-FEET) turn your Hex-Box IoT Enclosure into a tabletop enclosure. Simply push the feet into the holes in the base of the Hex-Box IoT Enclosure.

RUBBER FEET (6PCS)
CBHEX-FEET



Rubber feet



Wall mount accessory

Product overview

Transform your Hex-Box IoT Enclosure into a wall mountable enclosure with the Circular Wall Mount Bracket. This revolutionary circular mounting bracket is packed full of mounting options and offers seamless and discrete mounting to retain the modern aesthetic look of your housing, whilst gaining additional functionality.

Circular Wall Mount Bracket



Key features

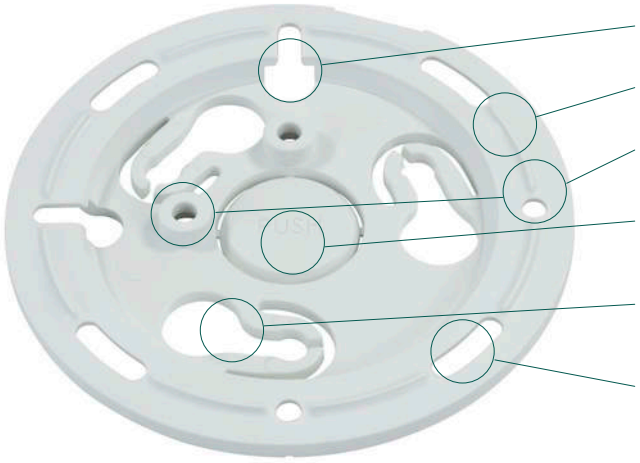

2 x keyhole mounting slots
Allow for quick and easy wall mounting

Raised rib stand-offs
Help with stability of the enclosure on uneven walls

2 x sets of UK single gang back box mounting points
In two off centre orientations

25mm cable entry knock-out for cable management
Customisation required to the enclosure base, using the guide provided

Easy installation
Screw the lugs to the enclosure, twist 30 degrees and your bracket is attached

4 x static mount points/slots
Provides easy and flexible wall mount fitting

CIRCULAR WALL MOUNT BRACKET			
GREY (GY)	BLACK (BK)	WHITE (WH)	INCLUDED
CBWMC-GY	CBWMC-BK	CBWMC-WH	1 x circular wall mount bracket, 3 x screws, 3 x lugs

RANGE SPECIFICATION		
MATERIAL	Wall mount bracket	UL94-V0 ABS
	Wall mount lugs	UL94-V0 ABS
	Screws	BZP (Bright Zinc Plated Steel)
DIAMETER	98.3 mm	
PURCHASING INFORMATION	Country of origin	Great Britain (GB)
	Commodity code	3923101000
	Weight	23.6g



268 HANDHELD CASES
292 UNIVERSAL ENCLOSURES
318 HEAVY DUTY AND ELECTRICAL ENCLOSURES
342 DESKTOP AND INSTRUMENT CASES
348 DEVELOPMENT BOARD ENCLOSURES
367 VERSATILE IOT AND SENSOR ENCLOSURES
370 CUSTOM SIZED ENCLOSURES