Safety switch

Series Safety Hinge Switch SHS3

Description **SHS3-U15Z-KA 5 L** Article number **6019390023**

Operating symbol

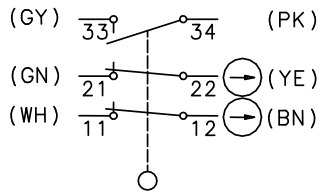

Operating diagram

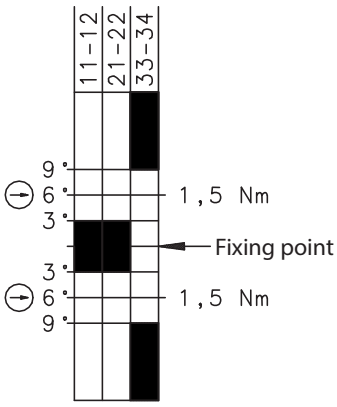

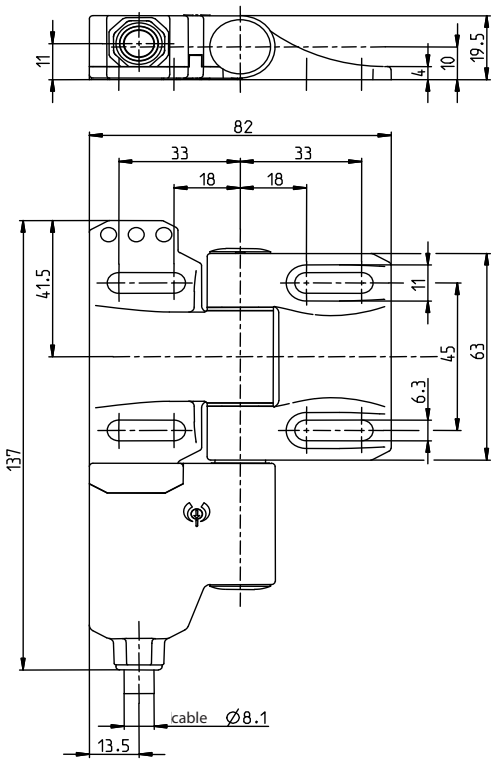

Point of fixation is in range of 0° ... 270° free selectable.

ON OFF

Tolerances:
switching angle (opening) ±1,5 °,
direct opening torque 10 %,
direct opening angle + 2 °

Swivel angle 0° to 270°

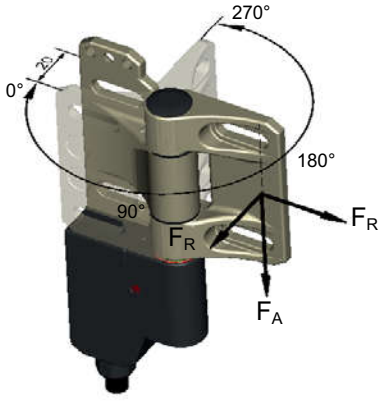

Electrical Data		
Rated insulation voltage	U_i	250 V
Conv. thermal current	I_{the}	5 A
Rated operational voltage	U_e	230 V AC; 24 V DC
Utilization category		AC-15, U_e /I_e 230 V / 3 A; DC-13, U_e /I_e 24 V / 1 A
Direct opening action	⊖	acc. to IEC/EN 60947-5-1, annex K
Short-circuit protective device		Fuse 4 A gG
Protection class		II (totally insulated)

Mechanical data	
Enclosure	PBT
Hinge	Cast stainless steel
Ambient air temperature	-25 °C to +70 °C (connecting cable permanently mounted; no freezing over / no condensation)
Contact type	Slow make and break contacts 2 N.C., 1 N.O.
Mechanical life	1 x 10^6 operating cycles
Switching frequency	max. 300 switching operations / hour
Attachment	4 x M6 screws DIN EN ISO 7984 (on flat and stiff ground)
Wiring	Fixed connecting cable 6 x 0,75 mm^2 x 5 m Bending radius = 60 mm min.
Weight	≈ 0,65 kg
Installation position	operator definable
Protection type	IP 67 in acc. with IEC/EN 60529
Switching angle	+/- 3 ° from fixing point for the N.C. contacts and 9° for the N.O. contact
Forced disconnect angle	6°+2° from fixation point in both directions (for 0°-3° only in Plus-direction, for 267°-270° only in Minus-direction)
Forced disconnect torque	1,5 Nm
Mechanical load (see dimensioned drawing for the introduction direction of the forces)	F_{R1}= max. 1800 N F_{R2}= max. 750 N F_A = max. 1800 N

ID for safety engineering	
B10d	2 x 10^6 cycles

Standards	
	VDE 0660 T100, DIN EN 60947-1, IEC 60947-1
	VDE 0660 T200, DIN EN 60947-5-1, IEC 60947-5-1
	DIN EN ISO 13849-1

EU Conformity	
	acc. to directive 2006/42/EC

Approvals	
	DGUV
	CCC
	$_C$CSA$_{US}$ B300

Notes
The safety guard shall always be mounted using two SHS3 at least! See max. load. If the risk assessment of the machine permits a single-channel monitoring a blank hinge can used as bearing element. High forces, unfavourable force application as well as dynamic loads can shorten the service life. In case that the SHS3 is used at an ambient temperature of 70° an accelerated ageing of the connecting cable can occur. The connecting cable shall be protected against mechanical damages. The installation of the connecting cable can be done via pipes or cable ducts. The manufacturer / supplier of the machine / equipment is obliged to take the applicable standards for the calculation of the safety distances of separating safety guards to hazardous areas into account. Especially these standards apply: DIN EN 349, DIN EN 953, DIN EN ISO 14119, DIN EN ISO 13857 ... . The switch shall not be used as a mechanical stop.