Horns and Sirens / Vocal alarm

Vocal alarm WM 24VDC BK



Part No.: 154.000.55

MECHANICAL DATA	
Length	111 mm
Width	111 mm
Height	98 mm
Materials	PC/ABS
Housing colour	Black
Protection category	IP65
Connection	Screw terminals
cross-sectional area minimum	0,25mm² / 24AWG
cross-sectional area maximum	1,50mm² / 16AWG
Cable entry	Through hole
Cable entry maximum	d = 11 mm
Type of fixing	Wall mounting
Working temperature minimum	-20°C
Working temperature maximum	+55°C
Weight with packaging	760 g
Product weight	690 g

ELECTRICAL DATA	
Operating voltage	24V
Operating voltage type	DC
Operating voltage tolerance	+/- 10%
Rated operational voltage	24 VDC
Rated operational current	1500 mA
Rated inrush current	500 mA
Protection class	Protection class 2
Pollution degree	3

OPTICAL DATA	
Service life optical	5,000 h minimum

ACUSTICAL DATA	
Volume (max) at 1m distance	110,0 dB (A)
Acoustic service life	5,000 h minimum

APPROVAL DATA	
Conforms with CE	Yes
WEEE	Yes
Conforms with ATEX-directive	No
Conforms with CCC	No
Conforms with UL	No

! For additional installation and mounting information, refer to the appropriate user guide at www.werma.com. This printed copy is for information only and is subject to alteration.

Horns and Sirens / Vocal alarm

Vocal alarm WM 24VDC BK

Conforms with FCC	No
Conforms with IC	No
EAC certificate available	Yes
Conforms with AS-I	No
ICAO Certification	No
Conforms with DNV	No
Conforms with RoHS CN	No
Conforms with VdS	No

DRAWING

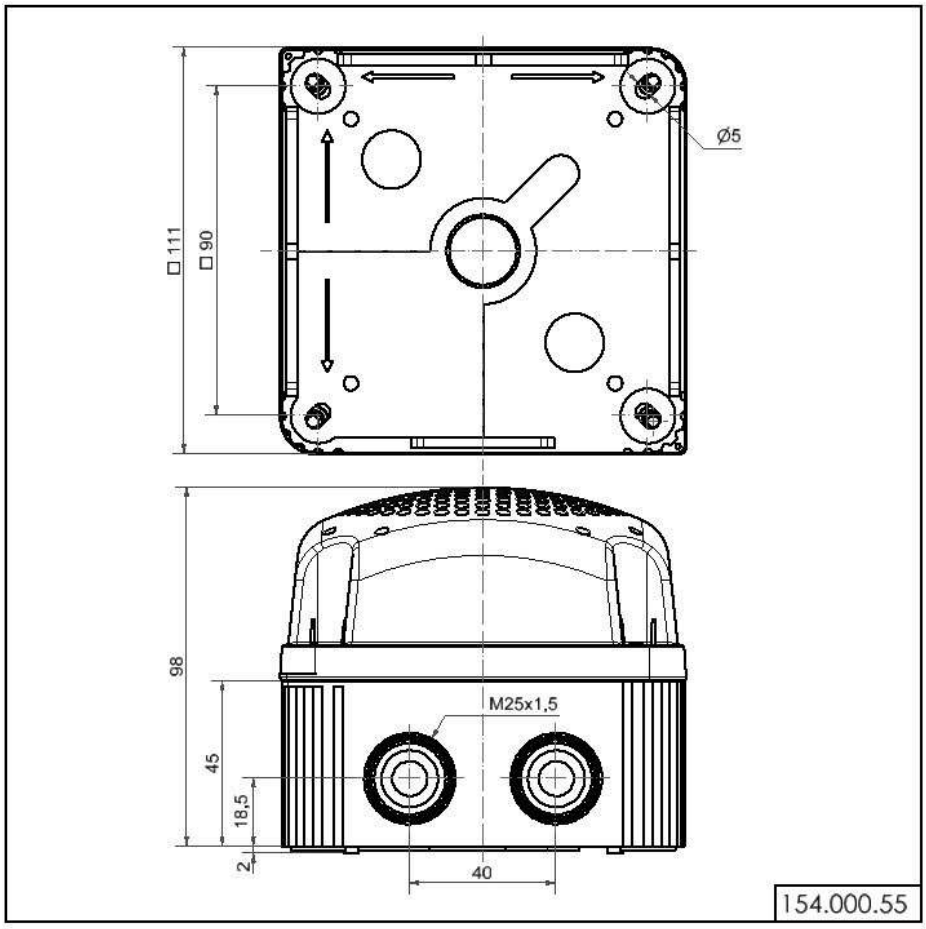

! For additional installation and mounting information, refer to the appropriate user guide at www.werma.com. This printed copy is for information only and is subject to alteration.