HYGRASGARD® RFF
HYGRASGARD® RFTF

Room humidity and temperature sensors (± 2.0 %), on-wall, calibratable, with active / passive output

S+S REGELTECHNIK

The calibratable room humidity and temperature sensor **HYGR**ASGARD® **RFF/RFTF** measures the relative humidity and/or temperature of air. It converts the measurands humidity and temperature into standard signals of 0 -10 V or 4...20 mA and is available with or without an optional display (for displaying actual humidity and actual temperature) in an elegant housing made of plastic, with snap-on lid, base with 4-hole attachment for installation on vertically or horizontally installed in-wall flush boxes, with predetermined breaking point for on-wall cable entry. The relative humidity (in % RH) is the quotient of water vapour partial pressure divided by the saturation vapour pressure at the respective gas temperature.

It is used in non-aggressive dust-free atmospheres in refrigeration, air conditioning, ventilation and clean room technology, in interior rooms such as residential rooms, offices, hotels, technical rooms, meeting rooms and convention centres. These measuring transducers are designed for exact detection of air temperature and humidity. A digital long-term stable sensor is used as a measuring element for humidity and temperature measurement. Fine adjustment by the user is possible.

TECHNICAL DATA

Power supply:	24 V AC (± 20 %) and 15...36 V DC for U variant 15...36 V DC for I variant, depending on working resistance, residual ripple stabilised ± 0.3 V
Working resistance:	R_a (ohm) = (U_b -14 V) / 0.02 A for I variant
Load resistance:	R_L > 5 kOhm for U variant
Power consumption:	< 1.1 VA / 24 V DC ; < 2.2 VA / 24 V AC
Sensors:	**digital humidity sensor** **with integrated temperature sensor,** small hysteresis, high long-term stability
HUMIDITY	
Measuring range, humidity:	0...100 % RH (output corresponding to 0 -10 V or 4...20 mA)
Operating range, humidity:	0 ... 95 % RH (non-precipitating air)
Deviation, humidity:	typically **± 2.0** % (20...80 % RH) at +25 °C, otherwise ± 3.0 %
Output, humidity:	0 -10 V for U variant 4...20 mA for I variant, working resistance < 800 Ω, see load resistance diagram
TEMPERATURE	
Measuring range, temperature:	0...+ 50 °C (output corresponding to 0 -10 V or 4... 20 mA or Ohm value) others upon request!
Operating range, temperature:	0...+ 50 °C
Deviation, temperature:	typically ± 0.2 K at +25 °C
Output, temperature:	0 -10 V or 4 ... 20 mA or Ohm value
Ambient temperature:	storage –25...+50 °C, operation –5...+55 °C
Electrical connection:	2-, 3- or 4-wire connection (see connecting diagram) 0.14 -1.5 mm² via terminal screws
Housing:	plastic, material ABS, colour pure white (similar to RAL 9010)
Housing dimensions:	85 x 85 x 27 mm (Baldur 1)
Installation:	wall mounting or on in-wall flush box, Ø 55 mm, base with 4-hole for mounting on vertically or horizontally installed in-wall flush boxes for cable entry from the back, with predetermined breaking point for on-wall cable entry from top / bottom in case of plain on-wall installation
Long-term stability:	±1 % per year
Protection class:	III (according to EN 60 730)
Protection type:	**IP 30** (according to EN 60 529)
Standards:	CE conformity, according to EMC directive 2014 / 30 / EU, according to EN 61326-1, according to EN 61326-2-3
Optional:	two-line display with illumination, 36 x 15 mm (W x H), for displaying ACTUAL temperature and / or ACTUAL humidity

The two-line display readout switches between the ACTUAL humidity reading in % RH and the ACTUAL temperature reading in °C.

Backlighting is installed for better instrument readability.

Display Readout **RFTF**



Dimensional drawing
(Baldur 1)

RFF
RFTF

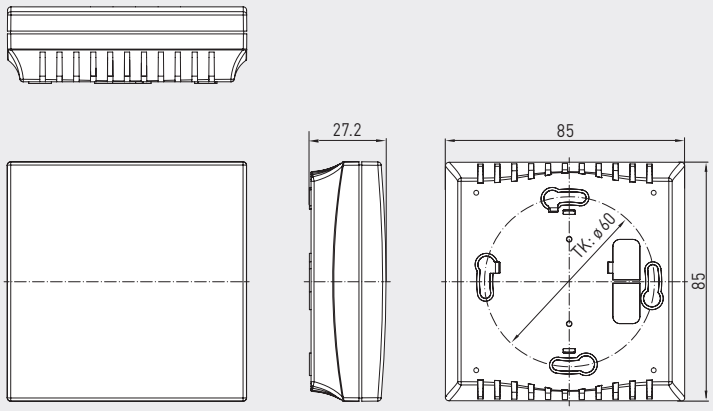

RFF
RFTF



RFF
RFTF
without display



RFF
RFTF
with display

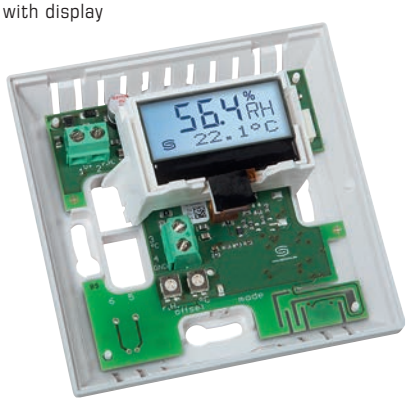

RFF
RFTF
with display



HYGRASGARD® RFF
HYGRASGARD® RFTF

Room humidity and temperature sensors (± 2.0 %), on-wall, calibratable, with active / passive output

S+S REGELTECHNIK

Schematic diagram (Baldur 1)

RFTF-U-x
RFTF-U-x with display

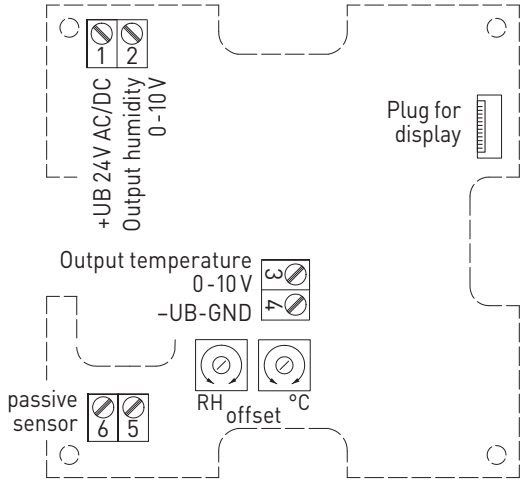

Schematic diagram (Baldur 1)

RFTF-I-x
RFTF-I-x with display

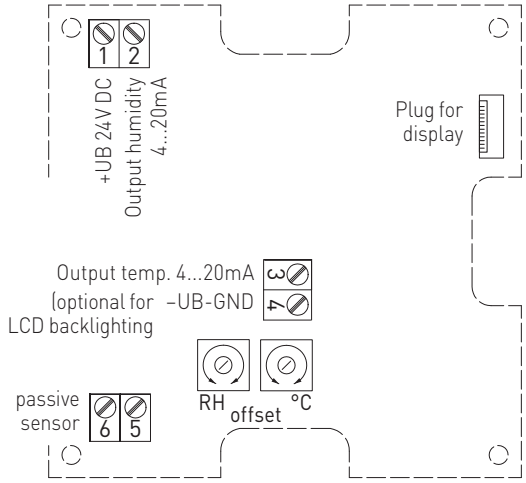

3-wire connection — **RFF-U**

- 1 +UB 24V AC/DC
- 2 Output humidity 0-10V
- 3 Free
- 4 –UB-GND

2- or 3-wire connection * — **RFF-I (Transmitter)**

- 1 +UB 24V DC
- 2 Output humidity 4...20mA
- 3 Free
- 4 –UB-GND (optional for backlighting)

4- or 6-wire connection — **RFTF-U (passive temperature sensor)**

- 1 +UB 24V AC/DC
- 2 Output humidity 0-10V
- 3 Output temperature 0-10V
- 4 –UB-GND
- 5 Passive element
- 6 e.g. Pt1000, Ni1000, LMZ235Z

4-wire connection — **RFTF-U**
RFTF-U with display

- 1 +UB 24V AC/DC
- 2 Output humidity 0-10V
- 3 Output temperature 0-10V
- 4 –UB-GND

3- or 4-wire connection ** — **RFTF-I (Transmitter)**

- 1 +UB 24V DC
- 2 Output humidity 4...20mA
- 3 Output temperature 4...20mA
- 4 –UB-GND (optional for backlighting)

4- or 6-wire connection — **RFTF-I (passive temperature sensor)**

- 1 +UB 24V DC
- 2 Output humidity 4...20mA
- 3 Output temperature 4...20mA
- 4 –UB-GND (optional for backlighting)
- 5 Passive element
- 6 e.g. Pt1000, Ni1000, LMZ235Z

Load resistance diagram 4...20 mA — **RFF / RFTF**

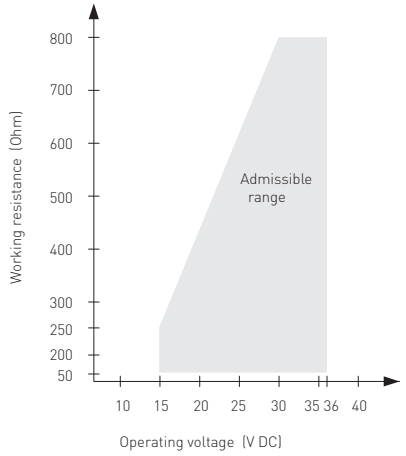

Connection*:
2-wire connection for devices with / without display (not illuminated)
3-wire connection for devices with illuminated display

Connection**:
3-wire connection for devices with / without display (not illuminated)
4-wire connection for devices with illuminated display

At the **I variant** the humidity path must be connected!

Humidity table
MR: 0 ...100 % RH

% RH	U_A [V]	I_A [mA]
0	0	4.0
5	0.5	4.8
10	1.0	5.6
15	1.5	6.4
20	2.0	7.2
25	2.5	8.0
30	3.0	8.8
35	3.5	9.6
40	4.0	10.4
45	4.5	11.2
Continued at the right ...		

% RH	U_A [V]	I_A [mA]
50	5.0	12.0
55	5.5	12.8
60	6.0	13.6
65	6.5	14.4
70	7.0	15.2
75	7.5	16.0
80	8.0	16.8
85	8.5	17.6
90	9.0	18.4
95	9.5	19.2
100	10.0	20.0

Temperature table
MR: 0 ...+50 °C

°C	U_A [V]	I_A [mA]
0	0.0	4.0
5	1.0	5.6
10	2.0	7.2
15	3.0	8.8
20	4.0	10.4
25	5.0	12.0
30	6.0	13.6
35	7.0	15.2
40	8.0	16.8
45	9.0	18.4
50	10.0	20.0

HYGRASGARD® RFF Room humidity sensors
HYGRASGARD® RFTF Room humidity and temperature sensors

Type / WG01	Measuring Range / Readout Humidity	Temperature	Output Humidity	Temperature	Display	Item No. (Baldur 1)	Price
RFF						(active)	
RFF-I	0...100 % RH	–	4...20 mA	–		1201-41A2-0000-000	**122,48 €**
RFF-I **LCD**	0...100 % RH	–	4...20 mA	–	■	1201-41A2-0200-000	**179,64 €**
RFF-U	0...100 % RH	–	0-10 V	–		1201-41A1-0000-000	**122,48 €**
RFF-U **LCD**	0...100 % RH	–	0-10 V	–	■	1201-41A1-0200-000	**179,64 €**
RFTF						(active)	
RFTF-I	0...100 % RH	0...+50 °C	4...20 mA	4...20 mA		1201-41A2-1000-000	**126,29 €**
RFTF-I **LCD**	0...100 % RH	0...+50 °C	4...20 mA	4...20 mA	■	1201-41A2-1200-000	**183,57 €**
RFTF-U	0...100 % RH	0...+50 °C	0-10 V	0-10 V		1201-41A1-1000-000	**126,29 €**
RFTF-U **LCD**	0...100 % RH	0...+50 °C	0-10 V	0-10 V	■	1201-41A1-1200-000	**183,57 €**

HYGRASGARD® RFTF-U xx Room humidity and temperature sensors

Type / WG01	Measuring Range / Readout Humidity	Temperature	Output Humidity	Temperature	Item No. (Baldur 1)	Price
RFTF-U xx	**Pt, Ni, LM235Z**				(active / passive)	
RFTF-U Pt100	0...100 % RH	0...+50 °C	0-10 V	0-10 V + Pt100	1201-41A1-2001-000	**168,18 €**
RFTF-U Pt1000	0...100 % RH	0...+50 °C	0-10 V	0-10 V + Pt1000	1201-41A1-2005-000	**171,65 €**
RFTF-U Ni1000	0...100 % RH	0...+50 °C	0-10 V	0-10 V + Ni1000	1201-41A1-2009-000	**172,82 €**
RFTF-U NiTK	0...100 % RH	0...+50 °C	0-10 V	0-10 V + Ni1000TK5000	1201-41A1-2010-000	**173,07 €**
RFTF-U LM235Z	0...100 % RH	0...+50 °C	0-10 V	0-10 V + LM235Z, 10mV / K	1201-41A1-2021-000	**172,42 €**
RFTF-U xx	**NTC**				(active / passive)	
RFTF-U NTC1,8K	0...100 % RH	0...+50 °C	0-10 V	0-10 V + NTC 1,8 kOhm	1201-41A1-2012-000	**172,96 €**
RFTF-U NTC10K	0...100 % RH	0...+50 °C	0-10 V	0-10 V + NTC 10 kOhm	1201-41A1-2015-000	**169,20 €**
RFTF-U NTC20K	0...100 % RH	0...+50 °C	0-10 V	0-10 V + NTC 20 kOhm	1201-41A1-2016-000	**169,20 €**
Extra charge:	Two-line **display** with illumination					**51,32 €**