Product data sheet
Characteristics

XMLA004A2C11
pressure switch XMLA 4 bar - fixed scale 1 threshold - 1 C/O



Main

Range of product	OsiSense XM
Product or component type	Electromechanical pressure sensor
Pressure sensor type	Electromechanical pressure sensor
Device short name	XMLA
Pressure sensor size	4 bar
Controlled fluid	Air (0...70 °C) Fresh water (0...70 °C) Hydraulic oil (0...70 °C)
Fluid connection type	G 1/4 (female) conforming to ISO 228
Electrical connection	1 male connector EN 175301-803-A (ex DIN43650) 4 pins
Contacts type and composition	1 C/O
Product specific application	-
Pressure switch type of operation	Detection of 1 single threshold
Electrical circuit type	Control circuit
Scale type	Fixed differential
Local display	With
Adjustable range of switching point on rising pressure	0.4...4 bar
Adjustable range of switching point on falling pressure	0.05...3.65 bar
Maximum permissible accidental pressure	9 bar
Destruction pressure	18 bar
Pressure actuator	Diaphragm
Materials in contact with fluid	FPM, FKM Zinc alloy
Enclosure material	Zinc alloy
[In] rated current	3 A, B300, AC-15 (Ue = 120 V) conforming to EN/IEC 60947-5-1 1.5 A, B300, AC-15 (Ue = 240 V) conforming to EN/IEC 60947-5-1 0.1 A, R300, DC-13 (Ue = 250 V) conforming to EN/IEC 60947-5-1

Complementary

Natural differential at low setting	0.35 bar (+/- 0.03 bar)
Natural differential at high setting	0.35 bar (+/- 0.03 bar)
Maximum permissible pressure - per cycle	5 bar
Operating rate	<= 120 cyc/mn at > 0 °C
Repeat accuracy	< 2 %
[Ui] rated insulation voltage	300 V conforming to UL 508 500 V conforming to EN/IEC 60947-1 300 V conforming to CSA C22.2 No 14
[Uimp] rated impulse withstand voltage	6 kV conforming to EN/IEC 60947-1

The information provided in this documentation contains general descriptions and/or technical characteristics of the performance of the products contained herein.
This documentation is not intended as a substitute for and is not to be used for determining suitability or reliability of these products for specific user applications.
It is the duty of any such user or integrator to perform the appropriate and complete risk analysis, evaluation and testing of the products with respect to the relevant specific application or use thereof.
Neither Schneider Electric Industries SAS nor any of its affiliates or subsidiaries shall be responsible or liable for misuse of the information contained herein.

Auxiliary contacts operation	Snap action
Contacts material	Silver contacts
Resistance across terminals	< 25 mOhm conforming to IEC 255-7 category 3 < 25 mOhm conforming to NF C 93-050 method A
Short circuit protection	10 A cartridge fuse type gG (gl)
Mechanical durability	8000000 cycles
Setting	External
Height	113 mm
Depth	75 mm
Width	35 mm
Product weight	0.715 kg

Environment

Standards	CE EN/IEC 60947-5-1 UL 508 CSA C22.2 No 14
Product certifications	BV CCC CSA LROS (Lloyds register of shipping) UL EAC
Protective treatment	TC (standard version)
Ambient air temperature for operation	-25...70 °C
Ambient air temperature for storage	-40...70 °C
Operating position	Any position
Vibration resistance	4 gn (f = 30...500 Hz) conforming to IEC 60068-2-6
Shock resistance	50 gn conforming to IEC 60068-2-27
Class of protection against electric shock	Class I conforming to IEC 1140 Class I conforming to IEC 536 Class I conforming to NF C 20-030
IP degree of protection	IP65 conforming to EN/IEC 60529

Offer Sustainability

Sustainable offer status	Green Premium product
RoHS (date code: YYWW)	Compliant - since 0928 - Schneider Electric declaration of conformity
REACh	Reference not containing SVHC above the threshold
Product end of life instructions	Need no specific recycling operations

Dimensions

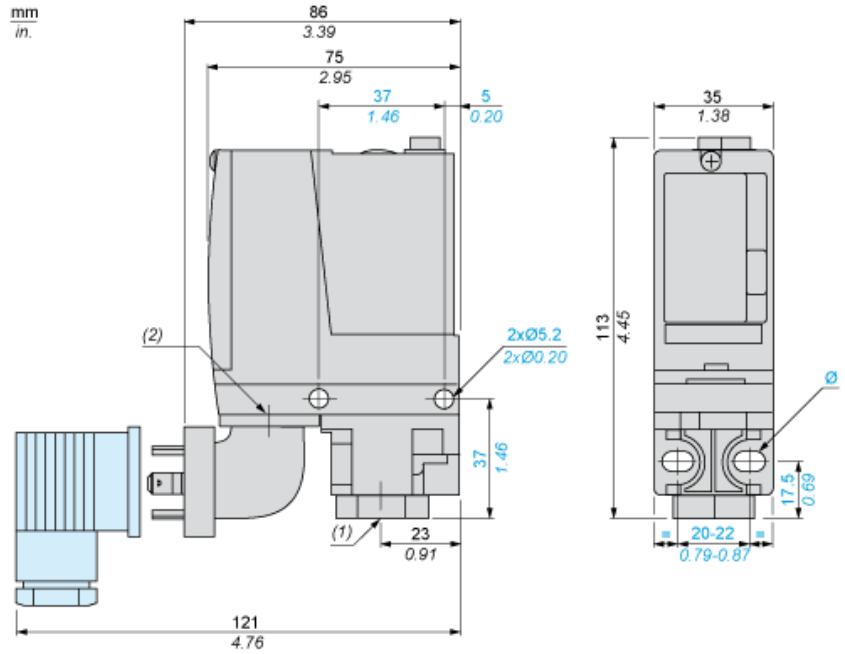

(1) 1 fluid entry, tapped G1/4 (BSP female)
(2) EN 175301-803-A connector
Ø : 2 elongated holes Ø 5.2 x 6.7

Wiring Diagram

Terminal Model

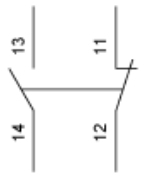

Wiring Diagram

Vacuum Switch Connector Pin View

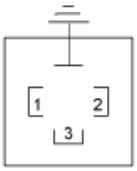

(1) 11 and 13
(2) 12
(3) 14

Operating Curves

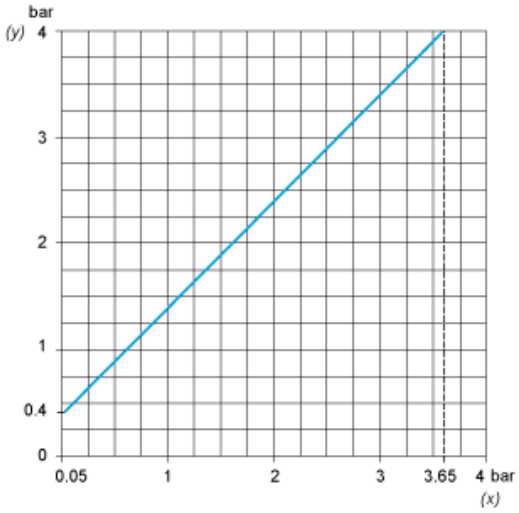

(y) Rising pressure
(x) Falling pressure

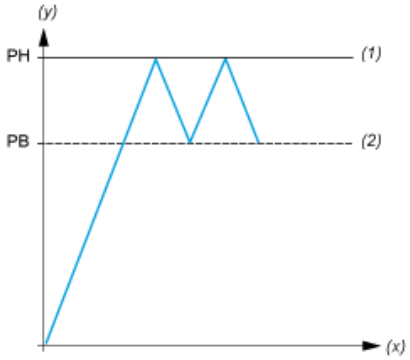

(y) Pressure
(x) Time
(1) Adjustable value
(2) Non adjustable value
PH : High point
PB : Below point