Cord retaining strain relief





4700.00XX

0888.0019 / 0888.0020 / 0888.0021

Description

- Front Panel:
  Screw-on from front side
- 1 Function:
  Protection against accidental disconnection of the plug

Weblinks

pdf-datasheet, html-datasheet, General Product Information, Approvals, CE declaration of conformity, RoHS, CHINA-RoHS, REACH, Mating Connectors, e-Shop, SCHURTER-Stock-Check, Distributor-Stock-Check, CAD-Drawings, Accessories, Detailed request for product

For protection against loosening or accidental disconnection of the plug connector. Can also be mounted later. The correct kit type respectively the corresponding Order No. for each combination of fixed and free components is shown in the selection chart.
Horizontal flanged components are secured to the panel using the kit supplied. Vertical flanged or snap-in components require additional drilling for the cord retaining kit as shown in the diagrams below.
The kits with the part number 4700.00XX consist of:
1 Stainless steel retaining clip
2 Nickel plated brass pillars
2 Nickel plated brass nuts
2 Nickel plated beryllium copper crinkle washers

Dimensions

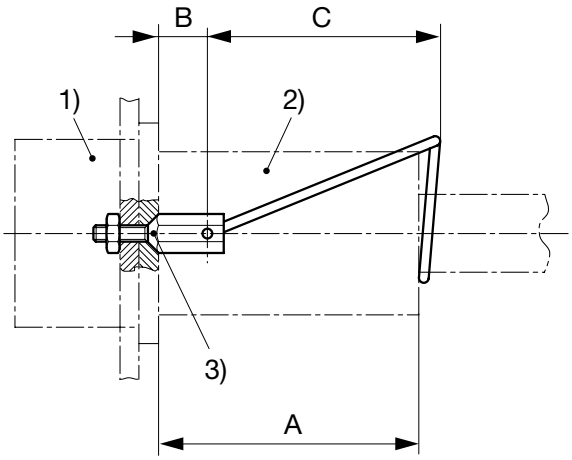

(Details see overview table and table of variants)

1) Inlet/Outlet 2) Plug/Connector 3) Design

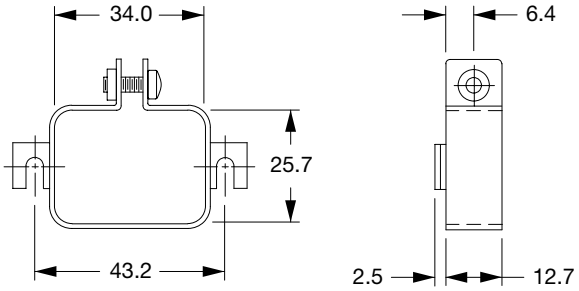

0888.0019

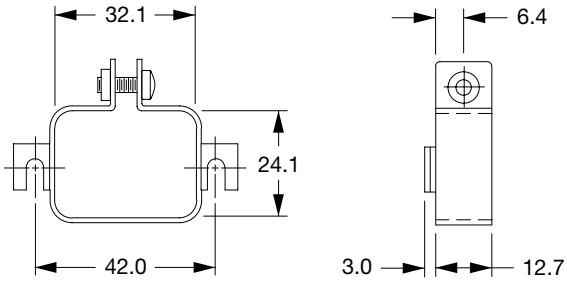

0888.0020

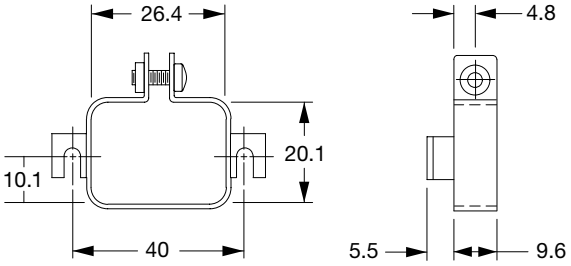

0888.0021

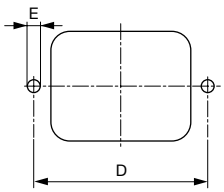

(Details see overview table and table of variants)
Holes according inlet/outlet dimensions centered to respectively inlet/outlet

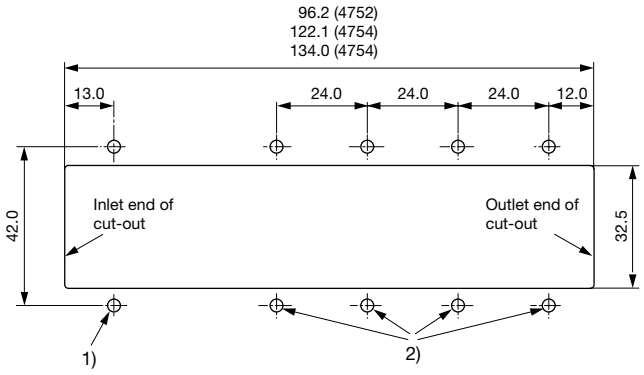

(Details see overview table)
1) Additional drilling for Kit H, when used with 4754 and 4758
2) Additional drilling for Kit E, when used with 4752, 4754 and 4758

Cord retaining kits

	Appliance inlet/outlet							Cord plug/connector					
Type	**Snap-in Mounting**	**Screw-on Mounting**	**Mounting from Frontside**	**Mounting from Rearside**	**Outlet**	**Inlet**	**Panel Thickness**	**Type**	4781	4782	4795	4732	4735	4796
								Dimension A	61.6	61.5	57.0	55.5	60.0	58.0
								Plub				•	•	•
								Connector	•	•	•			
1621		•	•			•					K			
4707		•	•		•				B	B				
4721		•	•		•							D		
4721		•	•		•								F	
4723	•		•		•							E		
4723	•		•		•								G	
4752	•		•		•							E		
4752	•		•		•								G	
4754	•		•		•							E		
4754	•		•			•							G	
4754	•		•		•				H	H				
4758	•		•		•							E		
4758	•		•			•							G	
4758	•		•			•			H	H				
4793		•	•		•						L			
4797	•		•		•									L
4797		•	•			•								J
4798		•	•			•					K			
5110	•		•			•			A	A				
5110		•	•			•			C	C				
5120	•		•			•			G	G				
5120		•	•			•			G	G				
5120		•		•		•	> 5 mm		E	E				
5120		•		•		•	< 3 mm		G	G				
5150	•		•			•			G	G				
5150		•	•			•			G	G				
5150		•		•		•	> 5 mm		E	E				
5150		•		•		•	< 3 mm		G	G				
5130	•		•			•					L			
5130		•	•			•					L			
5130		•		•		•	< 3 mm				L			
5200		•	•			•			B	B				
5216		•	•		•									L
5220		•	•			•			B	B				
6100	•		•			•			A	A				
6100		•	•			•			C	C				
6110	•		•			•			A	A				
6110		•	•			•			C	C				
6135	•		•			•			A	A				
6200	•		•			•			A	A				
6200		•	•			•			B	B				
6220	•		•			•			A	A				
6220		•	•		•				B	B				
6600	•		•		•							E		
6600	•		•		•								G	
6600		•	•		•							D		
6600		•	•		•								F	
6610	•		•		•							E		
6610	•		•		•								G	
0723		•	•			•								J
C20F	•		•			•					L			
C20F		•	•			•					L			
C20F		•		•		•	< 3 mm				L			
CD	•	•	•			•			A	A				
CE	•	•	•			•			A	A				
CG	•	•	•			•			A	A				
DA22		•		•		•			H	H				
DC11	•		•			•			A	A				
DC11		•	•			•			B	B				
DC12	•		•			•			A	A				
DC12		•	•			•			B	B				
DC12		•		•		•			A	A				
DC21		•	•			•			G	G				
DC22		•		•		•			H	H				
DD11		•	•			•			A	A				
DD11		•		•			< 3 mm		A	A				
DD12		•	•			•			A	A				
DD12		•		•			< 3 mm		A	A				
DD21		•		•		•	< 3 mm		A	A				
DD22		•		•		•	< 3 mm		A	A				

Cord retaining kits

	Appliance inlet/outlet							Cord plug/connector					
Type	Snap-in Mounting	Screw-on Mounting	Mounting from Frontside	Mounting from Rearside	Outlet	Inlet	Panel Thickness	Type	4781	4782	4795	4732	4735	4796
								Dimension A	61.6	61.5	57.0	55.5	60.0	58.0
								Plub				•	•	•
								Connector	•	•	•			
EC11		•	•			•					M			
EC12		•		•		•					M			
EF11		•		•		•					M			
EF12		•		•		•					M			
Felcom 54	•		•		•				A	A				
Felcom 54	•		•		•							E		
Felcom 54	•		•			•							G	
Felcom 64	•		•		•				A	A				
Felcom 64	•		•		•							E		
Felcom 64	•		•			•							G	
KD	•	•	•			•			A	A				
KE	•	•	•			•			A	A				
KEA	•		•			•			A	A				
KEA		•	•			•			B	B				
KEB1	•		•			•			A	A				
KEB1		•	•			•			B	B				
KEB2	•	•	•			•			A	A				
KEC	•	•	•			•			A	A				
KFA	•		•			•			A	A				
KFA		•	•			•			B	B				
KFA		•		•		•			A	A				
KFB1		•	•			•			B	B				
KFB2	•	•	•			•			A	A				
KFC	•	•	•			•			A	A				
KFS		•	•			•			C	C				
KFX		•	•			•			C	C				
KG		•	•			•			A	A				
KM	•		•			•			A	A				

All Variants

Kit	Type	B	C	D	E	Order Number	
-	-	mm	mm	mm	mm	0888.0001	▮
-	-	mm	mm	mm	mm	0888.0004	
-	-	mm	mm	mm	mm	0888.0005	▮
-	-	mm	mm	mm	mm	0888.0015	▮
-	-	mm	mm	mm	mm	0888.0016	
-	-	mm	mm	mm	mm	0888.0017	▮
-	-	mm	mm	mm	mm	4700.0013	
-	-	mm	mm	mm	mm	4700.0014	
-	-	mm	mm	mm	mm	4700.0015	
-	-	mm	mm	mm	mm	4700.0016	
A	Flat head	8 mm		36 mm	3.4 mm	4700.0001	▮
B	Countersunk	9.5 mm		36 mm	3.4 mm	4700.0002	▮
C	Countersunk	8 mm		40 mm	3.4 mm	4700.0003	▮
D	Countersunk	4 mm	40 mm	40 mm	3.4 mm	4700.0004	▮
E	Flat head	4.5 mm	40 mm	40 mm	3.4 mm	4700.0005	▮
F	Countersunk	4 mm		40 mm	3.4 mm	4700.0006	▮
G	Flat head	4.5 mm		40 mm	3.4 mm	4700.0007	▮
H	Flat head	5.5 mm		40 mm	3.4 mm	4700.0008	▮
J	Countersunk	8 mm		45 mm	3.4 mm	4700.0009	▮
K	Countersunk	6.6 mm		42 mm	3.4 mm	4700.0010	▮
L	Flat head	5.5 mm			3.4 mm	4700.0011	▮
M	Flat head	5.5 mm	40 mm		3.4 mm	4700.0012	
X	Flat head	-	-		-	0888.0019	
Y	Flat head	-	-	42 mm	-	0888.0020	
Z	Flat head	-	-	40 mm	-	0888.0021	

▮ Most Popular.

Kit	Type	B	C	D	E	Order Number

Availability for all products can be searched real-time:http://www.schurter.com/en/Stock-Check/Stock-Check-SCHURTER

Packaging unit 50 Pcs

16.04.2015

The specifications, descriptions and illustrations indicated in this document are based on current information. All content is subject to modifications and amendments. Information furnished is believed to be accurate and reliable. However, users should independently evaluate the suitability and test each product selected for their own applications.