## 22DCP Athlonix™

Ø 22 mm • Precious metal commutation • 6.5 mNm

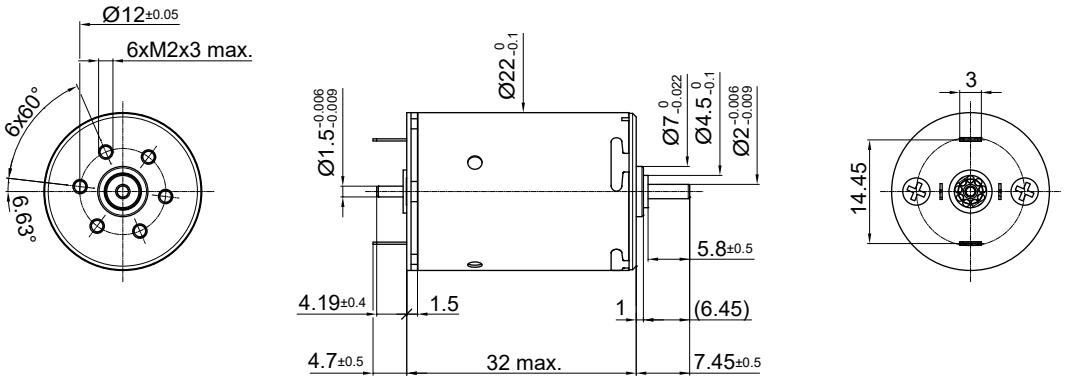


Dimensions in mm.

| Electrical Data | Symbol | 22DCP 32P2 •••• .2 | | | | | | Unit |
|---|---|---|---|---|---|---|---|---|
| | | 221P | 216P | 213P | 211P | 210P | 209P | |
| 1 Nominal Voltage | V | 3 | 6 | 9 | 12 | 15 | 18 | Volt |
| 2 No-Load Speed | $n_0$ | 8321 | 9739 | 10022 | 9741 | 9741 | 9348 | rpm |
| 3 No-Load Current | $I_0$ | 58.9 | 34.4 | 23.6 | 17.2 | 13.8 | 11.0 | mA |
| 4 Terminal Resistance | R | 0.7 | 2.0 | 4.1 | 7.8 | 12.1 | 18.6 | Ω |
| 5 Output Power | $P_{2max.}$ | 2.9 | 4.1 | 4.4 | 4.2 | 4.2 | 4.0 | W |
| 6 Stall Torque | mNm | 13.65 (1.94) | 17.47 (2.48) | 18.34 (2.6) | 17.81 (2.53) | 17.83 (2.53) | 17.37 (2.46) | mNm (oz-in) |
| 7 Efficiency | $h_{max.}$ | 77 | 80 | 80 | 80 | 80 | 80 | % |
| 8 Max Continuous Speed | $n_{e\ max.}$ | 10000 | 10000 | 10000 | 10000 | 10000 | 10000 | rpm |
| 9 Max Continuous Torque | $M_{e\ max.}$ | 6.09 (0.87) | 6.38 (0.91) | 6.45 (0.92) | 6.44 (0.92) | 6.45 (0.92) | 6.5 (0.93) | mNm (oz-in) |
| 10 Max Continuous Current | $I_{e\ max.}$ | 1.85 | 1.13 | 0.78 | 0.57 | 0.46 | 0.37 | A |
| 11 Back-EMF Constant | $k_E$ | 0.36 | 0.61 | 0.89 | 1.22 | 1.52 | 1.90 | mV/rpm |
| 12 Torque Constant | $k_M$ | 3.39 | 5.82 | 8.48 | 11.63 | 14.54 | 18.18 | mNm/A |
| 13 Motor Regulation | $R/k^2$ | 63.83 | 58.37 | 57.22 | 57.28 | 57.22 | 56.34 | $10^3$/Nms |
| 14 Friction Torque | $T_F$ | 0.2 (0.03) | 0.2 (0.03) | 0.2 (0.03) | 0.2 (0.03) | 0.2 (0.03) | 0.2 (0.03) | mNm (oz-in) |
| 15 Mechanical Time Constant | $\tau_m$ | 30.63 | 27.87 | 27.12 | 26.81 | 26.68 | 26.60 | ms |
| 16 Rotor Inertia | J | 4.80 | 4.78 | 4.74 | 4.68 | 4.66 | 4.72 | g-cm² |

| General Data | | | |
|---|---|---|---|
| 17 Thermal Resistance (rotor/body) | $R_{th1}/R_{th2}$ | 6/22 | °C/W |
| 18 Thermal Time Constant (rotor/stator) | $t_{W1}/t_{W2}$ | 9/550 | S |
| 19 Operating Temperature Range: | motor<br>rotor | -30°C to 85°C (-22°F to 185°F)<br>100°C (212°F) | °C (°F)<br>°C (°F) |
| 20 Shaft Load Max.:<br>(5 mm. from bearing) | <br>-radial<br>-axial | With sleeve bearings<br>1.5 (5.39)<br>100 (359.6) | <br>N (oz)<br>N (oz) |
| 21 Shaft Play: | -radial<br>-axial | 0.03 (0.0012)<br>0.15 (0.0059) | mm (inch)<br>mm (inch) |
| 22 Weight | g | 58 (2.05) | g (oz) |
| 23 Commutation Segment | - | 9 | segment |

*Also available with ball bearing

### Execution Table

| Gearbox | Single Shaft | MR2 | E9 |
|---|---|---|---|
| R22 | 4 | 5 | 6 |
| K24 | 7 | 8 | 9 |
| K27 | 1 | 2 | 3 |
| R22HT | 11 | Upon Request | Upon Request |

Note:
P1: standard commutation
P2: special commutation for double shaft version

▶ Motor shaft rotates CW when seen from motor front face when +ve and -ve supply is given to respective terminals.

### No Load Speed vs. Torque

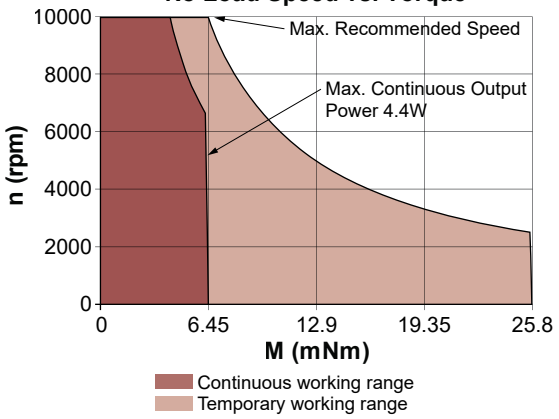

## 22DCP Athlonix™

Ø 22 mm • Precious metal commutation • 6.5 mNm

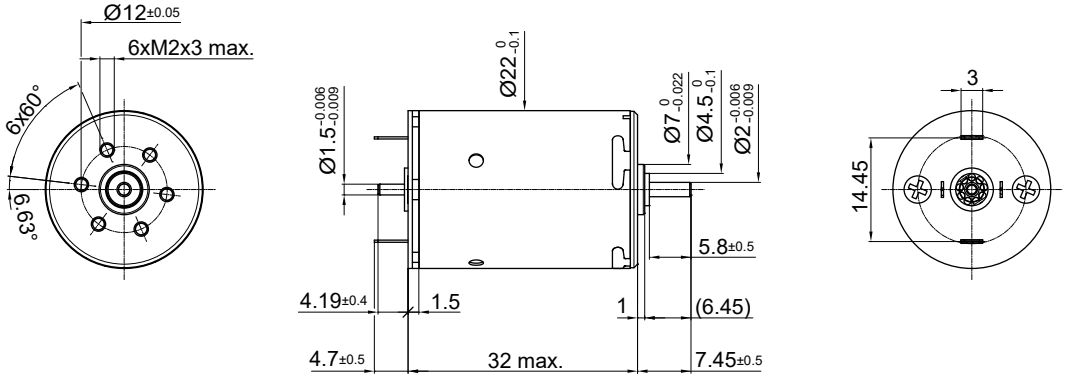


Dimensions in mm.

| Electrical Data | Symbol | 22DCP 32P2 •••• .2 | | | | | Unit |
|---|---|---|---|---|---|---|---|
| | | 212E | 211E | 210E | 209E | 208E | |
| 1 Nominal Voltage | V | 21 | 24 | 30 | 36 | 48 | Volt |
| 2 No-Load Speed | $n_0$ | 10,357 | 10,465 | 10,806 | 10,281 | 11,049 | rpm |
| 3 No-Load Current | $I_0$ | 10.5 | 9.2 | 7.6 | 6.1 | 4.9 | mA |
| 4 Terminal Resistance | R | 23.4 | 30.4 | 46.1 | 71.7 | 112.6 | Ω |
| 5 Output Power | $P_{2max.}$ | 4.2 | 4.3 | 4.4 | 4.1 | 4.5 | W |
| 6 Stall Torque | mNm | 16.95 (2.41) | 16.89 (2.4) | 16.85 (2.39) | 16.39 (2.33) | 17.28 (2.45) | mNm (oz-in) |
| 7 Efficiency | $h_{max.}$ | 80 | 80 | 80 | 79 | 80 | % |
| 8 Max Continuous Speed | $n_{e\ max.}$ | 10,000 | 10,000 | 10,000 | 10,000 | 10,000 | rpm |
| 9 Max Continuous Torque | $M_{e\ max.}$ | 6.08 (0.86) | 6.04 (0.86) | 5.93 (0.84) | 6 (0.85) | 5.94 (0.85) | mNm (oz-in) |
| 10 Max Continuous Current | $I_{e\ max.}$ | 0.33 | 0.29 | 0.23 | 0.19 | 0.15 | A |
| 11 Back-EMF Constant | $k_E$ | 2.00 | 2.27 | 2.74 | 3.46 | 4.29 | mV/rpm |
| 12 Torque Constant | $k_M$ | 19.14 | 21.64 | 26.20 | 33.03 | 41.01 | mNm/A |
| 13 Motor Regulation | $R/k^2$ | 64.0 | 64.9 | 67.2 | 65.70 | 66.95 | $10^3$/Nms |
| 14 Friction Torque | $T_F$ | 0.2 (0.03) | 0.2 (0.03) | 0.2 (0.03) | 0.2 (0.03) | 0.2 (0.03) | mNm (oz-in) |
| 15 Mechanical Time Constant | $\tau_m$ | 30.1 | 30.0 | 30.0 | 30.0 | 30.0 | ms |
| 16 Rotor Inertia | J | 4.70 | 4.63 | 4.47 | 4.56 | 4.48 | g-cm² |

| General Data | | | |
|---|---|---|---|
| 17 Thermal Resistance (rotor/body) | $R_{th1}/R_{th2}$ | 6/22 | °C/W |
| 18 Thermal Time Constant (rotor/stator) | $t_{W1}/t_{W2}$ | 9/550 | S |
| 19 Operating Temperature Range: | motor | -30°C to 85°C (-22°F to 185°F) | °C (°F) |
| | rotor | 100°C (212°F) | °C (°F) |
| 20 Shaft Load Max.: | | With sleeve bearings | |
| (5 mm. from bearing) | -radial | 1.5 (5.39) | N (oz) |
| | -axial | 100 (359.6) | N (oz) |
| 21 Shaft Play: | -radial | 0.03 (0.0012) | mm (inch) |
| | -axial | 0.15 (0.0059) | mm (inch) |
| 22 Weight | g | 58 (2.05) | g (oz) |
| 23 Commutation Segment | - | 9 | segment |

*Also available with ball bearing

### Execution Table

| Gearbox | Single Shaft | MR2 | E9 |
|---|---|---|---|
| R22 | 4 | 5 | 6 |
| K24 | 7 | 8 | 9 |
| K27 | 1 | 2 | 3 |
| R22HT | 11 | Upon Request | Upon Request |

Note:
P1: standard commutation
P2: special commutation for double shaft version

▶ Motor shaft rotates CW when seen from motor front face when +ve and -ve supply is given to respective terminals.

### No Load Speed vs. Torque

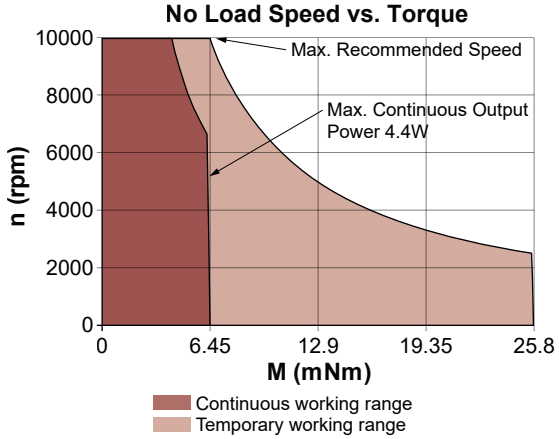




V012021 • © 2021 Portescap. Specifications subject to change without notice.