8ECF01X5.1221C-0

1 General information

- Can be used in cable drag chains
- Assembled specifically for use with ACOPOS P3 servo drives and B&R servo motors with series 615 built-in connectors
- itec - Innovative connector system for fast and secure connections

2 Order data

Model number	Short description	Figure
	EnDat 2.2 cables	
8ECF01X5.1221C-0	ACOPOS P3 EnDat 2.2 cable, length 1.5 m, 1x 4x 0.14 mm² + 4x 0.35 mm², 12-pin female series 615 signal connector, 8-pin Mini I/O male connector, can be used in cable drag chains	

Table 1: 8ECF01X5.1221C-0 - Order data

3 Technical data

Model number	8ECF01X5.1221C-0
General information	
Cable cross section	4x 0.14 mm² + 4x 0.35 mm²
Durability	Oil resistance per DIN EN 50363-10-2 (VDE 0207-363-10-2) as well as standard cleaning agents and hydraulic oil [1)]
Certification	UL AWM Style 20963, 80°C, 30 V, E63216 [1)]
Certifications	
CE	Yes
Cable construction	
Supply lines	
Quantity	4
Wire insulation	Special thermoplastic material
Wire colors	White/Green, brown/green, blue, white
Variant	Tinned copper stranded wire
Cross section	0.35 mm²
Shield	No
Stranding	No
Signal line	
Quantity	4
Wire insulation	Polyolefin foam
Wire colors	Yellow, gray, pink, violet
Variant	Tinned copper stranded wire
Cross section	0.14 mm²
Shield	No
Stranding	All 4 wires together
Cable stranding	With terminating foil shield
Cable shield	Copper/Tin braiding, optical coverage ≥85%
Outer jacket	
Material	PUR
Color	Green flat
Labeling	B&R 4x0,14 + 4x0,35 FLEX (UL) AWM STYLE 20963 80°C 30 V E63216 [1)]
Connector	
Type	12-pin female series 615 signal connector
Mating cycles	<500
Contacts	12
Additional connectors	8-pin male Mini I/O encoder connector Mating cycles: <1500 Contacts: 8 Degree of protection per EN 60529: IP30 when connected
Degree of protection per EN 60529	IP66/67 when connected
Electrical properties [1)]	
Operating voltage	≤30 V

Table 2: 8ECF01X5.1221C-0 - Technical data

Model number	8ECF01X5.1221C-0
Test voltage	
Wire - Wire	1 kV
Wire - Shield	0.5 kV
Conductor resistance	
Supply lines	≤55 Ω/km
Signal line	≤134 Ω/km
Insulation resistance	>200 MΩ*km
Ambient conditions [1]	
Temperature	
Moving	-10°C to 80°C
Static	-40°C to 80°C
Mechanical properties [1]	
Dimensions	
Length	1.5 m
Diameter	6 mm ±0.2 mm
Bend radius	
Single bend	≥19 mm
Moving	≥47 mm
Drag chain data	
Acceleration	≤6 g
Flex cycles [2]	≥3000000
Velocity	≤4 m/s
Weight	0.09 kg

Table 2: 8ECF01X5.1221C-0 - Technical data

1) Values refer to the raw cable being used.
2) Valid at an ambient temperature of 20°C and bend radius of 78 mm.

4 Wiring

4.1 Design

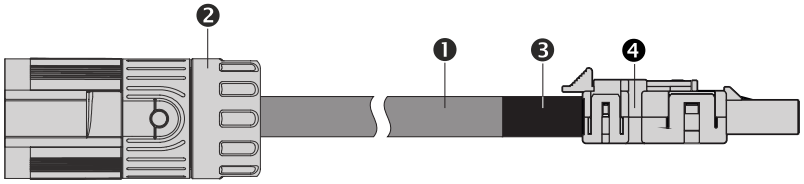

Pos.	Description	Note
1	Encoder line	4x 0.14 mm² + 4x 0.35 mm²
2	12-pin female circular connector Coding contact	Dimensions: ø 28 x 80 mm
3	Heat shrink tubing	
4	Mini I/O encoder connector	Dimensions: 11 x 8 x 33 mm

Table 3: 8ECF EnDat 2.2 cables - Construction

4.2 Pinout

Circular connector	Pin	Description	Function	Pin	Mini I/O connector
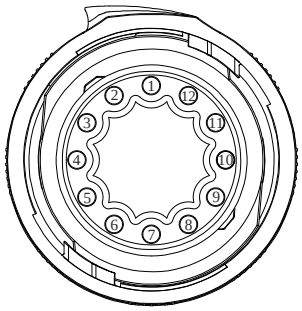	1	+12 V out	Encoder power supply +12 V	1	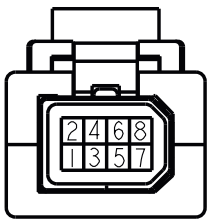
	2	D	Data input	6	
	3	D\	Data inverted	8	
	4	T	Clock output	2	
	5	T\	Clock output inverted	4	
	6	---			
	7	COM	Encoder power supply 0 V	7	
	8	---	Coding contact		
	9	---			
	10	---			
	11	---			
	12	---			

Table 4: 8ECF EnDat 2.2 cables - Pinout

4.3 Cable diagram

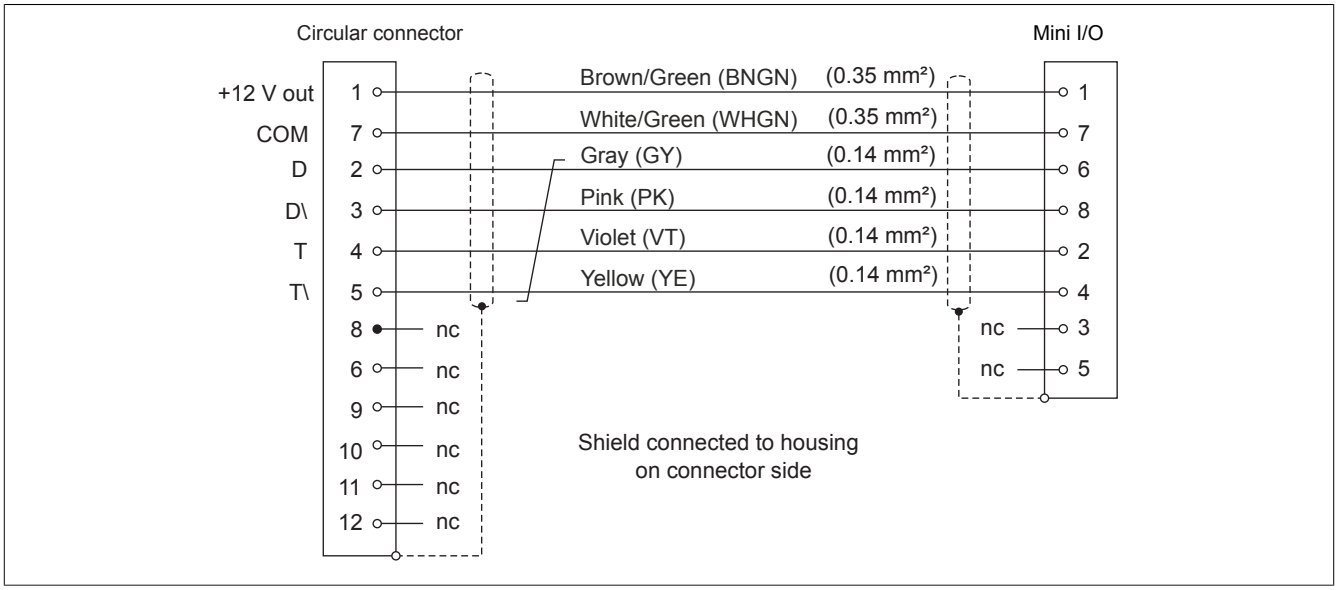

Figure 1: 8ECF EnDat 2.2 cables - Cable diagram