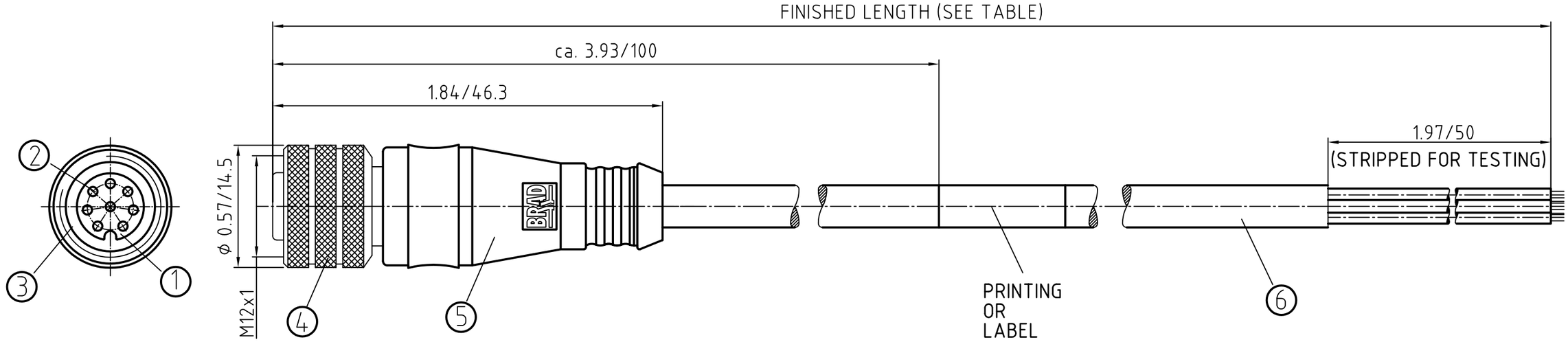

FEMALE FACE VIEW	
8-POLE	1 WHITE 2 BROWN 3 GREEN 4 YELLOW 5 GREY 6 PINK 7 BLUE 8 RED
WIRING DIAGRAM	

POL	MATERIAL NUMBER	ENGINEERING NUMBER	FINISHED LENGTH
8	1200650951	808000P02M020	6.56' +3.50" -0 [2.0M +88.9 -0]

ITEM	COMPONENT	MATERIAL	FINISH
1	INSERT	POLYURETHANE (PUR)	BLACK
2	CONTACT MATERIAL CONTACT PLATING	BRASS GOLD	CuZn Ni/Au
3	O-RING	VITON	RED
4	COUPLING NUT	BRASS	NICKEL PLATED
5	OVERMOLD	POLYURETHANE (PUR)	BLACK
6	CABLE- 0.25²/24 AWG (COPPER STRANDING) 8 CONDUCT. 300V	JACKET:PUR/PVC INSUL.:POLYPROP	JACKET:BLACK

CONNECTOR SPECIFICATION:

VOLTAGE RATING	30 VAC/36 VDC
AMPERAGE RATING	2 AMPS
PROTECTION CLASS	IP68
OPERATING TEMPERATURE	-30°C TO 80°C
UL CERTIFICATIONS	NOT APPLICABLE
CSA CERTIFICATIONS	NOT APPLICABLE

DESCRIPTION
EC NO: WEU2010-0277
DRWN: LSTEMMLE 2010/01/13
CH'KD: NS ----
APPR: NSTAUDIG 2010/01/26
DESCRIPTION
1
REV

QUALITY SYMBOLS
▼ = 0
Ⓒ = 0

GENERAL TOLERANCES (UNLESS SPECIFIED)

	mm	INCH
4 PLACES	±---	±---
3 PLACES	±---	±---
2 PLACES	±---	±.01
1 PLACE	±0.3	±---
ANGULAR ±	--- °	

DRAFT WHERE APPLICABLE MUST REMAIN WITHIN DIMENSIONS

DIMENSION STYLE: IN/MM
SCALE: 2:1
DESIGN UNITS: METRIC
THIRD ANGLE PROJECTION

DRAWN BY: ---- DATE: ----
CHECKED BY: RE DATE: 2010/01/21
APPROVED BY: NSTAUDIG DATE: 2010/01/25

MICRO-CHANGE CORDSET
8-POL FEMALE STR SE
24/8 BLACK PUR/PVC CABLE

MOLEX INCORPORATED

MATERIAL NO.: SEE TABLE
DOCUMENT NO.: SD-120065-030
SHEET NO.: 1 OF 1
SIZE: A3

THIS DRAWING CONTAINS INFORMATION THAT IS PROPRIETARY TO MOLEX INCORPORATED AND SHOULD NOT BE USED WITHOUT WRITTEN PERMISSION