MOTOR STARTING SOLUTIONS



Lovato electric

ENERGY AND AUTOMATION

MOTOR STARTING SOLUTIONS

IE3 READY

LOVATO Electric products are suitable for new motors with high IE3 efficiency values.



Motor power

400V

	kW	0.37	0.75
	HP	0.5	1
	A (AC3)	1. 1	1.9
MOTOR PROTECTION CIRCUIT BREAKER WITH CONTACTOR	**Motor protection circuit breaker ■**	SM1P 0160	SM1P 0250
	Thermal trip adjustment range ▲ [A]	1...1.6	1.6...2.5
	Icu 400V [kA]	100	100
	Rigid circuit breaker - contactor connection	SM1X30 40P	SM1X30 40P
	AC contactor	11 BG06❶A❷	11 BG06❶A❷
CONTACTOR WITH THERMAL RELAY	**Fuse holder**	FB01 F 3P	FB01 F 3P
	Backup fuse aM [A]	2 (10X38)	4 (10X38)
	AC contactor ●	11 BG06❶A❷	11 BG06❶A❷
	Thermal overload relay	11 RF9 1V5	11 RF9 2V3
	Thermal trip adjustment range ▲ [A]	0.9...1.5	1.4...2.3
	Set of links for direct thermal overload relay mounting on contactor	––	––
ASSEMBLED STAR-DELTA STARTER OPEN FRAME	**Fuse holder**	––	––
	Backup fuse aM [A]	––	––
	Star-delta starter	––	––
	Thermal overload relay	––	––
	Thermal trip adjustment range ▲ [A]	––	––
STAR-DELTA STARTER COMPONENTS (TO BE CUSTOMER ASSEMBLED)	**Fuse holder**	––	––
	Backup fuse aM [A]	––	––
	AC line contactor ●	––	––
	AC delta contactor ●	––	––
	AC star contactor ●	––	––
	Thermal overload relay ◆★	––	––
	Thermal trip adjustment range ▲ [A]	––	––
	Set of links for direct thermal overload relay mounting on contactor	––	––
	Time relay	––	––
	Add-on auxiliary contact blocks (line contactor)	––	––
	Add-on auxiliary contact blocks (delta contactor)	––	––
	Add-on auxiliary contact blocks (star contactor)	––	––
	Rigid connections	––	––
SOFT STARTER	**Fuse holder**	––	––
	High speed fuse [A]	––	––
	AC line contactor ●	––	––
	Soft starter	––	––
VARIABLE SPEED DRIVE	**Fuse holder**	FB01 F 3P	FB01 F 3P
	Backup fuse aM [A]	2 (10X38)	2 (10X38)
	Variable speed drive	VLB3 0004 A480	VLB3 0007 A480







❶ Replace with 10 to obtain contactor with 1 normally open auxiliary contact NO or 01 to obtain contactor with 1 normally closed auxiliary contact NC.
E.g.: 11 BG06 10 A❷, contactor with 1 NO auxiliary contact.






1.5	**2.2**	**3**	**4**	**5.5**	**7.5**	**11**	**15**
2	**3**	**4**	**5.5**	**7.5**	**10**	**15**	**20**
3.6	**4.9**	**6.5**	**8.5**	**11.5**	**15.5**	**22**	**29**
SM1P 0400	SM1P 0650	SM1P 1000	SM1P 1000	SM1P 1400	SM1P 1800	SM1P 2300	SM1P 3200
2.5...4	4...6.5	6.3...10	6.3...10	9...14	13...18	17...23	24...32
100	100	100	100	25	25	15	10
SM1X30 40P	SM1X30 40P	SM1X31 41P	SM1X31 41P	SM1X31 41P	SM1X31 41P	SM1X31 41P	SM1X32 41P
11 BG06❶A❷	11 BG06❶A❷	BF09❶A❷	BF09❶A❷	BF12❶A❷	BF18❶A❷	BF25❶A❷	BF32 00A❷
FB01 F 3P	FB01 F 3P	FB01 F 3P	FB01 F 3P	FB01 F 3P	FB01 F 3P	FB01 F 3P	FB02 A 3P
6 (10X38)	8 (10X38)	8 (10X38)	10 (10X38)	16 (10X38)	20 (10X38)	25 (10X38)	32 (14X51)
11 BG06❶A❷	11 BG06❶A❷	BF09❶A❷	BF09❶A❷	BF12❶A❷	BF18❶A❷	BF25❶A❷	BF32 00A❷
11 RF9 5	11 RF9 75	RF38 1000	RF38 1000	RF38 1400	RF38 1800	RF38 2300	RF38 3200
3...5	4.5...7.5	6.3...10	6.3...10	9...14	13...18	17...23	24...32
––	––	––	––	––	––	––	––
––	––	FB01 F 3P	FB01 F 3P	FB01 F 3P	FB01 F 3P	FB01 F 3P	FB02 A 3P
––	––	8 (10X38)	10 (10X38)	16 (10X38)	20 (10X38)	25 (10X38)	32 (14X51)
––	––	BFA009 70❷	BFA009 70❷	BFA009 70❷	BFA009 70❷	BFA012 70❷	BFA018 70❷
––	––	RF38 0400	RF38 0650	RF38 1000	RF38 1000	RF38 1400	RF38 1800
––	––	2.5...4	4...6.5	6.3...10	6.3...10	9...14	13...18
––	––	FB01 F 3P	FB01 F 3P	FB01 F 3P	FB01 F 3P	FB01 F 3P	FB02 A 3P
––	––	8 (10X38)	10 (10X38)	16 (10X38)	20 (10X38)	25 (10X38)	32 (14X51)
––	––	BF09 10A❷	BF09 10A❷	BF09 10A❷	BF09 10A❷	BF12 10A❷	BF18 10A❷
––	––	BF09 01A❷	BF09 01A❷	BF09 01A❷	BF09 01A❷	BF12 01A❷	BF18 01A❷
––	––	BF09 10A❷	BF09 10A❷	BF09 10A❷	BF09 10A❷	BF09 10A❷	BF12 10A❷
––	––	RF38 0400	RF38 0650	RF38 1000	RF38 1000	RF38 1400	RF38 1800
––	––	2.5...4	4...6.5	6.3...10	6.3...10	9...14	13...18
––	––	––	––	––	––	––	––
––	––	TM ST❹	TM ST❹	TM ST❹	TM ST❹	TM ST❹	TM ST❹
––	––	BFX10 20	BFX10 20	BFX10 20	BFX10 20	BFX10 20	BFX10 20
––	––	––	––	––	––	––	––
––	––	BFX10 11	BFX10 11	BFX10 11	BFX10 11	BFX10 11	BFX10 11
––	––	BFX31 31	BFX31 31	BFX31 31	BFX31 31	BFX31 31	BFX31 31
––	––	FB02 A 3P	FB02 A 3P	FB02 A 3P	FB03 A 3P	FB03 A 3P	FB03 A 3P
––	––	35 (14X51)	35 (14X51)	35 (14X51)	90 (22X58)	90 (22X58)	90
––	––	BF09❶A❷	BF09❶A❷	BF12❶A❷	BF18❶A❷	BF18❶A❷	BF32 00A❷
––	––	ADXC 012 400	ADXC 012 400	ADXC 012 400	ADXL 0030 600	ADXL 0030 600	ADXL 0030 600
FB01 F 3P	FB01 F 3P	FB01 F 3P	FB01 F 3P	FB01 F 3P	FB01 F 3P	FB01 F 3P	FB02 A 3P
4 (10X38)	6 (10X38)	8 (10X38)	10 (10X38)	16 (10X38)	20 (10X38)	25 (10X38)	32 (14X51)
VLB3 0015 A480	VLB3 0022 A480	VLB3 0040 A480	VLB3 0040 A480	VLB3 0055 A480	VLB3 0075 A480	VLB3 0110 A480	VLB3 0150 A480

❷ Complete order code with the coil voltage digit if 50/60Hz or the coil voltage digit followed by 60 if 60Hz.
Standard voltages are as follow:
- 50/60Hz 024 - 048 - 110 - 230 - 400VAC
- 60Hz 024 60 - 048 60 - 120 60 - 220 60 - 230 60 - 460 60 - 575 60VAC
E.g.: 11 BG06 10 A230 or 11 BG06 10 A460 60.

❸ The coil of the contactor can be powered indifferently in AC or DC.
Complete the order code with the digit of the coil voltage.
Standard voltages are as follow: 24 - 48 - 60 - 110 - 125 - 220 - 240 - 380 - 415.
For coils: 110...125V indicate 110, 220...240V indicate 220, 380...415V indicate 380, 440...480V indicate 440.
E.g.: 11 B145 00 220 for contactor with 20...240VAC/DC coil.






18.5	22	30	37	45	55	75	90
25	30	40	50	60	75	100	125
35	41	55	66	80	97	132	160
SM1P 4000	SM2R 5000	SM2R 6300	SM3R 7500	SM3R 9000	SM3R 9900	––	––
30...40	34...50	45...63	55...75	70...90	80...100	––	––
10	50	50	50	50	50	––	––
SM1X32 41P	––	––	––	––	––	––	––
BF38 00A❷	BF50 00A❷	BF65 00A❷	BF80 00A❷	BF80 00A❷	11 BF110 00❷	11 B145 00❸	11 B180 00❸
FB02 A 3P	FB02 A 3P	FB03 A 3P	FB03 A 3P	FB03 A 3P	FB03 A 3P	GE0161 N❺	GE0161 N❺
40 (14X51)	50 (14X51)	63 (22X58)	80 (22X58)	80 (22X58)	100 (22X58)	160 (NH)	160 (NH)
BF38 00A❷	BF50 00A❷	BF65 00A❷	BF80 00A❷	BF80 00A❷	11 BF110 00❷	11 B145 00❸	11 B180 00❸
RF38 3800	RF82 5000	RF82 6500	RF82 8200	RF82 8200	11 RF95 3 110	RF200 150	RF200 200
32...38	35...50	46...65	60...82	60...82	90...110	90...150	120...200
––	––	––	––	––	––	11 G372	11 G372
FB02 A 3P	FB02 A 3P	FB03 A 3P	FB03 A 3P	FB03 A 3P	FB03 A 3P	GE0161 N❺	GE0161 N❺
40 (14X51)	50 (14X51)	63 (22X58)	80 (22X58)	80 (22X58)	100 (22X58)	160 (NH)	160 (NH)
BFA025 70❷	BFA026 70❷	BFA038 70❷	BFA050 70❷	BFA050 70❷	BFA065 70❷	BFA080 70❷	21 NYF 115 100❸
RF38 2300	RF38 3200	RF38 3800	RF82 5000	RF82 5000	RF82 6500	RF82 8200	già incluso
17...23	24...32	32...38	35...50	35...50	46...65	60...82	––
FB02 A 3P	FB02 A 3P	FB03 A 3P	FB03 A 3P	FB03 A 3P	FB03 A 3P	GE0161 N❺	GE0161 N❺
40 (14X51)	50 (14X51)	63 (22X58)	80 (22X58)	100 (22X58)	100 (22X58)	160 (NH)	160 (NH)
BF25 10A❷	BF26 00A❷	BF38 00A❷	BF50 00A❷	BF50 00A❷	BF65 00A❷	BF80 00A❷	11 B115 00❸
BF25 01A❷	BF26 00A❷	BF38 00A❷	BF50 00A❷	BF50 00A❷	BF65 00A❷	BF80 00A❷	11 B115 00❸
BF18 10A❷	BF18 10A❷	BF25 10A❷	BF32 00A❷	BF32 00A❷	BF32 00A❷	BF50 00A❷	BF65 00A❷
RF38 2300	RF38 3200	RF38 3800	RF82 5000	RF82 5000	RF82 6500	RF82 8200	RF200 100
17...23	24...32	32...38	35...50	35...50	46...65	60...82	––
––	––	––	––	––	––	––	11 G372
TM ST❹	TM ST❹	TM ST❹	TM ST❹	TM ST❹	TM ST❹	TM ST❹	TM ST❹
BFX10 20	BFX10 20	BFX10 20	BFX10 20	BFX10 20	BFX10 20	BFX10 20	11 G350
––	BFX10 11	BFX10 11	BFX10 11	BFX10 11	BFX10 11	BFX10 11	11 G354
BFX10 11	BFX10 11	BFX10 11	BFX10 11	BFX10 11	BFX10 11	BFX10 11	BFX10 11
BFX31 31	BFX31 31	BFX32 32	––	––	––	––	––
GE0161 N❺	GE0161 N❺	GE0161 N❺	GE0250 N❻	GE0250 N❻	GE0250 N❻	GE0400 N❻	GE0630 N❼
120 (NH)	120 (NH)	160 (NH)	180 (NH)	200 (NH)	250 (NH)	315 (NH)	500 (NH)
BF38 00A❷	BF50 00A❷	BF65 00A❷	BF80 00A❷	BF80 00A❷	11 BF110 00❷	11 B145 00❸	11 B180 00❸
ADXL 0045 600	ADXL 0045 600	ADXL 0060 600	ADXL 0075 600	ADXL 0085 600	ADXL 0115 600	ADXL 0135 600	ADXL 0162 600
FB02 A 3P	FB02 A 3P	FB03 A 3P	FB03 A 3P	FB03 A 3P	FB03 A 3P	GE0161 N❺	GE0161 N❺
40 (14X51)	50 (14X51)	63 (22X58)	80 (22X58)	80 (22X58)	100 (22X58)	160 (NH)	160 (NH)
VLB3 0185 A480	VLB3 0220 A480	VLB3 0300 A480	VLB3 0370 A480 XX❽	VLB3 0450 A480 XX❽	VLB3 0550 A480 XX❽	VLB3 0750 A480 XX❽	❾

❹ TM ST for auxiliary supply 24...240VAC; TM ST A440 for auxiliary supply 380...440VAC.
❺ Order to complete: GEX66N door coupling handle; GEX7536N shaft extension.
❻ Order to complete: GEX67N door coupling handle; GEX7535N shaft extension.
❼ Order to complete: GEX68N door coupling handle; GEX7535N shaft extension.
❽ The code refers only at power unit.
Complete with code VLBX L06 logic units (Modbus) and display/keyboard code VLBX C01.
❾ Consult Customer Service for information
(tel. +39 035 4282422; e-mail: service@LovatoElectric.com).
▲ Recommended range. For other ranges, see the general catalogue.
◆ RF9, RF82 and RF95 are with manual resetting. RF38, RF200 and RF420 are with manual and automatic resetting.
● For contactor with DC coil see general catalogue.



110	**132**	**160**
150	**180**	**220**
195	**230**	**280**
––	––	––
––	––	––
––	––	––
––	––	––
11 B250 00❸	11 B250 00❸	11 B310 00❸
GE0250 N❻	GE0250 N❻	GE0400 N❻
200 (NH)	250 (NH)	315 (NH)
11 B250 00❸	11 B250 00❸	11 B310 00❸
RF420 250	RF420 300	RF420 300
150...250	180...300	180...300
11 G376	11 G376	11 G376
GE0250 N❻	GE0250 N❻	GE0400 N❻
200 (NH)	250 (NH)	315 (NH)
21 NYF 115 125❸	21 NYF 145 150❸	21 NYF 180 200❸
già incluso	già incluso	già incluso
––	––	––
GE0250 N❻	GE0250 N❻	GE0400 N❻
200 (NH)	250 (NH)	315 (NH)
11 B115 00❸	11 B145 00❸	11 B180 00❸
11 B115 00❸	11 B145 00❸	11 B180 00❸
BF65 00A❷	BF80 00A❷	11 BF115 00❸
RF200 125	RF200 150	RF200 200
––	––	––
11 G372	11 G372	11 G372
TM ST❹	TM ST❹	TM ST❹
11 G350	11 G350	11 G350
11 G354	11 G354	11 G354
BFX10 11	BFX10 11	11 G354
––	––	––
GE0630 N❼	GE0630 N❼	GE0800 N❼
500 (NH)	630 (NH)	700 (NH)
11 B250 00❸	11 B250 00❸	11 B310 00❸
ADXL 0195 600	ADXL 0250 600	ADXL 0320 600
GE0250 N❻	GE0250 N❻	GE0400 N❻
200 (NH)	250 (NH)	315 (NH)
❾	❾	❾

★ The range of the thermal overload relay must be set to a value equal to 58% of the rated motor current.

■ Up to 40A motor protection circuit breakers with push button control (SM1P) are suggested. Alternatively, there are available models with rotary knob (SM1R) that provide a higher level of interruption. See general catalogue.

MOTOR STARTING CONFIGURATOR

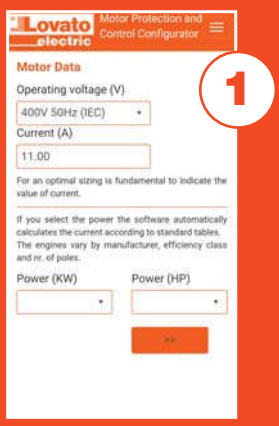

Set the motor data.

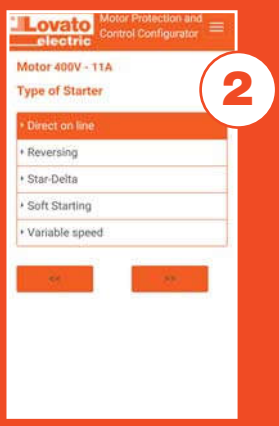

Select the type of starter: direct, reversing, star-delta, soft starters, variable speed.

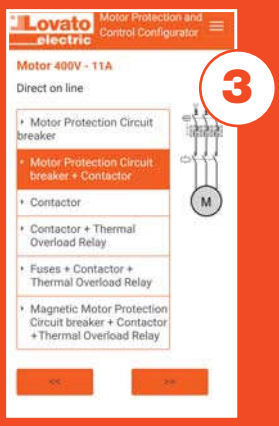

Select the combination of command components and protection.

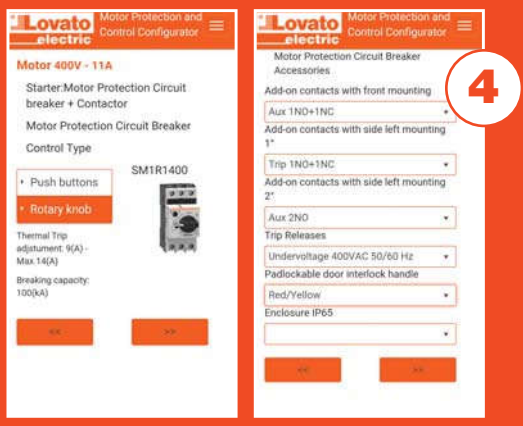

The configurator will guide you to the choice of components and accessories, and will generate a detailed list of codes to be ordered.



You can connect to the web site to consult the data sheets for each component. Immediately transmit list of order codes.





MOTOR PROTECTION CIRCUIT BREAKERS

SM1...


SM1X11...


SM1X12... SM1X13...


SM1X14... SM1X15... SM1X16...

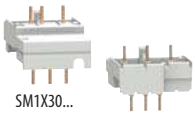
SM1X30... SM1X31... SM1X32...

Order code	Characteristics
Add-on auxiliary contacts.	
SM1X11 20	Front mount 2NO
SM1X11 11	Front mount 1NO+1NC
SM1X12 20	Side mount 2NO
SM1X12 11	Side mount 1NO+1NC
SM1X12 02	Side mount 2NC
SM1X13 11	Side mount. Contacts for thermal and magnetic tripping indication 1NO+1NC
SM1X13 11M	Side mount. Contacts for magnetic tripping indication 1NO+1NC
Undervoltage trip relelases.	
SM1X14 110	110VAC 50/60Hz
SM1X14 230	230VAC 50/60Hz
SM1X14 400	400VAC 50/60Hz
SM1X15 110R	With early-make contacts 110VAC 50/60Hz
SM1X15 230R	With early-make contacts 230VAC 50/60Hz
SM1X15 400R	With early-make contacts 400VAC 50/60Hz
Shunt trip releases.	
SM1X16 024	24VAC 50/60Hz
SM1X16 110	110VAC 50/60Hz
SM1X16 230	230VAC 50/60Hz
SM1X16 400	400VAC 50/60Hz
Rigid SM1 breaker - contactor connections.	
SM1X30 40P	For motor protection circuit breaker SM1P... with BG... mini-contactors
SM1X31 41P	For motor protection circuit breaker SM1P... with BF09...25A contactors
SM1X32 41P	For motor protection circuit breaker SM1P... with BF26...38A contactors

SM1R... type

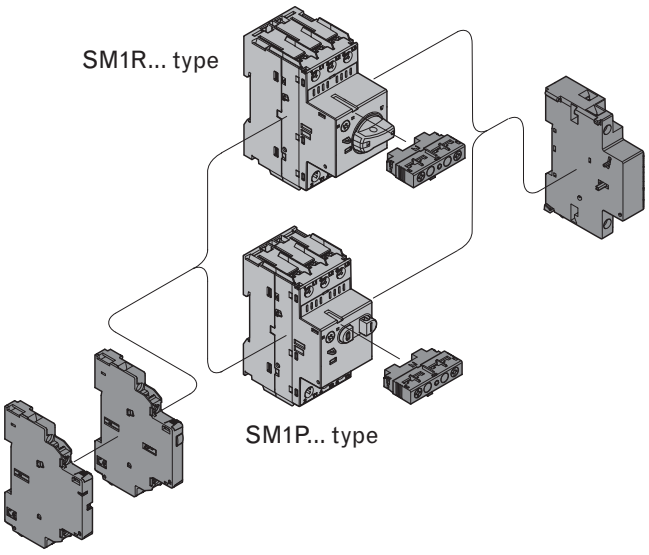

SM1P... type

SM2... and SM3...


SM2X11...


SM2X12... SM2X13 11


SM2X14... SM2X16...

Order code	Characteristics
Add-on auxiliary contacts.	
SM2X11 20	Front mount 2NO
SM2X11 11	Front mount 1NO+1NC
SM2X11 02	Front mount 2NC
SM2X12 20	Side mount 2NO
SM2X12 11	Side mount 2NC
SM2X12 02	Side mount 1NO+1NC
SM2X13 11	Side mount. Contacts for thermal and magnetic tripping indication 1NO+1NC
Undervoltage trip relelases.	
SM2X14 230	230VAC 50/60Hz
SM2X14 400	400VAC 50/60Hz
SM2X14 400	440VAC 50/60Hz
Shunt trip releases.	
SM2X16 024	24VAC 50/60Hz
SM2X16 110	110VAC 50/60Hz
SM2X16 230	230VAC 50/60Hz
SM2X16 400	400VAC 50/60Hz
SM2X16 440	440VAC 50/60Hz

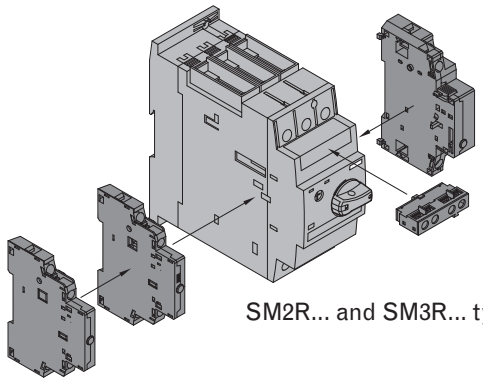
SM2R... and SM3R... type

SOFT STARTER


CX 01


CX 02


EXC RDU1


EXC 1042


EXP80 03

Order code	Characteristics
CX 01	USB connection dongle PC÷ADXL for programming, data download, diagnostics and firmware update
CX 02	Wi-Fi connection dongle PC÷ADXL for programming, data download, diagnostics and configuration cloning
EXC RDU1	Remote keypad, LCD graphic touchscreen display, 128x112 pixels, IP65 and 4X protection rating, 3m long cable
EXC 1042	RS485 communication card
EXP80 03	DIN rail mount kit for ADXL0030...ADXL0115
EXP80 04	Fan for ADXL0030...ADXL0115 (codes ADXL0075...ADXL0115 max. of two EXP80 04 fans)

CONTACTORS



11 BGX10... (20-11-02)
11 BGX11 11



11 BGX10... (40-31-22-13-04)
11 BGX11 22



BFX10...



BFX10...



BFX12...



11 G350 - 11 G354

Order code	Characteristics
For BG... contactors. Auxiliary contacts with front mounting. Screw terminals.	
11 BGX10 02	2NC
11 BGX10 11	1NO + 1NC
11 BGX10 20	2NO
11 BGX10 04	4NC
11 BGX10 13	1NO + 3NC
11 BGX10 22	2NO + 2NC
11 BGX10 31	3NO + 1NC
11 BGX10 40	4NO
For BF... contactors. Auxiliary contacts with front mounting. Screw terminals.	
BFX10 02	2NC
BFX10 11	1NO + 1NC
BFX10 20	2NO
BFX10 04	4NC
BFX10 13	1NO + 3NC
BFX10 22	2NO + 2NC
BFX10 31	3NO + 1NC
BFX10 40	4NO
BFX10 11 11	1NO+1NC and 1EM+1LB
For BF... contactors. Auxiliary contacts with side mounting. Screw terminals.	
BFX12 02	2NC for BF00, BF09...BF80
BFX12 11	1NO+1NC for BF00, BF09...BF80
BFX12 20	2NO for BF00, BF09...BF80
For B... contactors. Auxiliary contacts with side mounting. Faston terminals.	
11 G350	2NO+1NC or 1NO+2NC reversible
11 G354	1NO+1NC

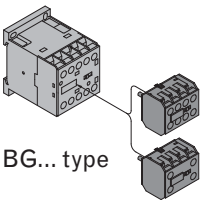

BG... type

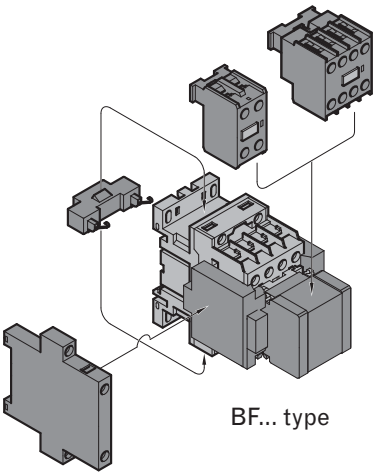

BF... type

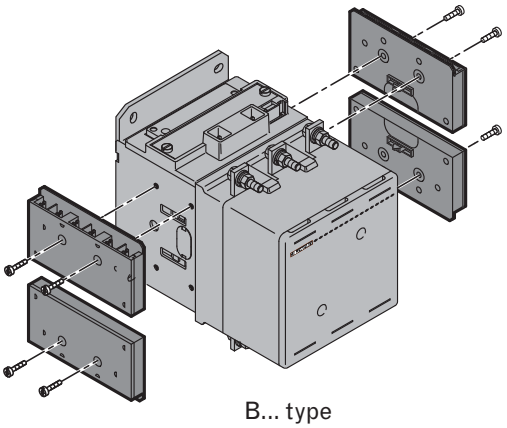

B... type

VARIABLE SPEED DRIVES



VLBX C01



VLBX C02



VLBX L...

Order code	Characteristics
Modules.	
VLBX C01	Display and keyboard
VLBX C02	USB communication module
VLBX C03	Wi-Fi communication module
VLBX SM	Safety input module (STO)
Logic units.	
VLBX L01	Logic unit with canOPEN
VLBX L02	Logic unit with ProfiBUS
VLBX L03	Logic unit with ProfiNET (available upon request)
VLBX L04	Logic unit with Ethercat (available upon request)
VLBX L05	Logic unit with EthernetIP (available upon request)
VLBX L06	Logic unit with Modbus



EXC RDU1

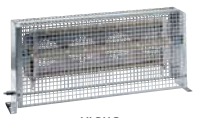

VLBX R...

Order code	Characteristics
Remote units.	
EXC RDU1	LCD graphic touchscreen display, for monitoring and remote control, IP65 and 4X protection rating, 3m long cable
VLBX P01	Door-mount installation kit for VLBX C0... display and modules
Order code	**Output variable speed drives [kW]**
Braking resistors.	
VLBX R390	0.4...0.75 kW
VLBX R180	4.5...2.2 kW
VLBX R018	15 kW
VLBX R015	18.5...22 kW
VLBX R007	30...75 kW

Lovato electric
ENERGY AND AUTOMATION

The products described in this document are subject to updates or modifications at any time. The descriptions, technical and functional information, illustrations and instructions in the leaflet are to be considered as purely illustrative, and consequently have no contractual relevance. Remember also that the products themselves must be used by qualified personnel, in compliance with current plant-engineering installation regulations, in order to avoid damage to persons or property.

Lovato electric

ENERGY AND AUTOMATION

www.LovatoElectric.com

LOVATO ELECTRIC S.P.A.

via Don E. Mazza, 12
24020 Gorle (Bergamo), Italy

tel. +39 035 4282111
fax + 39 035 4282200
info@LovatoElectric.com

Follow us

PD116 GB 06 16