Switch guards

For switch series 12000 - 3500 - 600H - 6000



DISTINCTIVE FEATURES

Prevent accidental lever operation
Many options available
Designed for Ø 11.9 or Ø 12 mm bushing
Models for 2 or 3 positions switches
Ø 1.5 mm holes for wiring a seal optional



ENVIRONMENTAL SPECIFICATIONS

- Salt spray test : 96 hours (IEC 68-2-11)
- Operating temperature : -40 °C to +85 °C (-40 °F to +185 °F)

APEM products may be recycled at end-of-life for the re-claiming of valuable metal components.

MATERIALS

- Support plate : black stainless steel
- Cap : thermoset or thermoplastic (20PN, 200PN, 300PN)

APEM products may be recycled at end-of-life for the re-claiming of valuable metal components.

The company reserves the right to change specifications without notice.

Switch guards

For switch series 12000 - 3500 - 600H - 6000

SERIES 20 - WITH STANDARD BUSHING FOR 2-POSITION SWITCHES

Lever returned then locked in down position (OFF)



Model No	Color
22	Grey
23	White
24	Orange
25	Black
26	Red
27	Green
28	Yellow
29	Blue
25/28	Black/yellow striped

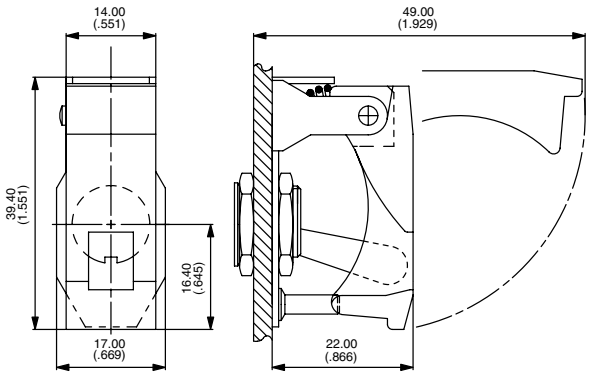

SERIES 20PN - WITH STANDARD BUSHING FOR 2-POSITION SWITCHES

Lever returned then locked in down position (OFF)



Model No	Color
22PN	Grey
23PN	White
24PN	Orange
25PN	Black
26PN	Red
27PN	Green
28PN	Yellow
29PN	Blue

On this model, holes for wiring a seal are standard.

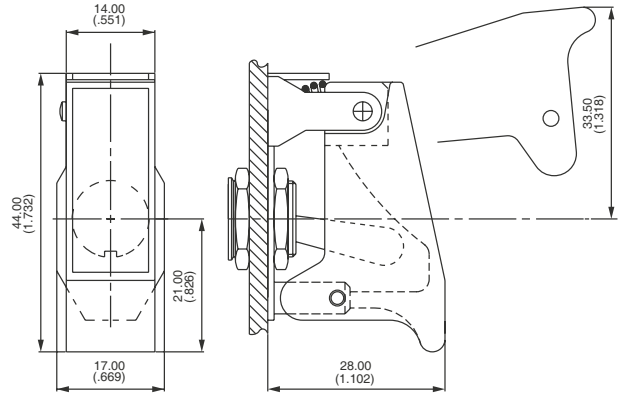

SERIES 30 FOR 3-POSITION SWITCHES

Lever returned then locked in upper position



Model No	Color
32	Grey
33	White
34	Orange
35	Black
36	Red
37	Green
38	Yellow
39	Blue
35/38	Black/yellow striped

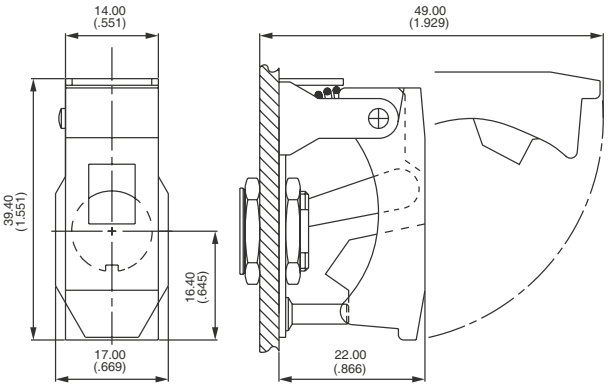

SERIES 40 - WITH STANDARD BUSHING FOR 2-POSITION SWITCHES

Lever returned then locked in upper position



Model **140** (with smaller aperture) recommended for the 12000 series.

Model No	Color
42	Grey
43	White
44	Orange
45	Black
46	Red
47	Green
48	Yellow
49	Blue
45/48	Black/yellow striped

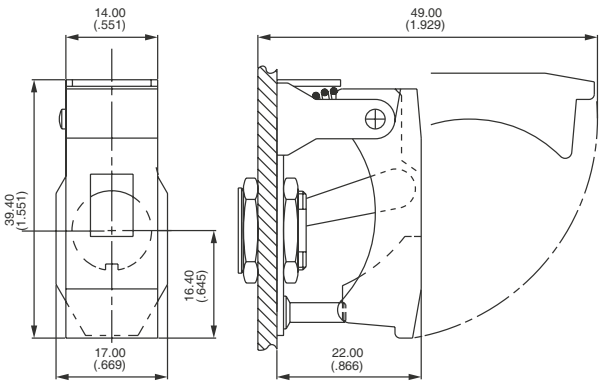

Switch guards

For switch series 12000 - 3500 - 600H - 6000

SERIES 80
FOR 3-POSITION SWITCHES

Lever returned then locked in center position



Model No	Color
82	Grey
83	White
84	Orange
85	Black
86	Red
87	Green
88	Yellow
89	Blue

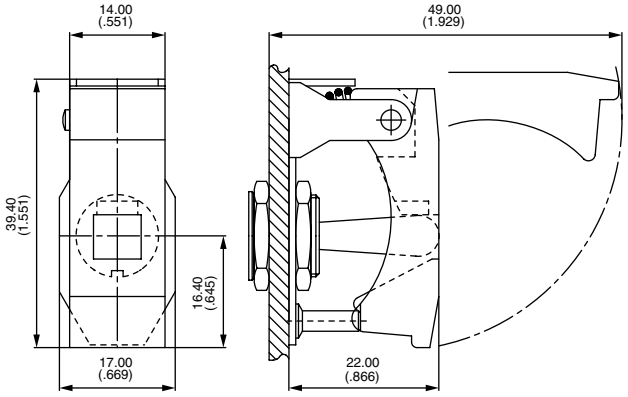

SERIES 200 - WITH STANDARD BUSHING
FOR 2-POSITION SWITCHES

Lever returned then locked either in lower or in upper position



Model No	Color
202	Grey
203	White
204	Orange
205	Black
206	Red
207	Green
208	Yellow
209	Blue

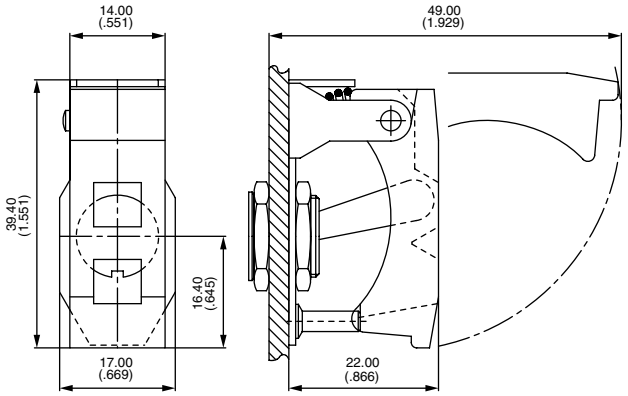

SERIES 200PN - FOR 2 OR 3-POSITION SWITCHES
ACTION PREVENTER

Lever not locked, but protected in the position where left by the user



Model No	Color
202PN	Grey
203PN	White
204PN	Orange
205PN	Black
206PN	Red
207PN	Green
208PN	Yellow
209PN	Blue

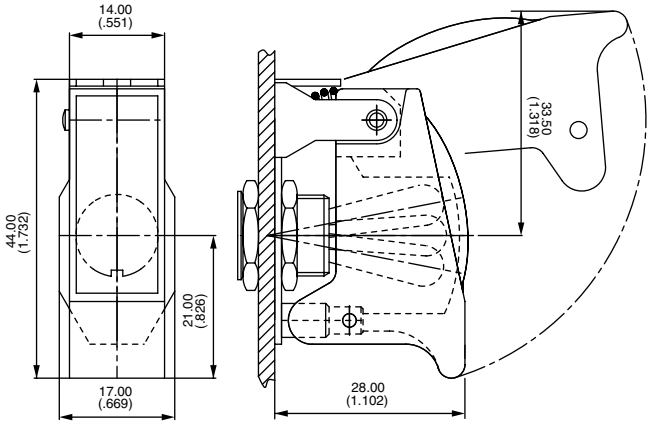

SERIES 50
FOR 2-POSITION SWITCHES

Lever returned then locked in down position (OFF)



Model No	Color
52	Grey
53	White
54	Orange
55	Black
56	Red
57	Green
58	Yellow
59	Blue
55/58	Black/yellow striped

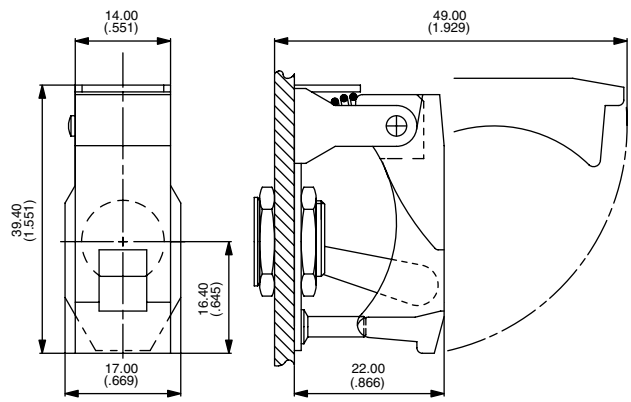

Switch guards

For switch series 12000 - 3500 - 600H - 6000

SERIES 60
FOR 3-POSITION SWITCHES

Lever returned then locked in upper position



Model No	Color
62	Grey
63	White
64	Orange
65	Black
66	Red
67	Green
68	Yellow
69	Blue
65/68	Black/yellow striped

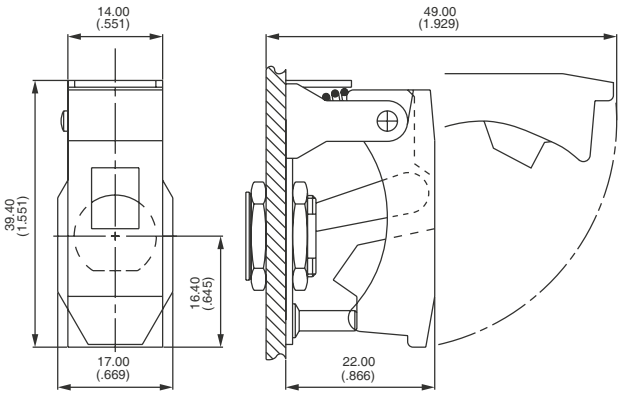

SERIES 70
FOR 2-POSITION SWITCHES

Lever returned then locked in upper position



Model **170** (with smaller aperture) recommended for the 12000 series.

Model No	Color
72	Grey
73	White
74	Orange
75	Black
76	Red
77	Green
78	Yellow
79	Blue
75/78	Black/yellow striped

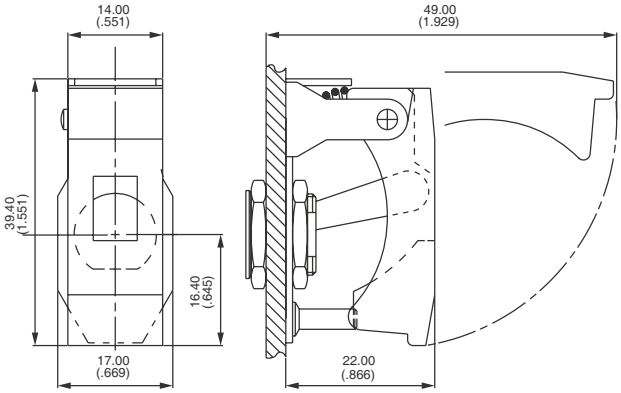

SERIES 100
FOR 3-POSITION SWITCHES

Lever returned then locked in center position



Model No	Color
102	Grey
103	White
104	Orange
105	Black
106	Red
107	Green
108	Yellow
109	Blue

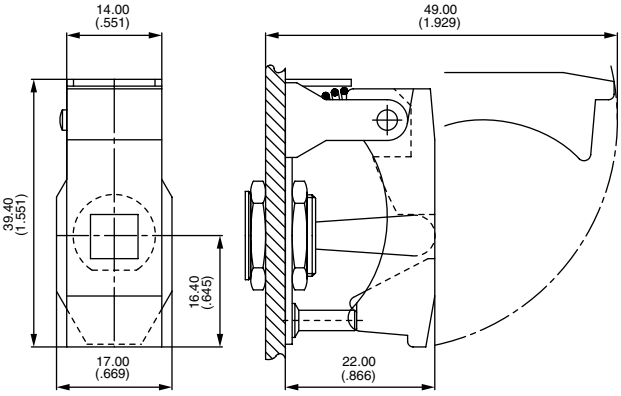

SERIES 300PN
FOR 2 OR 3-POSITION SWITCHES

Lever not locked, but protected in the position where left by the user.



Model No	Color
302PN	Grey
303PN	White
304PN	Orange
305PN	Black
306PN	Red
307PN	Green
308PN	Yellow
309PN	Blue

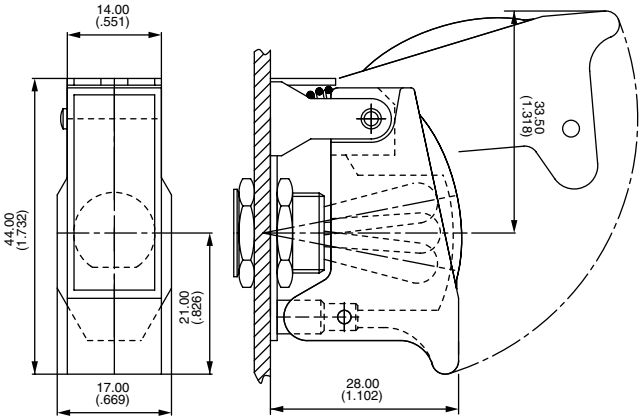

Switch guards

For switch series 12000 - 3500 - 600H - 6000

SERIES 500
FOR 2-POSITION SWITCHES

Lever returned then locked either in lower or in upper position



Model No	Color
502	Grey
503	White
504	Orange
505	Black
506	Red
507	Green
508	Yellow
509	Blue

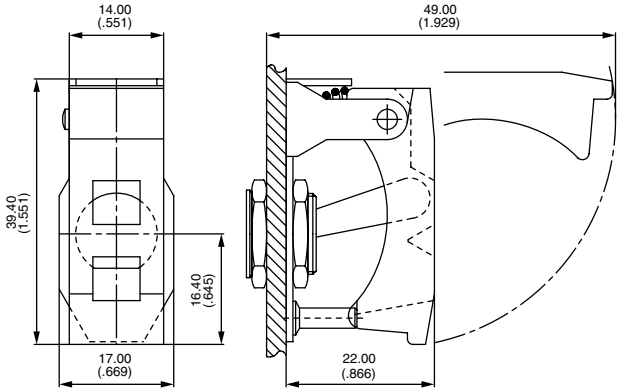

OPTIONS

BASIC P/N .....

P Holes for wiring a seal

Cap engraving available : consult factory.

