WATERPROOF GT 44-19 PSS

Waterproof polypropylene tool case





General features

- waterproof and airtight (IP 67)
- interstackable
- corrosionproof, sandproof and dustproof
- shockproof and crushproof
- temperature rating -33°C/+90°C
- ergonomic handle, rubber coated grip
- jam free latches with user-friendly opening mechanism
- corrosion proof metal hinges with lid stay features
- manual pressure release valve (Art. PURGEVALVE.B)
- sealing O-ring (Art. NEOSEAL + item nr.)

Features

- document wallet
- 2 tool pallets with PSS™ system
- bottom tray with high stability divider modules
- 2 small component boxes

Versions

WATERPROOF GT 44-19 PEL
WATERPROOF GT 44-19 PSS
WATERPROOF GT 44-19 PTS
WATERPROOF GT 51-22 PEL
WATERPROOF GT 51-22 PTS
WATERPROOF GT 53-26 PEL
WATERPROOF GT 53-26 PTS
WATERPROOF GT 58-23

EAN

8024482015552

Technical features	A	B	C	D	E
mm internal dimensions	445	345	190	47	143
	Weight Kg 6,50				
inc internal dimensions	17 1/2	13 9/16	7 1/2	1 7/8	5 5/8
	Weight lbs 14.33				

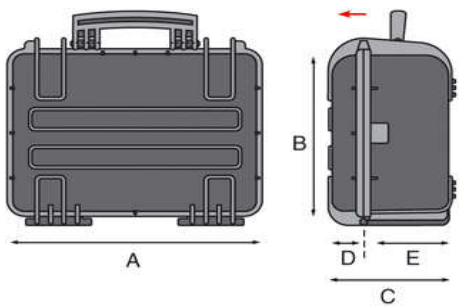

Copyright © 2017 - GT Line srl - Via del Lavoro, 50/52 - 40053 Loc. Crespellano – Valsamoggia (Bologna) - Italy - Phone +39/051/65041 - Fax +39/051/734925
sales@gtline.com - www.gtline.com