KSC Series
Sealed Tact Switch for SMT

Features/Benefits

- *Positive tactile feeling*
- *J or G terminations*
- *Tape & reel*
- *IP 67*

Typical Applications

- *Automotive*
- *Cellular phones*
- *Industrial electronics*
- *Network infrastructure and IT*

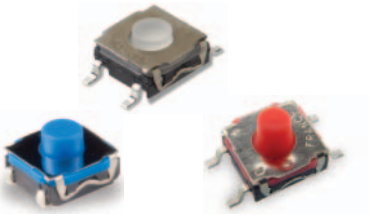

Specification

FUNCTION: Momentary action
CONTACT ARRANGEMENT: 1 make contact = SPST, N.O.
TERMINALS: J bend & Gullwing type for SMT

Mechanical

Type	Operating force FA (Newtons) Min/Max	Operating life (operations)	Travel (mm)
KSC121J	1.2 / 2.5	200,000	0.3 ± 0.15
KSC141J	2.25 / 3.75	200,000	0.3 ± 0.15
KSC151J	4.1 / 6.9	100,000	0.35 ± 0.15
KSC201J	0.9 / 2.0	300,000	0.3 +0.2 /-0.15
KSC221J	1.5 / 2.5	500,000	0.35 +0.3 /-0.1
KSC222J	1.5 / 2.5	1,000,000	0.35 +0.3 /-0.1
KSC241J	2.6 / 4.4	300,000	0.5 ± 0.2
KSC251J	4.1 / 7.0	300,000	0.5 ± 0.2
KSC321J	1.6 / 2.4	300,000	0.2 +0.3 /0
KSC341J	2.25 / 3.75	300,000	0.2 +0.3 /0
KSC351J	4.0 / 6.0	100,000	0.25 +0.3 /0
KSC401J 50SH	0.82 / 1.38	5,000,000	0.3 ± 0.15
KSC411J 70SH	1.05 / 1.75	1,000,000	0.35 ± 0.20
KSC421J 70SH	1.25 / 2.12	300,000	0.5 ± 0.25
KSC422J 70SH	1.25 / 2.12	1,000,000	0.5 ± 0.25
KSC441J 70SH	3.0 / 5.0	300,000	0.75 ± 0.25
KSC442J 70SH	3.0 / 5.0	1,000,000	0.75 ± 0.25
KSC621J	1.0 / 1.65	300,000	0.5 ± 0.2
KSC641J	2.25 / 3.75	300,000	0.5 ± 0.2
KSC721 J	1.7 / 2.8	300,000	0.3 ± 0.15
KSC741J	2.9 / 4.9	300,000	0.4 ± 0.20
KSC821JLFS	2.4 / 3.9	300,000	0.65 ± 0.2

A detect switch version is available KSC4D1J and KSC4D1G. Please see Detect chapter.
For other versions, please refer to KSC5, KSC9, KSC4V and KSC-ST datasheets.

Electrical

	Silver	Gold
MAXIMUM POWER:	1 VA	0.2 VA
MAXIMUM VOLTAGE:	32 VDC	32 VDC
MINIMUM VOLTAGE:	20 mV	20 mV
MAXIMUM CURRENT:	50 mA	10 mA
MINIMUM CURRENT:	1 mA*	1 mA

DIELECTRIC STRENGTH (50 Hz, 1 min.): 250 V
CONTACT RESISTANCE: < 100 mΩ
INSULATION RESISTANCE (100 V): > 10^9 Ω
BOUNCE TIME: < 1 ms
* Ultra low current with 1µA version are available upon request for KSC2 and KSC4

Environmental

	Silver	Gold
OPERATING TEMPERATURE:	-40°C to 85°C	-40°C to 125°C
STORAGE TEMPERATURE:	-55°C to 85°C	-55°C to 125°C

Process

SOLDERING: Depending on the application, this component is suited to the following methods:
– Terminals being silver or gold plated over a nickel barrier, the use of slightly activated flux is suitable.
– Soldering on double wave machine for vertical versions: soldering time < 5 sec.
– Cleaning according to typical washing processes.
– Infrared Reflow Soldering in accordance with IEC 61760-1.

Packaging

KSC1, KSC2 and KSC3 are delivered on continuous tape and reels of 2,000 pieces, KSC4 in reels of 1,000 pieces. KSC 6 in reels of 750 pieces. KSC7 in reels of 1,000 pieces. Dimensions of reels according to EIA RS481 or IEC 60286-3. External diameter 330 mm ± 2 mm.

NOTE: Specifications listed above are for switches with standard options.

Other versions in terms of force, termination length and corrosion protection available. Please contact your sales representative.

This data sheet does not provide enough information for applications which require a certain level of quality or safety such as automotive, medical systems, safety equipment. Please contact your sales representative to get contractual specification package.

How To Order

Our easy build-a-switch concept allows you to mix and match options to create the switch you need. To order, select desired option from each category and place it in the appropriate box.
For any part number different from those listed above, please consult your local representative.

K S C [ ] [ ] [ ] [ ] [ ] [ ] S H [ ] [ ] [ ]

Actuator
1 Without, H=2,5 mm
2 Soft, H=3,5 mm
3 Hard, H=3,5 mm
4 Soft, H=5,2 mm
6 Hard, H=7,7 mm
7 Soft, H=4,3 mm****
8 Hard, H=4,9 mm

Operating Force
0 1.2 N (120 grams)
1 1.4 N (140 grams)
2 1.6 N / 1.7 N * (160/170 grams)
4 3 N / 4 N * (300/400 grams)
5 5.5 N (550 grams)
6 4.5 N / 8.0 (450/800 grams)

Contact Material Operating life
1 Silver
2 Silver long life
3 Gold
4 Gold long life

Termination
J J bend
G Gull wing

Rubber Hardness Indication***
50 Shore**
70 Shore***

LFS Lead free compatible, silver plated.
LFG Lead free compatible, gold plated.

* See Mechanical chart above to confirm specifications
** Applies to KSC401J50SH only
*** Applies to KSC 411J70SH, KSC421J70SH,KSC441J70SH
**** KSC7 offered with blue actuator as standard
***** Other actuator materials are available, please refer to KSC-ST datasheet

Dimensions are shown: mm (inches)
Specifications and dimensions subject to change

KSC Series
Sealed Tact Switch for SMT

ACTUATOR

KSC1 WITHOUT, 2.5 mm HIGH

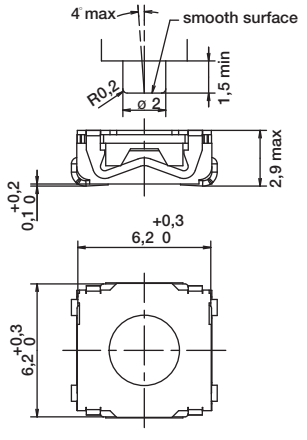

KSC2 SOFT, 3,5 mm HIGH

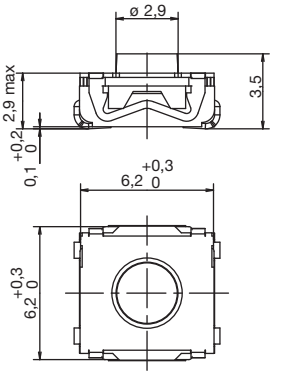

KSC3 HARD, 3,5 mm HIGH

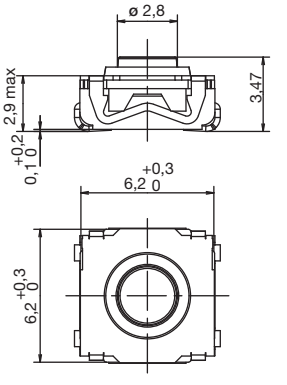

KSC4 SOFT, 5,2 mm HIGH

NOTE: Soft material available are silicon 50 SH / 70 SH and EPDM, please refer to KSC-ST datasheet.

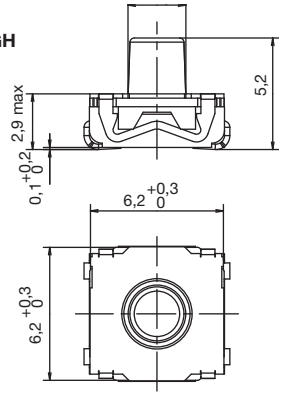

KSC6 HARD, 7,7 mm HIGH

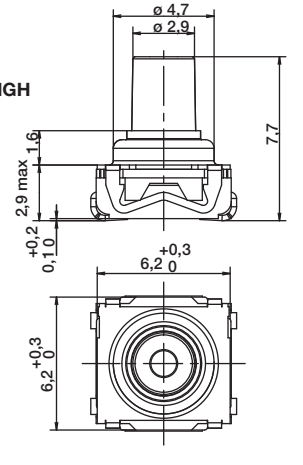

KSC7 SOFT, 4,3 mm HIGH, BLUE ACTUATOR

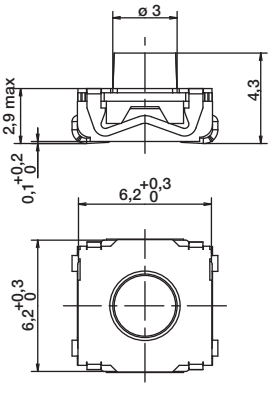

KSC8 HARD, 4,9 mm HIGH

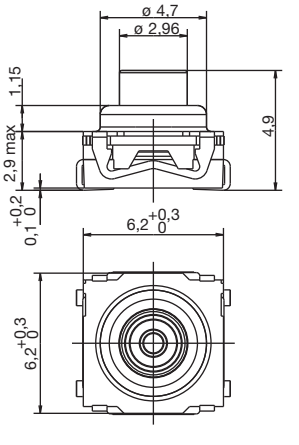

First Angle Projection

Dimensions are shown: mm (inches)
Specifications and dimensions subject to change

OPERATING FORCE

OPTION CODE	OPERATING FORCE
0	1.2 N (120 grams)
1	1.4 N (140 grams)
2	1.6 N / 1.7 N (160/170 grams)
4	3 N / 4 N (300/400 grams)
5	5.5 N (550 grams)
6	4.5 N / 8 N (450/800 grams)

CONTACT MATERIAL

OPTION CODE	MATERIAL
1	SILVER
2	SILVER LONG LIFE
3	GOLD
4	GOLD LONG LIFE

TERMINATION

J J BEND

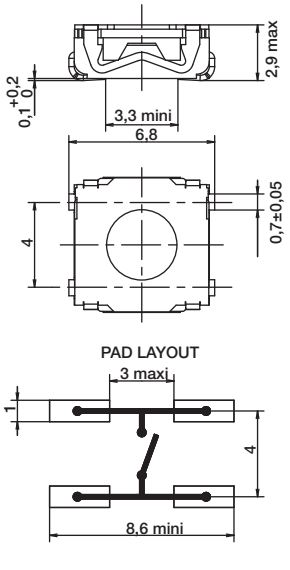

G GULLWING

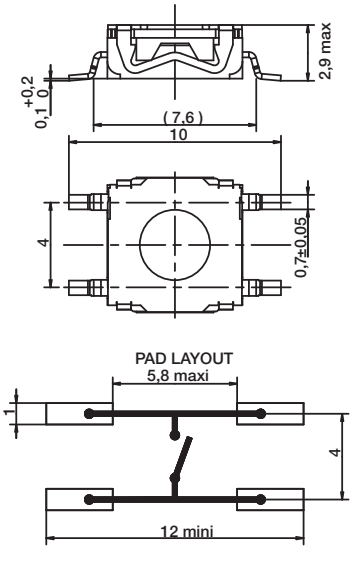

First Angle Projection

Dimensions are shown: mm (inches)
Specifications and dimensions subject to change

TAPE & REEL

FOR KSC1 J TERMINATION

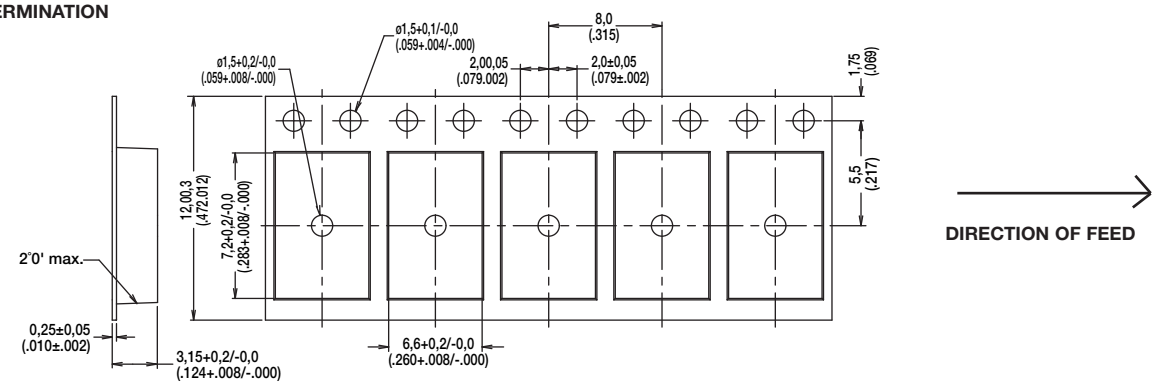

FOR KSC1 G TERMINATION

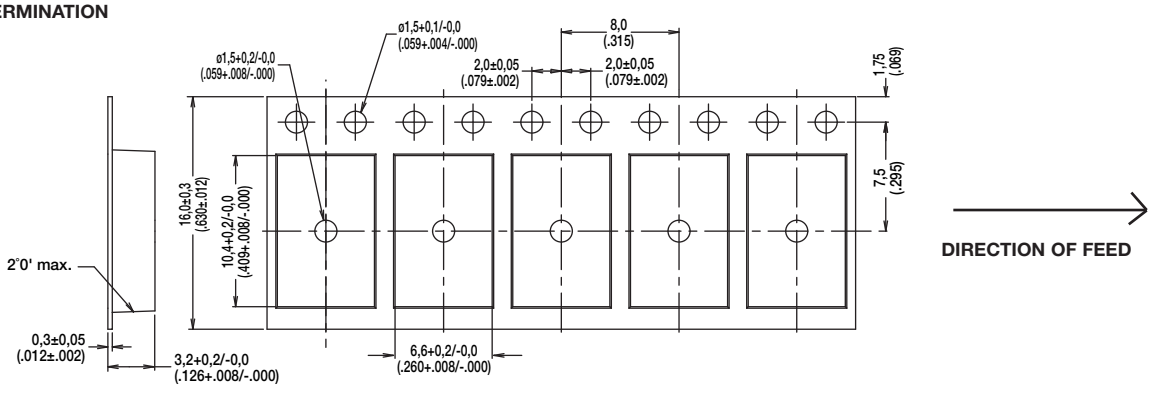

FOR KSC2 & KSC3 J TERMINATION

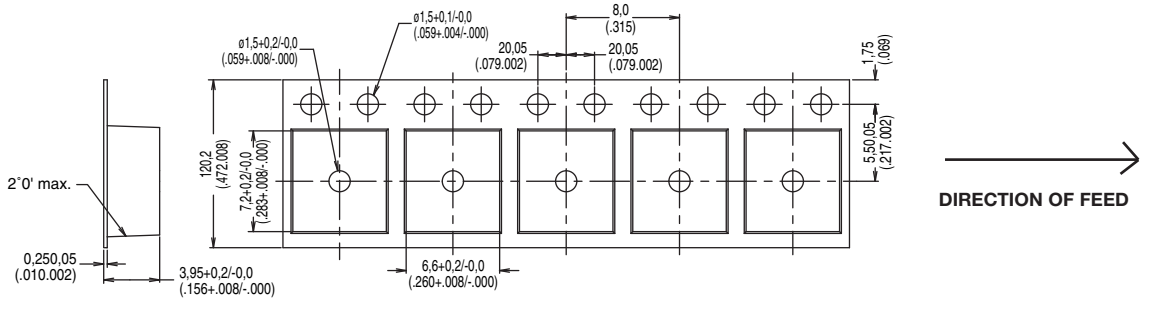

FOR KSC2 & KSC3 G TERMINATION

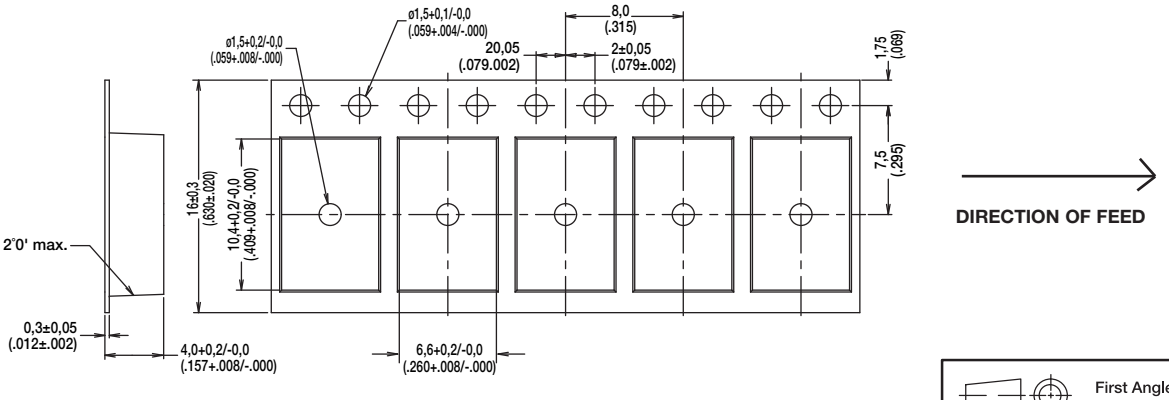

First Angle Projection

Dimensions are shown: mm (inches)
Specifications and dimensions subject to change

TAPE & REEL

FOR KSC4 FOR G TERMINATION

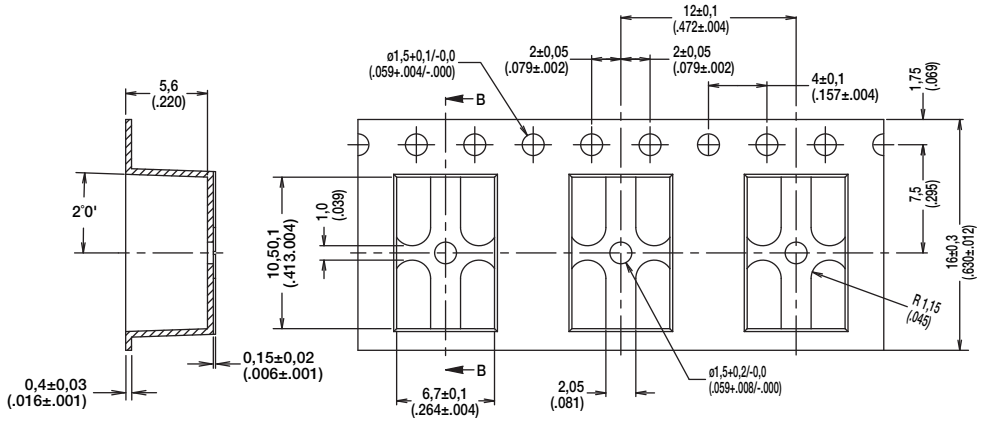

FOR KSC4 FOR J TERMINATION

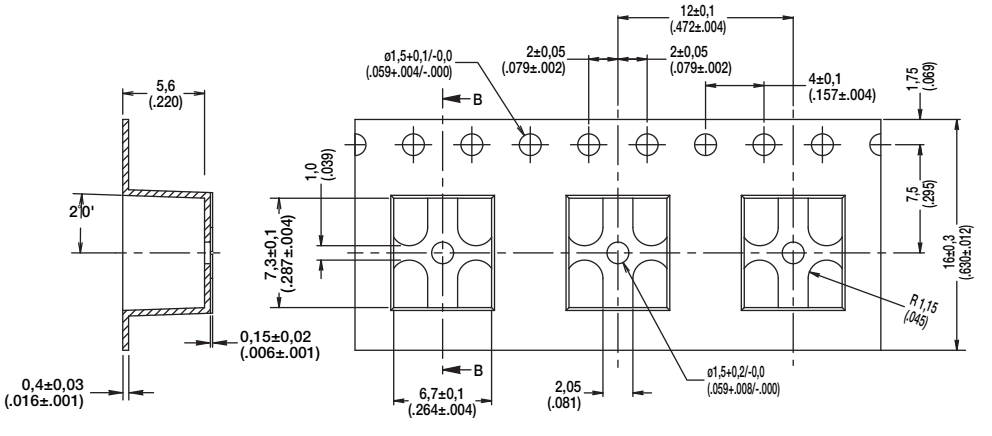

FOR KSC6 G & J TERMINATION

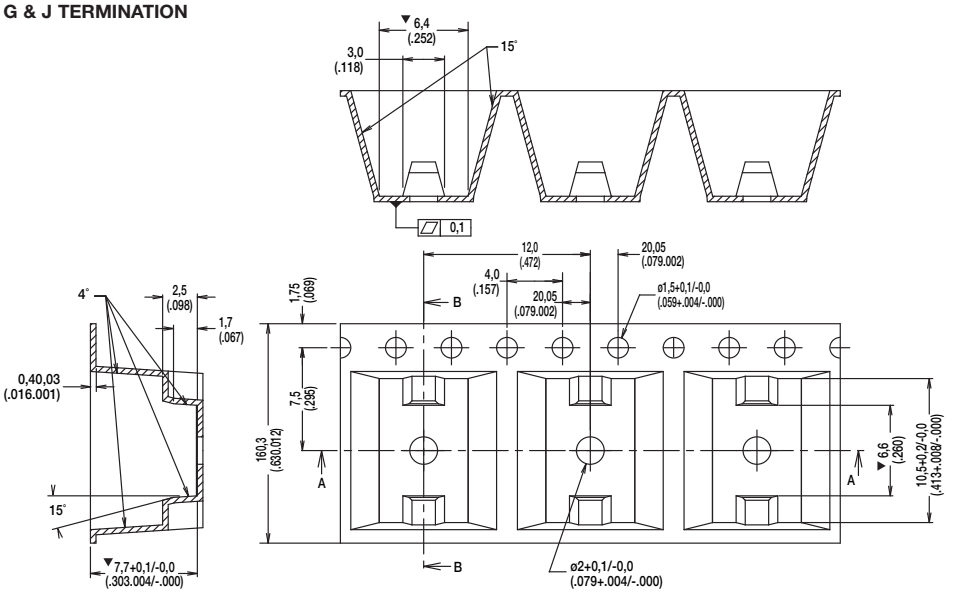

First Angle Projection

Dimensions are shown: mm (inches)
Specifications and dimensions subject to change

TAPE & REEL

FOR KSC7 FOR J TERMINATION

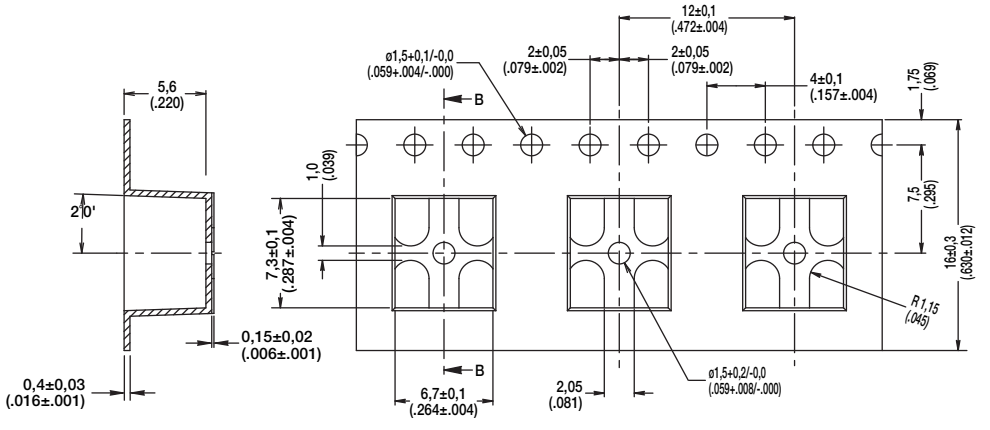

FOR KSC8 FOR G TERMINATION

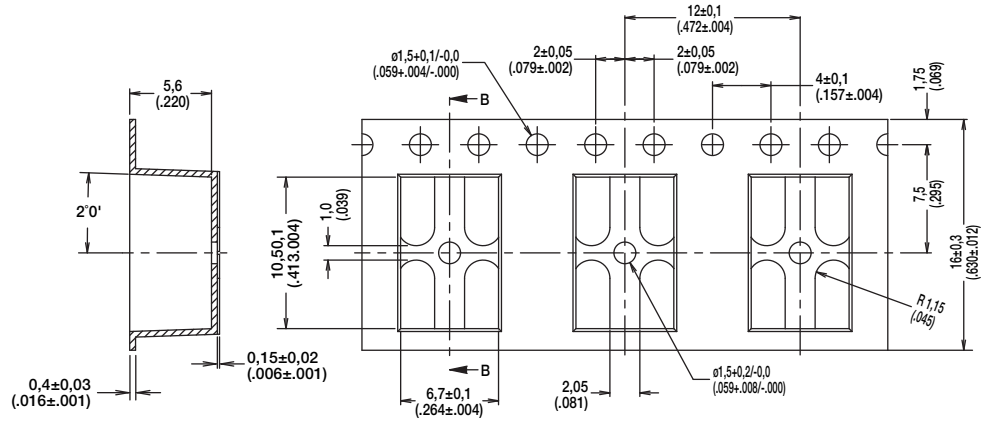

Direction of feed

FOR KSC8 FOR J TERMINATION

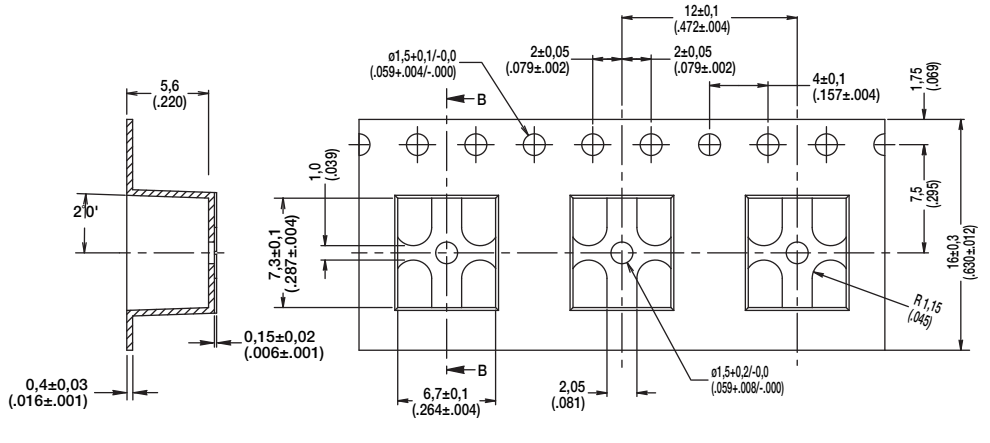

Direction of feed

First Angle Projection

Dimensions are shown: mm (inches)
Specifications and dimensions subject to change