finder®
SWITCH TO THE FUTURE

Modular contactors
25 - 40 - 63 A

- Hotel room energy-enabling units
- Garden and night lighting
- Streetlights and car park lighting
- Bathrooms lighting control
- Office lighting control
- Pump control



22
SERIES

FINDER reserves the right to alter characteristics at any time without notice. FINDER assumes no liability for damage to persons or property, caused as a result of the incorrect use or application of its products.

25 A modular contactor - 2 pole

- 17.5 mm wide
- NO contact gap ≥ 3 mm, double break
- Continuous duty for the coil and contacts
- AC/DC silent coil (with varistor protection)
- Protective separation (reinforced insulation) between coil and contacts
- Mechanical and LED indicators as standard
- Auto-On-Off selector version available
- AgNi and $AgSnO_2$ contact versions available
- Compliant with EN 61095: 2009
- Auxiliary contact module available, quick-assembly with the main contactor (1 NO + 1 NC and 2 NO versions)
- For railway applications; materials compliant with fire and smoke characteristics (EN 45545-2 + A1: 2016)
- 35 mm rail (EN 60715) mount

22.32…1xx0/22.32…4xx0
Screw terminal



For outline drawings see page 10

	22.32.0.xxx.1xx0	**22.32.0.xxx.4xx0**
		
	• AgNi contacts, specifically intended for resistive and slightly inductive loads as well as for motor loads	• $AgSnO_2$ contacts, specifically intended for lamp loads and for high inrush current loads
	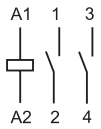 2 NO (x3x0)	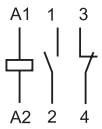 1 NO + 1 NC (x5x0)
	 2 NC (x4x0)	

Contact specification			
Contact configuration		2 NO, 3 mm* (or 1 NO + 1 NC or 2 NC)	
Rated current/Maximum peak current	A	25/80	25/120
Rated voltage	V AC	250/440	250/440
Rated load AC1 / AC-7a (per pole @ 250 V)	VA	6250	6250
Rated current AC3 / AC-7b	A	10	10
Rated load AC15 (per pole @ 230 V)	VA	1800	1800
Single-phase motor rating (230 V AC)	kW	1	1
Rated load AC5a (per pole @ 250 V)	A	15	15
Rated current AC-7c	A	—	10
Nominal lamp rating:			
230 V incandescent/halogen	W	800	2000
fluorescent tubes with electronic ballast	W	300	800
fluorescent tubes with electromechanical ballast	W	200	500
CFL	W	100	200
230 V LED	W	100	200
LV halogen or LED with electronic ballast	W	100	200
LV halogen or LED with electromechanical ballast	W	300	800
Breaking capacity DC1: 30/110/220 V	A	25/5/1	25/5/1
Minimum switching load	mW (V/mA)	1000 (10/10)	1000 (10/10)
Contact material		AgNi	$AgSnO_2$
Coil specification			
Nominal voltage (U_N)	V DC/AC (50/60 Hz)	12 - 24 - 48 - 60 - 120 - 230	12 - 24 - 48 - 60 - 120 - 230
Rated power AC/DC	VA (50 Hz)/W	2/2.2	2/2.2
Operating range	DC/AC (50/60 Hz)	(0.8…1.1)U_N	(0.8…1.1)U_N
Holding voltage	DC/AC (50/60 Hz)	0.4 U_N	0.4 U_N
Must drop-out voltage	DC/AC (50/60 Hz)	0.1 U_N	0.1 U_N
Technical data			
Mechanical life AC/DC	cycles	$2 \cdot 10^6$	$2 \cdot 10^6$
Electrical life at rated load AC-7a	cycles	$70 \cdot 10^3$	$30 \cdot 10^3$
Operate/release time	ms	30/20	30/20
Insulation between coil and contacts (1.2/50 µs)	kV	6	6
Ambient temperature range	°C	–20…+50	–20…+50
Protection category		IP 20	IP 20
Approvals (according to type)			

• Contact gap ≥ 3 mm for NO contacts only; NC contacts ≥ 1.5 mm

22 SERIES
Modular contactors 25 - 40 - 63 A

25 A modular contactor - 4 pole

- 35 mm wide
- NO contact gap ≥ 3 mm, double break
- Continuous duty for the coil and contacts
- AC/DC silent coil (with varistor protection)
- Protective separation (reinforced insulation) between coil and contacts
- Mechanical and LED indicators as standard
- Auto-On-Off selector version available
- AgNi and $AgSnO_2$ contact versions available
- Compliant with EN 61095: 2009
- Auxiliary contact module available, quick-assembly with the main contactor (1 NO + 1 NC and 2 NO versions)
- For railway applications; materials compliant with fire and smoke characteristics (EN 45545-2 + A1: 2016)
- 35 mm rail (EN 60715) mount

22.34…1xx0/22.34…4xx0
Screw terminal



For outline drawings see page 10

22.34.0.xxx.1xx0



- AgNi contacts, specifically intended for resistive and slightly inductive loads as well as for motor loads

22.34.0.xxx.4xx0



- $AgSnO_2$ contacts, specifically intended for lamp loads and for high inrush current loads

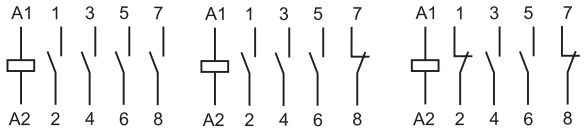

4 NO (x3x0) | 3 NO + 1 NC (x7x0) | 2 NO + 2 NC (x6x0)

Contact specification			
Contact configuration		4 NO, 3 mm* (or 3NO + 1NC or 2NO + 2NC)	
Rated current/Maximum peak current	A	25/80	25/120
Rated voltage	V AC	250/440	250/440
Rated load AC1/AC-7a (per pole @ 250 V)	VA	6250	6250
Rated current AC3/AC-7b	A	10	10
Rated load AC15 (per pole @ 230 V)	VA	1800	1800
Three-phase motor rating (400 - 440 V AC)	kW	4	4
Rated load AC5a (per pole @ 250 V)	A	15	15
Rated current AC-7c	A	—	10
Nominal lamp rating:			
230 V incandescent/halogen	W	800	2000
fluorescent tubes with electronic ballast	W	300	800
fluorescent tubes with electromechanical ballast	W	200	500
CFL	W	100	200
230 V LED	W	100	200
LV halogen or LED with electronic ballast	W	100	200
LV halogen or LED with electromechanical ballast	W	300	800
Breaking capacity DC1: 30/110/220 V	A	25/5/1	25/5/1
Minimum switching load	mW (V/mA)	1000 (10/10)	1000 (10/10)
Contact material		AgNi	$AgSnO_2$
Coil specification			
Nominal voltage (U_N)	V DC/AC (50/60 Hz)	12 - 24 - 48 - 60 - 120 - 230	12 - 24 - 48 - 60 - 120 - 230
Rated power AC/DC	VA (50 Hz)/W	2/2.2	2/2.2
Operating range	DC/AC (50/60 Hz)	(0.8…1.1)U_N	(0.8…1.1)U_N
Holding voltage	DC/AC (50/60 Hz)	0.4 U_N	0.4 U_N
Must drop-out voltage	DC/AC (50/60 Hz)	0.1 U_N	0.1 U_N
Technical data			
Mechanical life AC/DC	cycles	$2 \cdot 10^6$	$2 \cdot 10^6$
Electrical life at rated load AC-7a	cycles	$150 \cdot 10^3$	$30 \cdot 10^3$
Operate/release time	ms	18/40	18/40
Insulation between coil and contacts (1.2/50 µs)	kV	6	6
Ambient temperature range	°C	–20…+50	–20…+50
Protection category		IP 20	IP 20
Approvals (according to type)			

* Contact gap ≥ 3 mm for NO contacts only; NC contacts ≥ 1.5 mm

L

I-2019, www.findernet.com

40 - 63 A modular contactor - 4 pole

- NO and NC contact gap ≥ 3 mm, double break
- Continuous duty for the coil and contacts
- AC/DC silent coil (with varistor protection)
- Protective separation (reinforced insulation) between coil and contacts
- Mechanical indicator as standard
- $AgSnO_2$ contacts
- Compliant with EN 61095: 2009 and with EN 60947-4-1: 2009
- 35 mm rail (EN 60715) mount

22.44…/22.64…
Screw terminal



NEW **22.44.0.xxx.4xx0**



- For high inrush current loads 176 A
- Contact material $AgSnO_2$

NEW **22.64.0.xxx.4xx0**



- Specifically intended: for high inrush current loads 240 A
- Contact material $AgSnO_2$

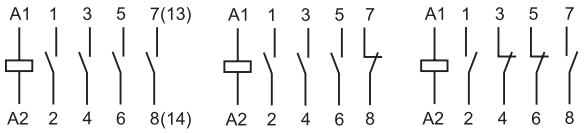

For outline drawings see page 10

		4 NO (4310)	3 NO + 1 NC (4710)	2 NO + 2 NC (4610)
Contact specification				
Contact configuration		4 NO, (or 3NO + 1NC or 2NO + 2NC) ≥ 3 mm		
Rated current/Maximum peak current	A	40/176		63/240
Rated voltage	V AC	400/440		400/440
Rated load AC1 / AC-7a (per pole @ 400 V)	VA	16000		24000
Rated current AC3 / AC-7b (400 V)	A	22		30
Rated load AC15 (per pole @ 230 V)	VA	—		—
Three-phase motor rating (400 - 440 V AC)	kW	11		15
Rated load AC5a (per pole @ 250 V)	A	20		32
Rated current AC-7c	A	—		—
Nominal lamp rating:				
230 V incandescent/halogen	W	4000		5000
fluorescent tubes with electronic ballast	W	1500		2000
fluorescent tubes with electromechanical ballast	W	1500		2000
CFL	W	1000		1500
230 V LED	W	1000		1500
LV halogen or LED with electronic ballast	W	1000		1500
LV halogen or LED with electromechanical ballast	W	1500		2000
Breaking capacity DC1: 30/110/220 V	A	40/4/1.2		63/4/1.2
Minimum switching load	mW (V/mA)	1000 (17/50)		1000 (17/50)
Contact material		$AgSnO_2$		$AgSnO_2$
Coil specification				
Nominal voltage (U_N)	V DC/AC (50/60 Hz)	12 - 24 - 110…120 (110 V DC) - 230…240 (220 V DC)		
Rated power AC/DC	VA (50 Hz)/W	5		5
Operating range	DC/AC (50/60 Hz)	(0.85…1.1)U_N		(0.85…1.1)U_N
Holding voltage	DC/AC (50/60 Hz)	0.85 U_N		0.85 U_N
Must drop-out voltage	DC/AC (50/60 Hz)	0.2 U_N		0.2 U_N
Technical data				
Mechanical life AC/DC	cycles	$3 \cdot 10^6$		$3 \cdot 10^6$
Electrical life at rated load AC-7a	cycles	$100 \cdot 10^3$		$100 \cdot 10^3$
Operate/release time	ms	20/45		20/45
Insulation between coil and contacts (1.2/50 µs)	kV	6		6
Ambient temperature range	°C	–15…+55 (–25...+55)*		–15…+55 (–25...+55)*C
Protection category		IP 20		IP 20
Approvals (according to type)		CE EAC cULus		

* 4 NO version only

Ordering information

Exemple: 22 series, modular contactor 25 A, 4 NO contacts, coil 230 V AC/DC, $AgSnO_2$ contacts, Auto-On-Off selector + mechanical indicator + LED.

														A		B		C	D
2	2	.	3	4	.	0	.	2	3	0	.	4		3		4		0	

Series

Type
3 = 25 A modular contactor range
4 = 40 A modular contactor range
6 = 63 A modular contactor range

Number of contacts
2 = 2 pole
4 = 4 pole

Coil version
0 = AC (50/60 Hz)/DC

Coil rated voltage
See coil specifications

D: Special versions
0 = Standard

C: Options
1 = Mechanical indicator
2 = Mechanical indicator + LED
4 = Auto-On-Off selector + mechanical indicator + LED

B: Contact circuit
3 = All NO contacts
4 = All NC contacts (22.32 only)
5 = 1 NO + 1 NC
6 = 2 NO + 2 NC
7 = 3 NO + 1 NC

A: Contact material
1 = AgNi
4 = $AgSnO_2$

Selecting features and options: only combinations in the same row are possible.
Preferred selections for best availability are shown in **bold.**

Type	Coil version	A	B	C	D
22.32	AC/DC	**1 - 4**	**3** - 4 - 5	**2 - 4**	0
22.34	AC/DC	**1 - 4**	**3** - 6 - 7	**2 - 4**	0
22.44	AC/DC	**4**	**3** - 6 - 7	**1**	0
22.64	AC/DC	**4**	**3** - 6 - 7	**1**	0

Options

Auto-On-Off selector + mechanical indicator + LED (xx40 option)

Type 22.32 / 22.34

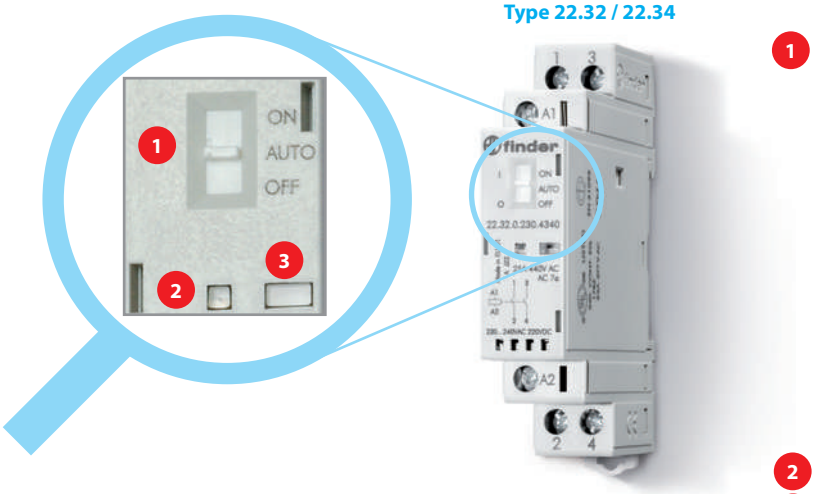

Options

1 **Selector**
The three-position manual selector has the following functions:
- **ON position** - the contacts are latched in the operated state (NO contacts - closed and NC contacts - open), the mechanical indicator is visible in its window, the LED is not illuminated.
- **AUTO position** - the state of contacts, mechanical indicator and LED follow the coil supply voltage.
- **OFF position** - even if terminals A1 - A2 are supplied with rated voltage, the coil is not energized, and so the contacts remain in the non-operated state, the mechanical indicator is not visible and the LED is not illuminated.

2 **LED**

3 **Mechanical indicator**

Type 22.44 / 22.64

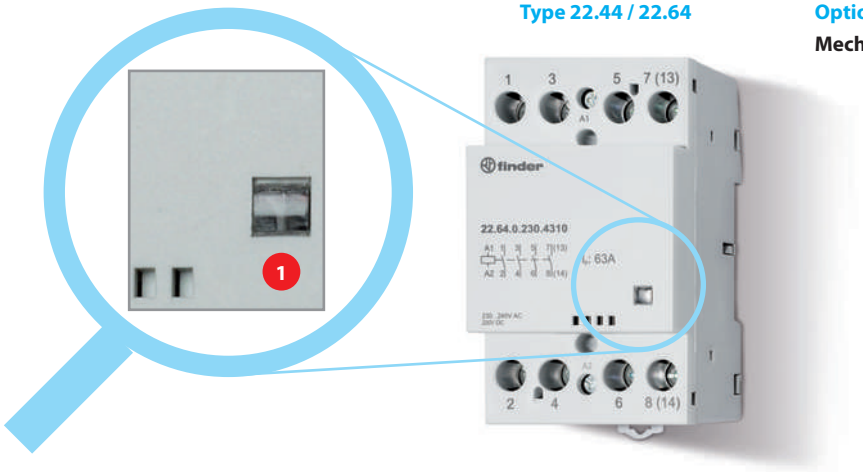

Options

Mechanical indicator

L

I-2019, www.findernet.com

Technical data

Insulation		22.32/22.34		22.44/22.64
Rated insulation voltage	V AC	250	440	440
Pollution degree		3*	2	3
Insulation between coil and contact set				
Type of insulation		Reinforced		Reinforced
Overvoltage category		III		III
Rated impulse voltage	kV (1.2/50 µs)	6		4
Dielectric strength	V AC	4000		2000
Insulation between adjacent contacts				
Type of insulation		Basic		Basic
Overvoltage category		III		III
Rated impulse voltage	kV (1.2/50 µs)	4		4
Dielectric strength	V AC	2500		2000
Insulation between open contacts		**NO contact**	**NC contact**	**NO/NC contacts**
Contact gap	mm	3	1.5	3
Overvoltage category		III	II	III
Rated impulse voltage	kV (1.2/50 µs)	4	2.5	4
Dielectric strength	V AC/kV (1.2/50 µs)	2500/4	2000/3	2000/3

* Only for versions without Auto-On-Off selector. For versions with Auto-On-Off selector pollution degree 2 applies.

Insulation between coil terminals				
Rated impulse voltage (surge) differential mode (according to EN 61000-4-5)	kV(1.2/50 µs)	4		2
Short circuit protection		**22.32 / 22.34**	**22.44**	**22.64**
Rated conditional short circuit current	kA	3	3	3
Back-up fuse	A	32 (gL/gG type)	63	80

Terminals		Solid and stranded cable	
		22.32 / 22.34	**22.44 / 22.64**
Max. wire size – contact terminals	mm^2	1 x 6 / 2 x 4	1 x 25 (solid) - 1 x 16 (stranded)
	AWG	1 x 10 / 2 x 12	1 x 4 (solid) - 1 x 6 (stranded)
Max. wire size – coil terminals	mm^2	1 x 4 / 2 x 2.5	1 x 2.5
	AWG	1 x 12 / 2 x 14	1 x 14
Min. wire size – contact and coil terminals	mm^2	1 x 0.2	1 x 1 (coil) - 1 x 1.5 (contacts)
	AWG	1 x 24	1 x 18 (coil) - 1 x 16 (contacts)
Screw torque	Nm	0.8	1.2 (coil terminals) - 3.5 (contact terminals)
Wire strip length	mm	9	10

Other data			22.32	22.34	22.44	22.64
Vibration resistance (10…150)Hz		g	4	4	3	3
Shock resistance		g	10	10	15	15
Power lost to the environment	without contact current	W	2	2	5	5
	with rated current	W	4.8	6.3	17	37

NOTE

22.32/22.34: It is suggested an air gap of 9 mm between adjacent relays for installations and working conditions close to the limit (that is, ambient temperature > 40 °C, coil operated for a prolonged period of time, all contacts loaded with current > 20 A).

22.44/22.64: The maximum ambient temperature with 3 adjacent contactors is + 40 °C; when more than 3 contactors are installed, it is necessary an air gap of 9 mm.
With 2 adjacent contactors the maximum ambient temperature is + 55 °C; when more than 2 contactors are installed, it is necessary an air gap of 9 mm.

L

Contact specification

Ratings and utilization categories according to EN 61095: 2009

Type	Utilization category					
	AC-7a		AC-7b		AC-7c	
	Rated current (A)	Rated electrical life (Cycles)	Rated current (A)	Rated electrical life (Cycles)	Rated current (A)	Rated electrical life (Cycles)
22.32….1xx0 (AgNi contacts)	25	$70 \cdot 10^3$ (NO) $30 \cdot 10^3$ (NC)	10	$30 \cdot 10^3$	—	—
22.32….4xx0 ($AgSnO_2$ contacts)	25	$30 \cdot 10^3$	10	$30 \cdot 10^3$	10	$30 \cdot 10^3$
22.34….1xx0 (AgNi contacts)	25	$150 \cdot 10^3$ (NO) $100 \cdot 10^3$ (NC)	10	$30 \cdot 10^3$	—	—
22.34….4xx0 ($AgSnO_2$ contacts)	25	$30 \cdot 10^3$	10	$30 \cdot 10^3$	10	$30 \cdot 10^3$
22.44….4xx0	40	$100 \cdot 10^3$	22	$150 \cdot 10^3$	—	—
22.64….4xx0	63	$100 \cdot 10^3$	30	$150 \cdot 10^3$	—	—

Utilization category: **AC-7a** = Slightly inductive loads (cos φ = 0.8)
AC-7b = Motor loads; (cos φ = 0.45, I_{making} = 6x $I_{breaking}$)
AC-7c = Compensated electric discharge lamps (cos φ = 0.9, C = 10 mF/A)

H 22 - Maximum DC1 breaking capacity - Type 22.32/22.34

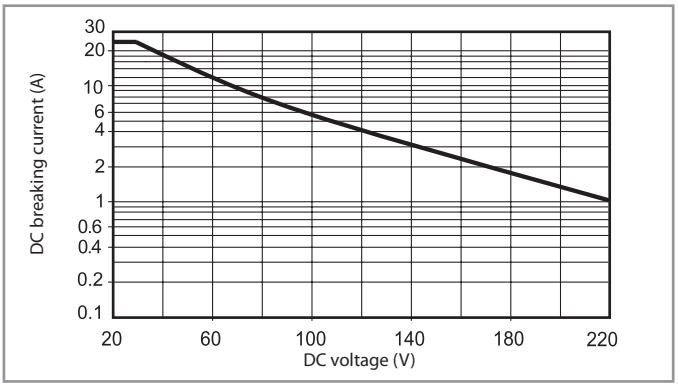

H 22 - Maximum DC1 breaking capacity - Type 22.44/22.64

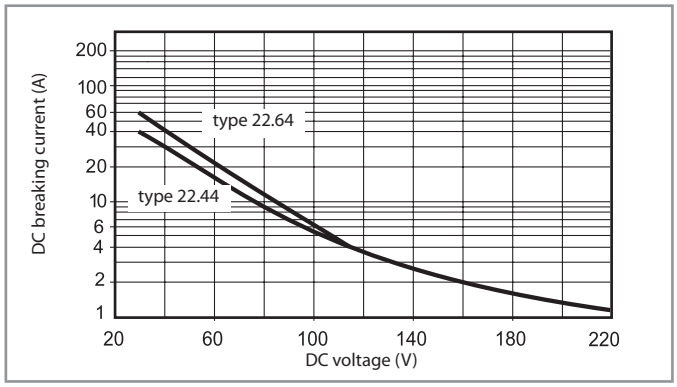

- When switching a resistive load (DC1) having voltage and current values under the curve, an electrical life of ≥ $100 \cdot 10^3$ can be expected.
- In the case of DC13 loads, the connection of a diode in parallel with the load will permit a similar electrical life as for a DC1 load.
  Note: the release time for the load will be increased.

Coil specifications

AC/DC version data (type 22.32)

Nominal voltage U_N	Coil code	Operating range U_{min}	Operating range U_{max}	Rated coil consumption I_N at U_N (AC)
V		V	V	mA
12	**0**.012	9.6	13.2	165
24	**0**.024	19.2	26.4	83
48	**0**.048	38.4	52.8	42
60	**0**.060	48	66	33
120 (110…125)	**0**.120	88	138	16.5
230 (230…240 AC) (220 DC)	**0**.230	184 (AC) 176 (DC)	264 (AC) 242 (DC)	8.7

AC/DC version data (type 22.34)

Nominal voltage U_N	Coil code	Operating range U_{min}	Operating range U_{max}	Rated coil consumption I_N at U_N (AC)
V		V	V	mA
12	**0**.012	9.6	13.2	165
24	**0**.024	19.2	26.4	83
48	**0**.048	38.4	52.8	42
60	**0**.060	48	66	33
120 (110…125)	**0**.120	88	138	16.5
230 (230…240 AC) (220 DC)	**0**.230	184 (AC) 176 (DC)	264 (AC) 242 (DC)	8.7

AC/DC version data (type 22.44 / 22.64)

Nominal voltage U_N	Coil code	Operating range U_{min}	Operating range U_{max}	Rated coil consumption I_N at U_N (AC)
V		V	V	mA
12	**0**.012	10.2	13.2	417
24	**0**.024	20.4	26.4	208
120 (110…125)	**0**.120	102	138	41
230 (230…240 AC) (220 DC)	**0**.230	196	264 (AC) 242 (DC)	21

R 22 - Coil operating range v ambient temperature

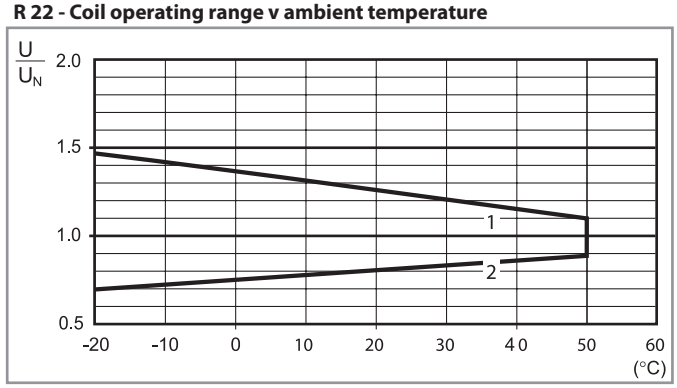

1 - Max. permitted coil voltage.
2 - Min. pick-up voltage with coil at ambient temperature.

I-2019, www.findernet.com

Wiring diagrams

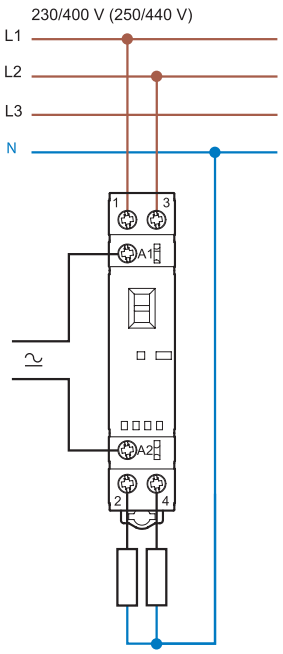

Type 22.32

Line and neutral switched

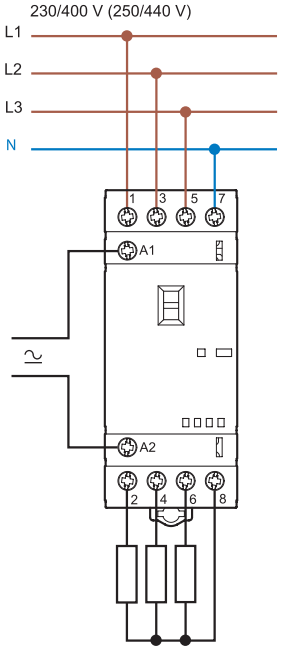

Type 22.34

Line only switched

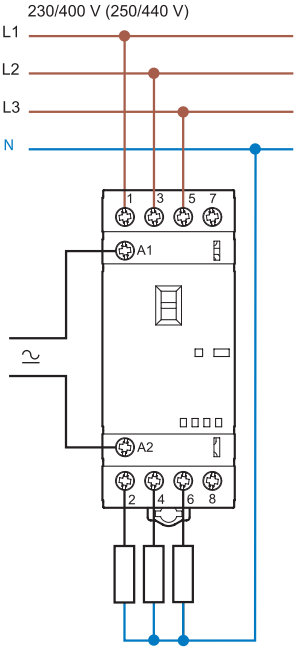

Type 22.34

Line and neutral switched

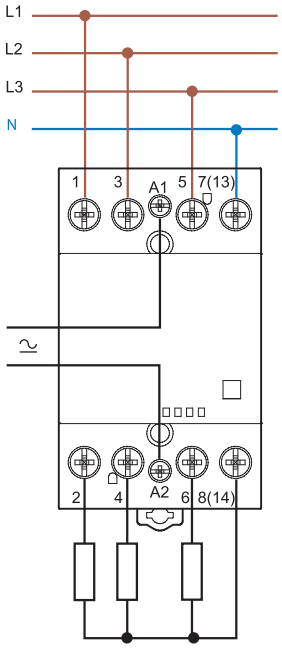

Type 22.44/22.64

Line only switched

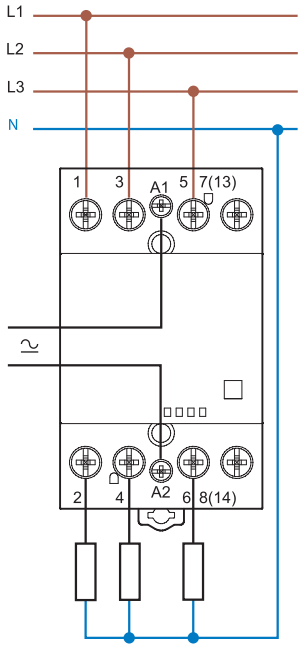

Type 22.44/22.64

L

Outline drawings

Type 22.32
Screw terminal

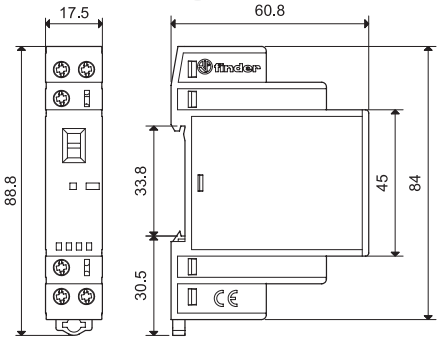

Types 22.32 + 022.33/022.35
Screw terminal

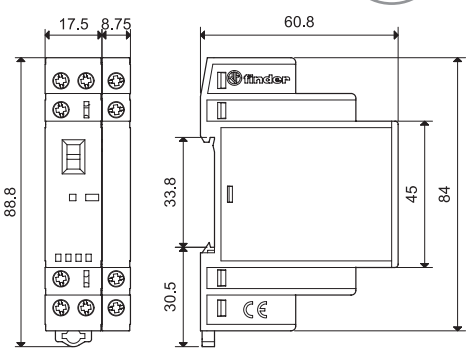

Type 22.34
Screw terminal

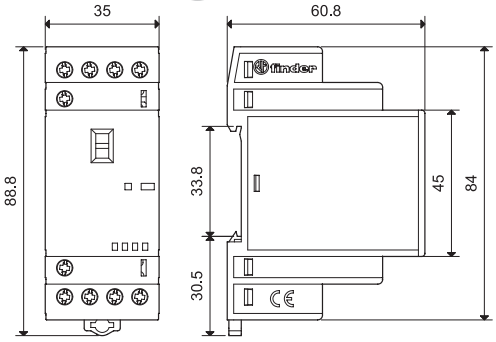

Types 22.34 + 022.33/022.35
Screw terminal

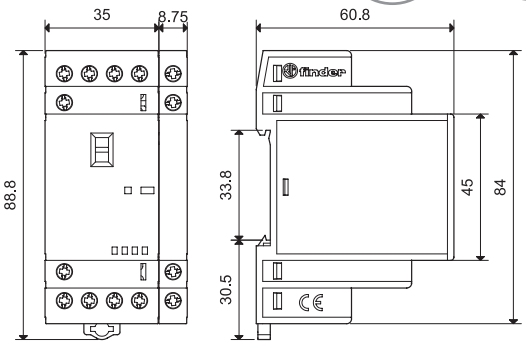

Types 22.44/22.64
Screw terminal

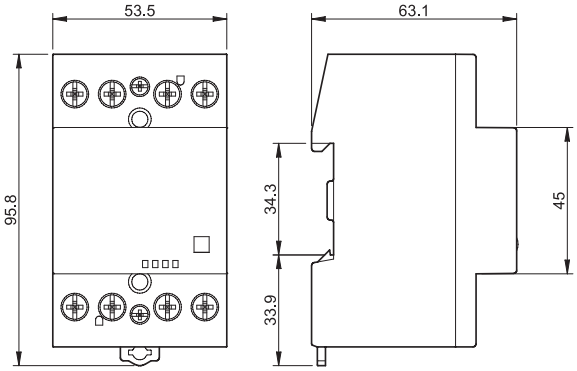

Types 22.44/22.64 + 022.63/022.65
Screw terminal

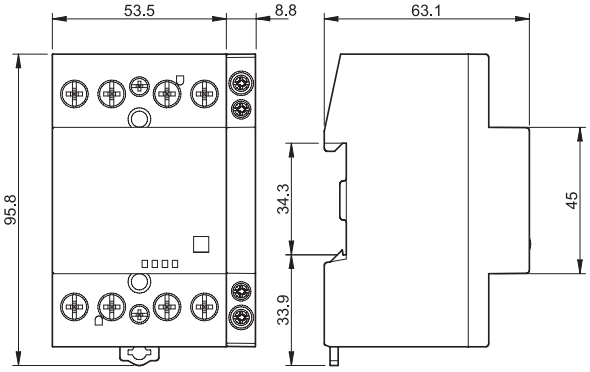

Types 022.33/022.35
Screw terminal

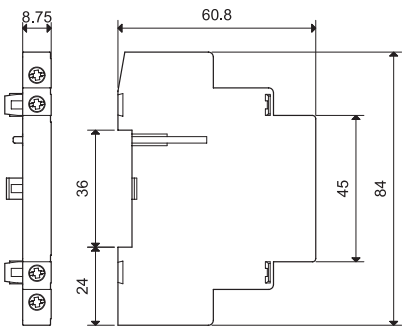

Types 022.63/022.65
Screw terminal

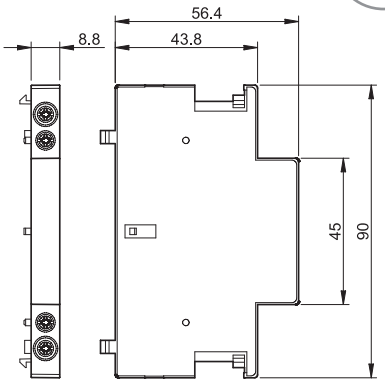

L

I-2019, www.findernet.com

Auxiliary modules

Mechanically linked contacts according to Annex L of EN 60947-5-1

		022.33	022.35	022.63	022.65
					
					
Type of contactor		Type 22.32 Type 22.34		Type 22.44 Type 22.64	
Contact specification					
Contact configuration		2 NO	1 NO + 1 NC	2 NO	1 NO + 1 NC
Conventional free air thermal current I_{th}	A	6		6	
Rated power AC15 (230 V)	VA	700		700	
Electrical life at rated load	cycles	$30 \cdot 10^3$		$30 \cdot 10^3$	
Minimum switching load	mW (V/mA)	1000 (10/10)		1000 (10/10)	
Contact material		AgNi		AgNi	
Short circuit protection					
Rated conditional short circuit current	kA	1		1	
Back-up fuse	A	6 (gL/gG type)		6 (gL/gG type)	
Terminals		**Solid and stranded cable**		**Solid and stranded cable**	
Max. wire size	mm^2	1 x 4 / 2 x 2.5		1 x 2.5	
	AWG	1 x 12 / 2 x 14		1 x 14	
Min. wire size	mm^2	1 x 0.2		1 x 1	
	AWG	1 x 24		1 x 18	
Screw torque	Nm	0.6		0.6	
Wire strip length	mm	9		9	
Power lost to the environment					
without contact current	W	—		—	
with rated current	W	0.5		0.5	
Approvals (according to type)		CE EAC RINA cULus		CE EAC cULus	

NOTE: It is not possible to assembly the auxiliary module on 22.32.0.xxx.x4x0 (2 NC versions).



22.32 + 022.33/022.35



22.44 + 022.63/022.65



22.34 + 022.33/022.35



22.64 + 022.63/022.65

L

Accessories



020.01

Adaptor for panel mounting (for 22.32 type), plastic, 17.5 mm wide — 020.01

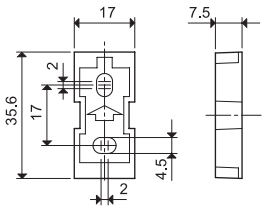



011.01

Adaptor for panel mounting (for 22.34 type), plastic, 35 mm wide — 011.01

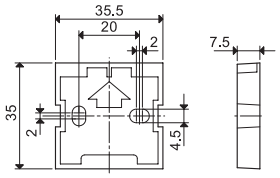

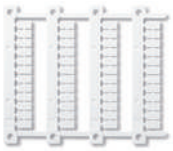

060.48

Sheet of marker tags (CEMBRE Thermal transfer printers) for all relays (48 tags), 6 x 12 mm — 060.48



019.01

Identification tag, plastic, 1 tag, 17x25.5 mm — 019.01



022.09

Separator for rail mounting, plastic, 9 mm wide — 022.09

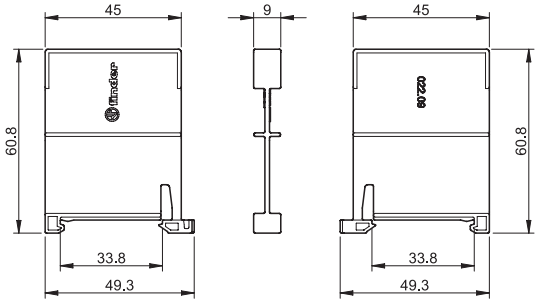

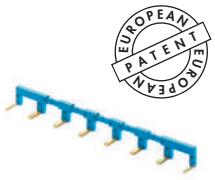

022.18

8-way jumper link for type 22.32, 17.5 mm wide — 022.18 (blue)

Rated values — 10 A - 250 V

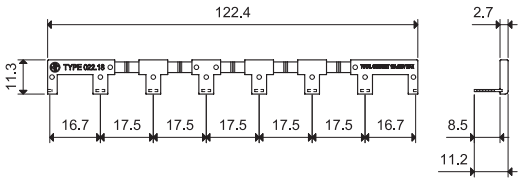



022.26

6-way jumper link for type 22.34, 35 mm wide — 022.26 (blue)

Rated values — 10 A - 250 V

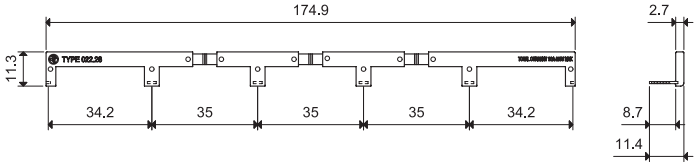

L

I-2019, www.findernet.com

Please see general technical information