OG5029

Diffuse reflection sensor

OGT-HPKG/US-100-DPS

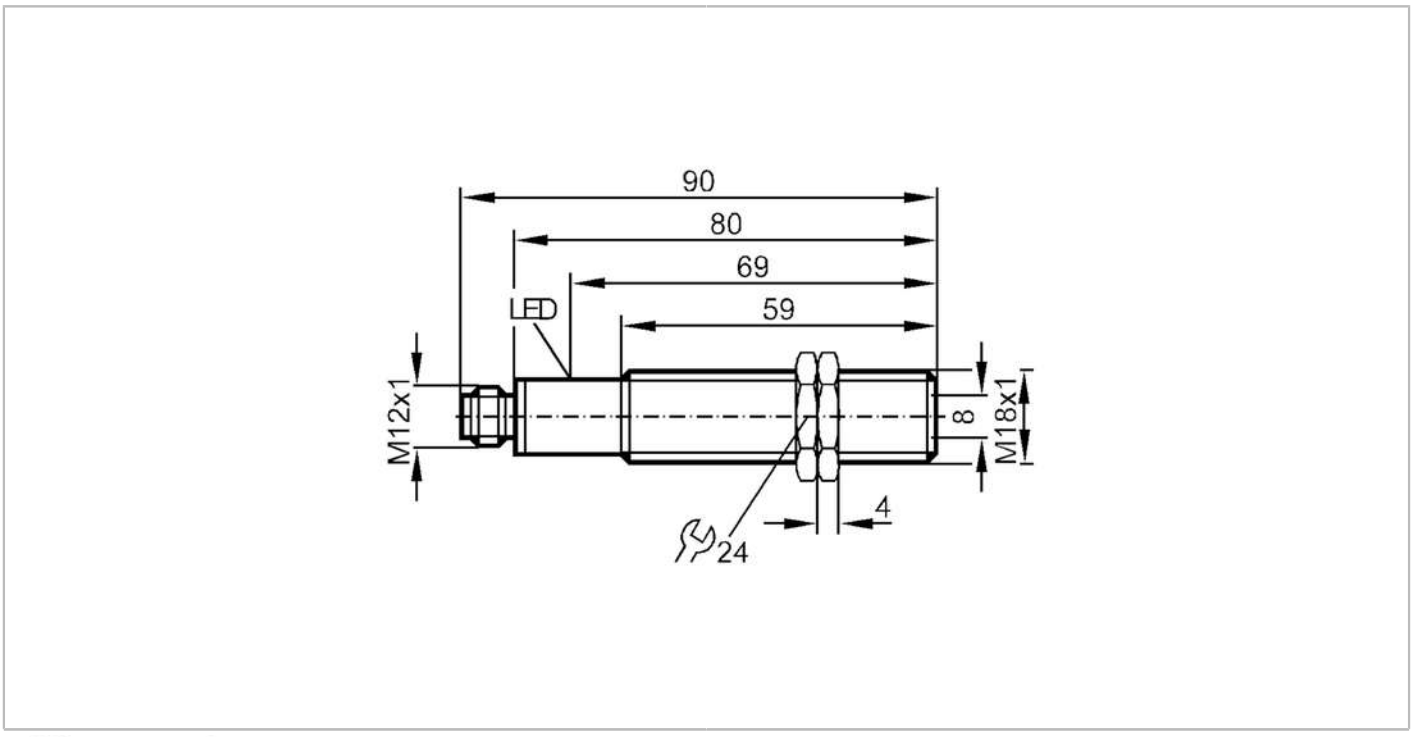

Product characteristics		
Type of light		infrared light
Housing		threaded type
Application		
Function principle		Diffuse reflection sensor
Electrical data		
Operating voltage	[V]	10...55 DC
Current consumption	[mA]	10; ((24 V))
Protection class		II
Reverse polarity protection		yes
Type of light		infrared light
Wave length	[nm]	880
Outputs		
Electrical design		PNP
Output function		light-on mode
Max. voltage drop switching output DC	[V]	2.5
Permanent current rating of switching output DC	[mA]	250
Switching frequency DC	[Hz]	160
Short-circuit protection		yes
Type of short-circuit protection		pulsed
Overload protection		yes

OG5029

Diffuse reflection sensor

OGT-HPKG/US-100-DPS

Detection zone			
Range	[mm]	< 100; (white paper 200 x 200 mm)	
Operating conditions			
Ambient temperature	[°C]	-25...80	
Protection		IP 65	
Tests / approvals			
EMC		EN 60947-5-2	
		EN 55011	class B
MTTF	[years]	826	
Mechanical data			
Weight	[g]	74.3	
Housing		threaded type	
Dimensions	[mm]	M18 x 1	
Thread designation		M18 x 1	
Materials		brass nickel-plated	
Lens material		glass	
Displays / operating elements			
Display		switching status	1 x LED, yellow
Accessories			
Items supplied		lock nuts: 2	
Remarks			
Pack quantity		1 pcs.	
Electrical connection			

Connector: 1 x M12; coding: A



Connection

