EVC506

Y connection cable

Multicable 2 x Y-Jumper M12 5M

Please see the technical note under "Downloads"

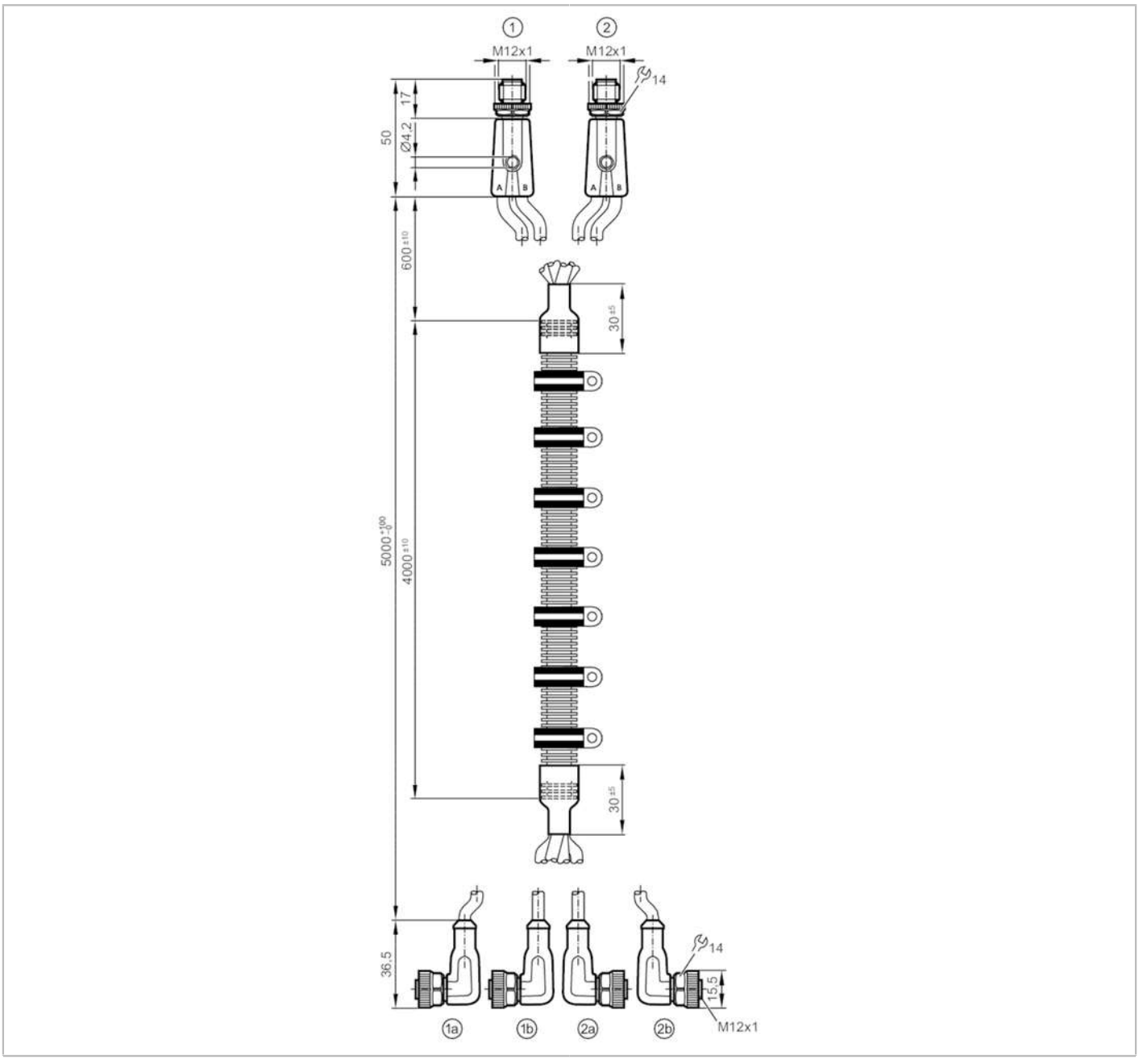

Application		
Special feature		Halogen-free
Electrical data		
Operating voltage	[V]	< 250 AC / < 300 DC
Protection class		II
Max. current load total	[A]	4
Operating conditions		
Ambient temperature	[°C]	-20...90

EVC506

Y connection cable

Multicable 2 x Y-Jumper M12 5M

Ambient temperature (moving)	[°C]	-20...90
Storage temperature	[°C]	-25...55
Storage humidity	[%]	10...100
Other climatic conditions for storage according to stated class		1K22/ DIN 60721-3-1
Protection		IP 67; IP 68; IP 69K
Mechanical data		
Weight	[g]	1022.5
Moulded-body material		TPU
Sealing material		FKM
Remarks		
Notes		Please see the technical note under "Downloads"
Pack quantity		1 pcs.

EVC506

Y connection cable

Multicable 2 x Y-Jumper M12 5M

Electrical connection

Cable: 5 m, PUR, Halogen-free, black, Ø 4.3 mm; 3 x 0.34 mm² (42 x Ø 0.1 mm)

Connection

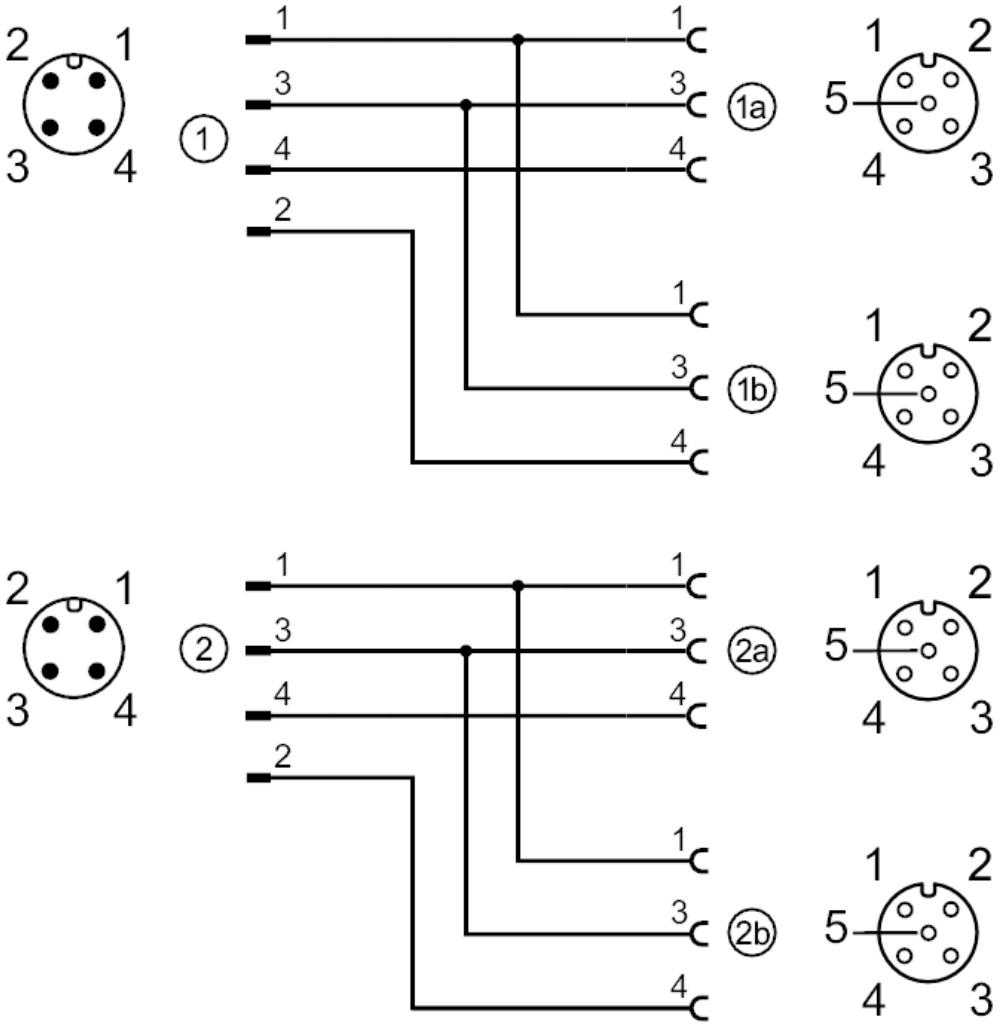

Electrical connection - plug

Connector: M12; Moulded body: TPU, orange

Electrical connection - socket

Connector: M12; Moulded body: TPU, orange; Sealing: FKM

EVC506

Y connection cable

Multicable 2 x Y-Jumper M12 5M

Diagrams and graphs

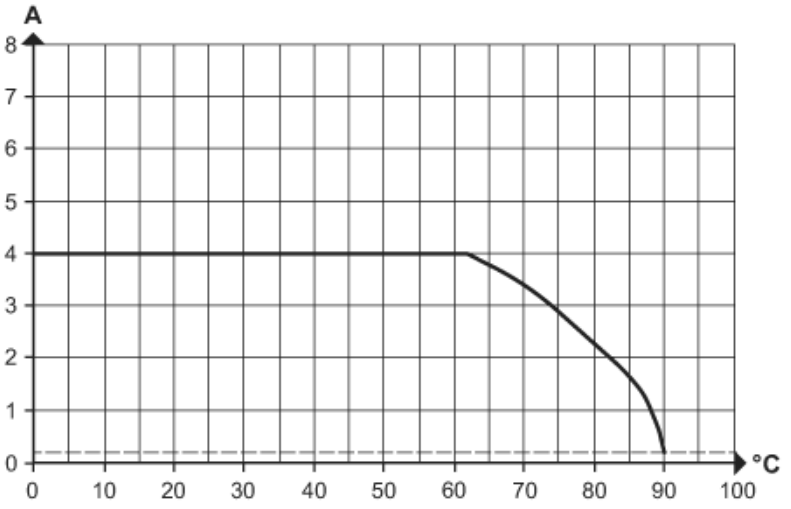

Derating Imax * 0.8 DIN EN 60512-5-2

X Ambient temperature [°C]

Y Current [A]