rotronic

Datenblatt - Fiche technique - Data sheet

11.02.8874



ROLINE USB 3.0 Kabel, A ST – Micro A ST, 2,0m

ROLINE USB 3.0 Câble, A M – Micro A M, 2.0m

ROLINE USB 3.0 Cable, USB Type A M – USB Type Micro A M, 2.0 m

DATE	REV.	REVISION	DRAFTING	CHECKED
2010.01.13	A/0	NEW	Zhucw	

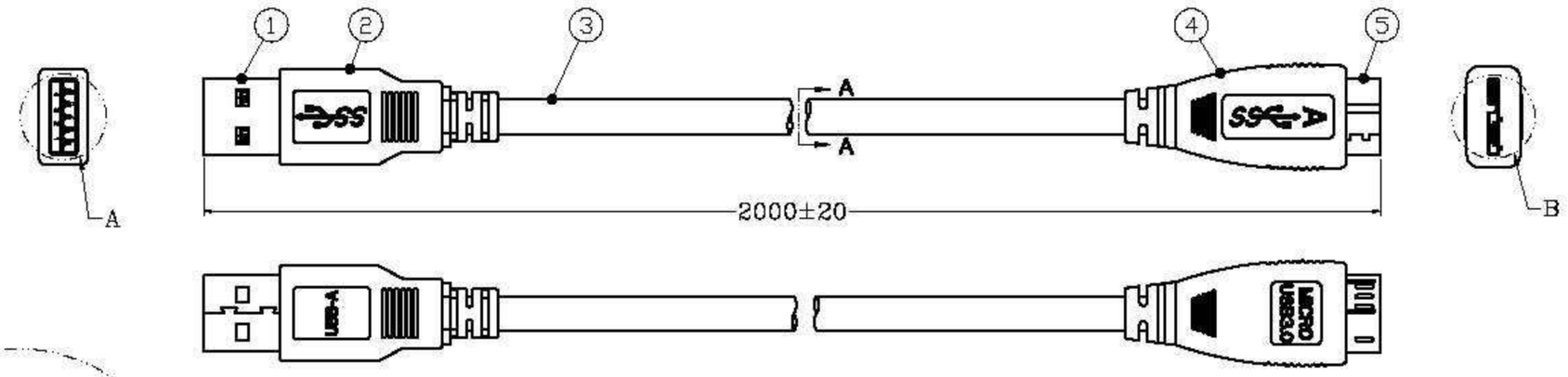

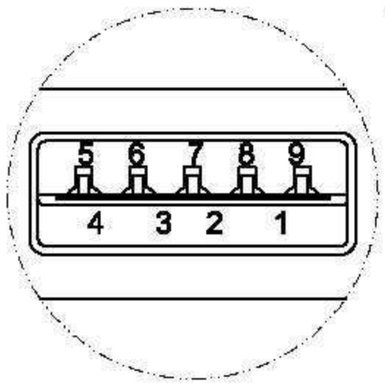

A
4:1

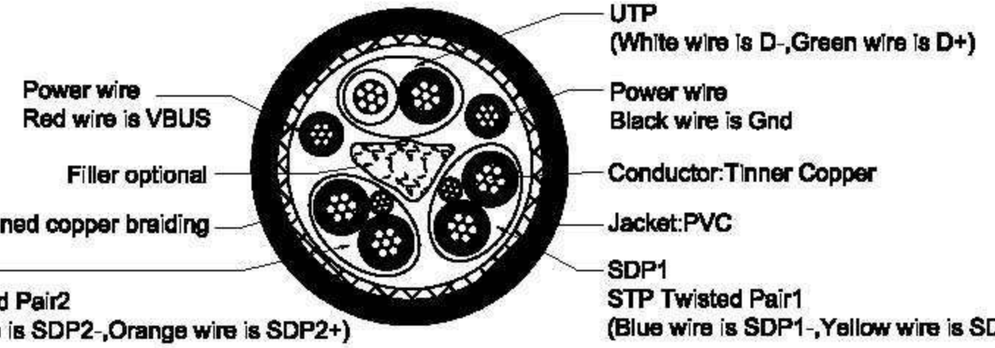

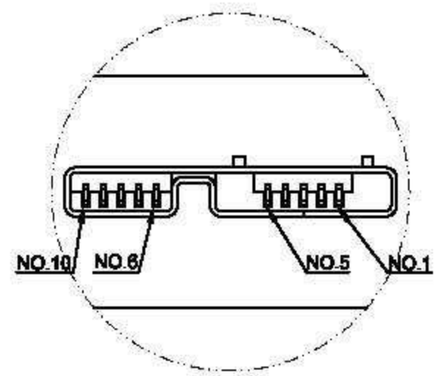

B
4:1

Standard A		Wire		Micro A	
Pin	Signal Name	Wire	Signal Name	Pin	Signal Name
1	VBUS	1	PWR	1	VBUS
2	D-	2	UTP D-	2	D-
3	D+	3	UTP D+	3	D+
4	GND	4	GND PWRrt	5	GND
5	SSRX-	5	SDP1-	6	SSTX-
6	SSRX+	6	SDP1+	7	SSTX+
7	GND_Drain	7、10	SDP1 Drain SDP2 Drain	8	GND_Drain
8	SSTX-	8	SDP2-	9	SSRX-
9	SSTX+	9	SDP2+	10	SSRX+
—	—	—	—	4	ID
Shell	Shield	Braid	Shield	Shell	Shield

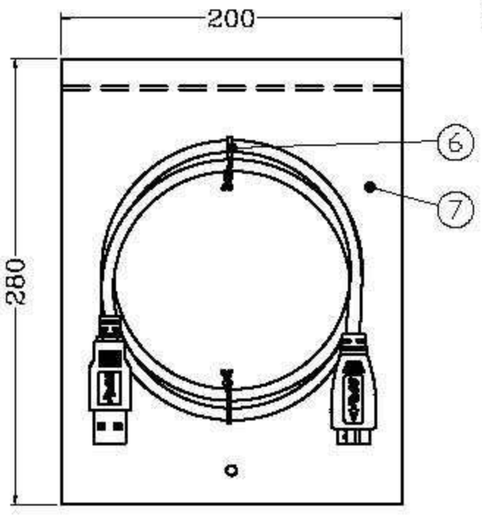

SECTION A-A

1	200x280x0.05mm	PE bag	7
2	Length:8cm Black	Cable Tie	6
1	Terminal:Phos/Brass,Gold plated 15u".	USB3.0 Micro A Male Plug	5
1	PVC: Black 60P	Molding_Micro A Male	4
1	USB 3.0 CABLE 3P*28AWG+2C*28AWG 2M	USB3.0 Cable 28AWG	3
1	PVC: Black 60P	Molding_A Male	2
1	Terminal:Phos/Brass,Gold plated 15u".	USB3.0 A Male Plug	1
Q'ty	SPECIFICATION	ITEM	NO

Unless specified on the drawing, tolerances are per the follows :
X. ±0.20
.X ±0.10
.XX ±0.05

Rotronic Co., Ltd

DRAW. NO		DESC.	USB3.0 A TYPE MALE TO MICRO USB3.0 A TYPE MALE		
DEPARTMENT	RD	DRAW	Zhucw	DATE	2010.01.13
SCALE	N/A	APPROVED	LANDER	DATE	2010.01.13
UNIT	mm	SHEET	1 OF 1		

Material		Part Number	11.02.8874	Note		3RD