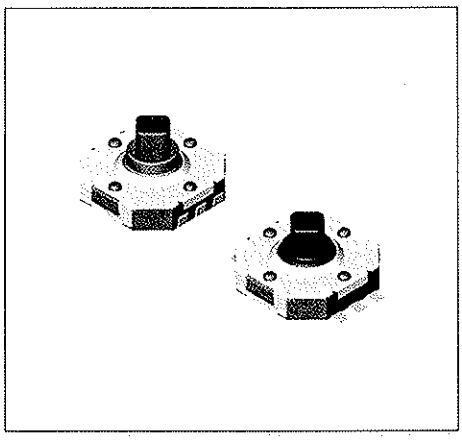

HOW TO ORDER

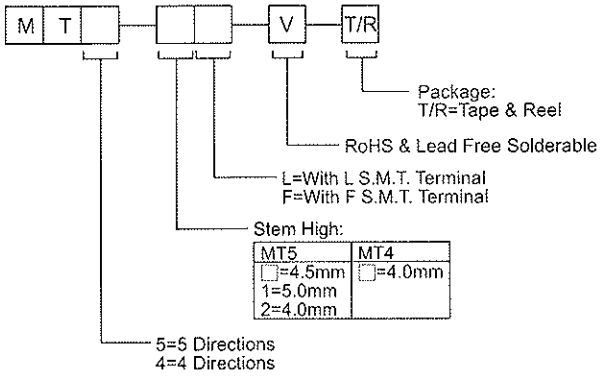

SPECIFICATION

MECHANICAL

Operation Force:
- 4-direction: 160gf
- Center push: 320gf

Stroke:
- 4-direction: 5°+2.5°/- 1.5°
- Center push: 0.25+0.1/- 0.2 mm

ENVIRONMENTAL

Operation Temperature Range : -25°C to +70°C
Storage Temperature Range : -40°C to +85°C

ELECTRICAL

Electrical Life: 100,000 cycles.
Rating: 50mA, 12VDC

PACKAGE

Tape & Reel : 850 pcs/reel

CIRCUIT

MT4

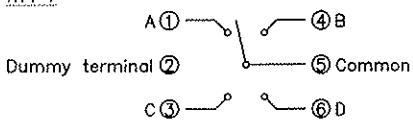

MT5

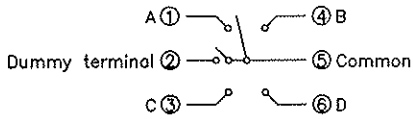

MT4-F

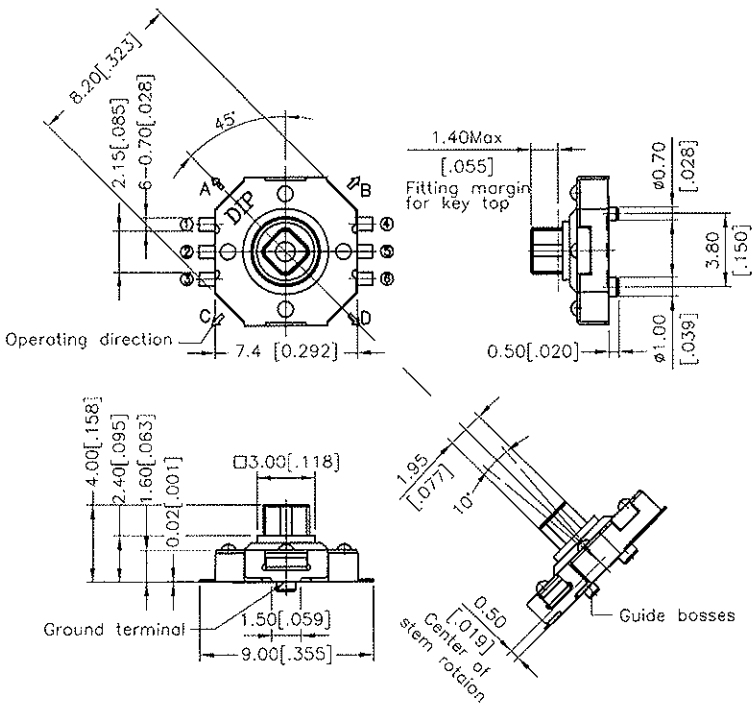

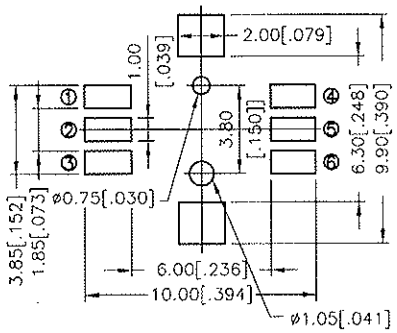

P.C.B. LAYOUT

General Tolerance: ±0.2mm(±0.008")