Bearing block CS7, Series CM1

1827001788

AVENTICS Bearing blocks



Technical data

Industry	Industrial
Version	With ball joint and foot
Standardization	VDMA 24562 part 2
Piston diameter	80 mm
Swivel bearing Ø	20 mm

Material

Housing material	Nodular graphite iron
Surface housing	galvanized
Part No.	1827001788

Dimensions

Bearing block CS7, Series CM1

1827001788

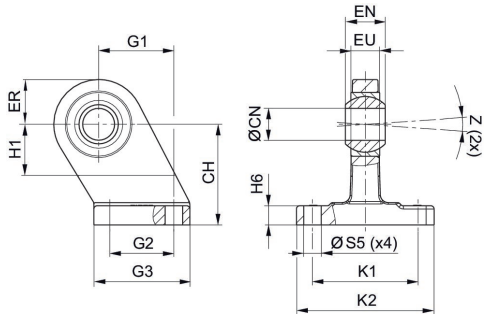

Piston Ø	Part No.	CH JS15	ØCN H7	EU max.	EN -1,0	ER max.	G1 JS14	G2 JS14	G3 max.
32	1827001784	32	10	10.5	14	16	21	18	31
40	1827001785	36	12	12	16	18	24	22	35
50	1827001786	45	16	15	21	21	33	30	45
63	1827001787	50	16	15	21	23	37	35	50
80	1827001788	63	20	18	25	28	47	40	60
100	1827001789	71	20	18	25	30	55	50	70
125	1827001790	90	30	25	37	40	70	60	90
160	1827001791	115	35	28	43	44	97	88	126
200	1827001792	135	35	28	43	47	105	90	130
250	1827001793	165	40	33	49	53	128	110	160
320	5239013442	200	50	45	60	63	150	122	186

Piston Ø	H1 min.	H6	K1 JS14	K2 max.	ØS5 H13	Z min.
32	16	9 ±1	38	51	6.6	4°
40	20	9 ±1	41	54	6.6	4°
50	22	11 ±1	50	65	9	4°
63	27	11 ±1	52	67	9	4°
80	31	12 ±1,5	66	86	11	4°
100	38	13 ±1,5	76	96	11	4°
125	40	17 ±1,5	94	124	14	4°
160	45	22 ±1,5	118	156	14	4°
200	45	27 ±2	122	162	18	4°
250	50	31 ±2	150	200	22	4°
320	60	36 ±2	170	234	26	4°