DATASHEET

SPRING LOADED SLOTTED CARRYING HANDLE 41305 ZI

PICTURE

DESCRIPTION:

Large hand space
Easy to carry thanks to the plastic sleeve
Spring loaded handle returns to its resting position, preventing damage during handling
Ideal for use on portable equipment cases
Flush fitting design reduces damage to handle and other equipment during transit
Manufactured from zinc plated steel
Maximum loading: 40 kg
Heat resistance: 100°C

FEATURES:

- Finish: Zinc Plated
- Material: Steel
- Dimensions: 137 x 108 mm
- Height: 108 mm
- Width: 137 mm

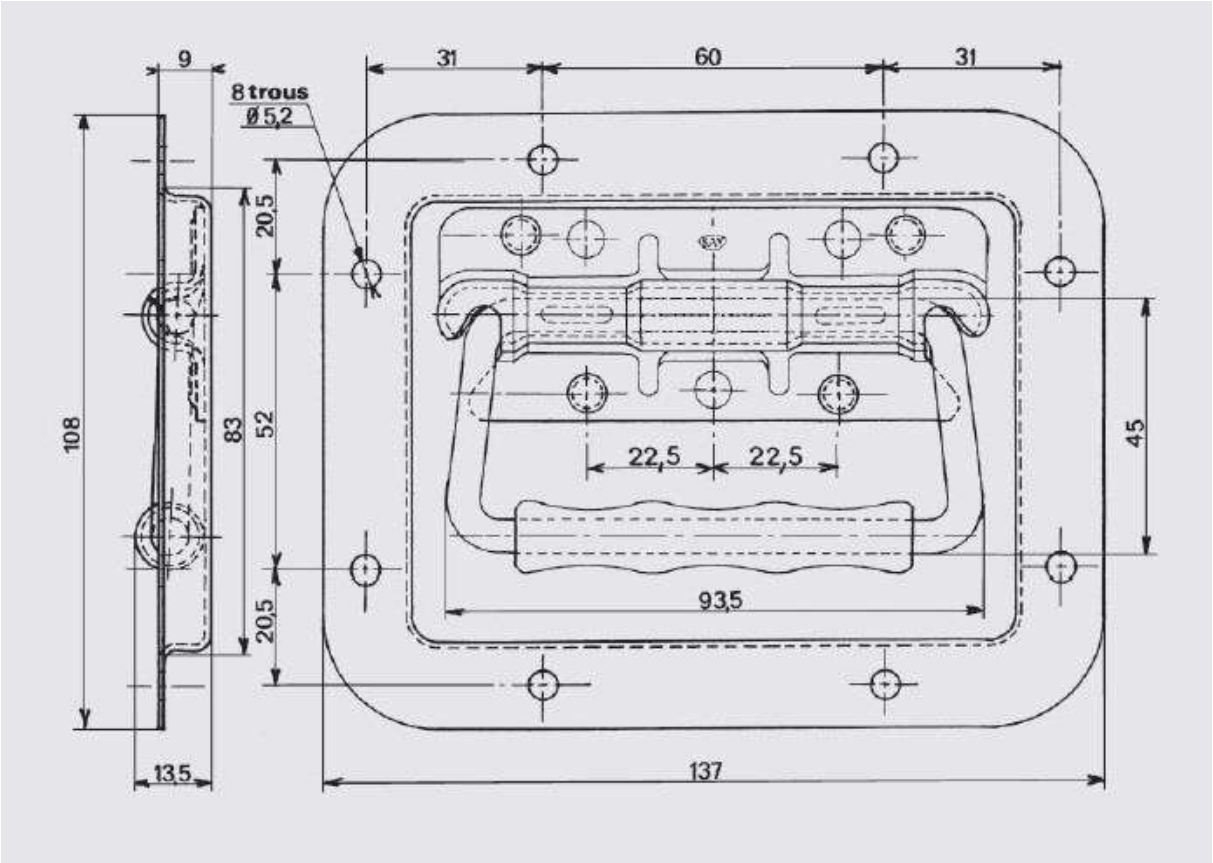
9
31
60
31
8 trous
Ø5,2
20,5
108
83
52
20,5
22,5
22,5
45
93,5
13,5
137