Deviating mirrors in stand for light grids
Orion Mirror Kxxx

Application:

- Perimeter protection

Features:

- For 2, 3 and 4 beams
- Robust extruded aluminum
- Sturdy steel base
- Spirit level for adjustment



Orion Mirror Kxxx are used to reflect the beams of a light grid when transmitter and receiver or active unit and passive unit are not in front of each other, e.g. perimeter protection. The mirrors are housed in an extruded aluminum column with a steel base.

Orion Mirror Kxxx are available in different lengths and can be used with Orion2 and Orion3 light grids.

Easy Installation

Orion Mirror Kxxx are supplied with pre-mounted mirrors. Each mirror can be adjusted independently. The base is made of two plates. Both their inclination and their angular position can be adjusted. A spirit level facilitates the adjustment. Equipped with springs, Orion Stand Plate can be used to absorb vibrations and compensate uneven floor surfaces. Orion Stand Plate is available as an accessory.

Deviating mirrors reduce the operating range

No more than three deviating mirrors should be used along the same optical path. Each mirror decreases the operating range. The operating range is decreased to:
- 85% of the nominal range with one mirror,
- 65% with two mirrors and
- 50% with three mirrors.

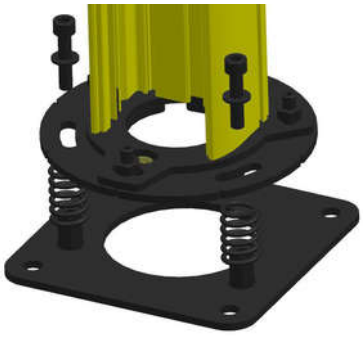

Orion Mirror Kxxx with Orion Stand Plate.

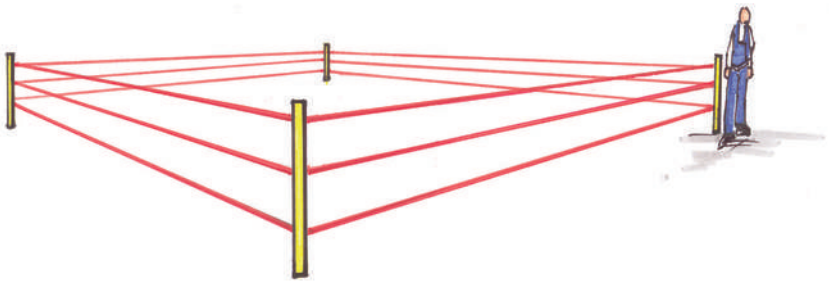

The number of deviations affects the operating distance.

Ordering information and dimensions

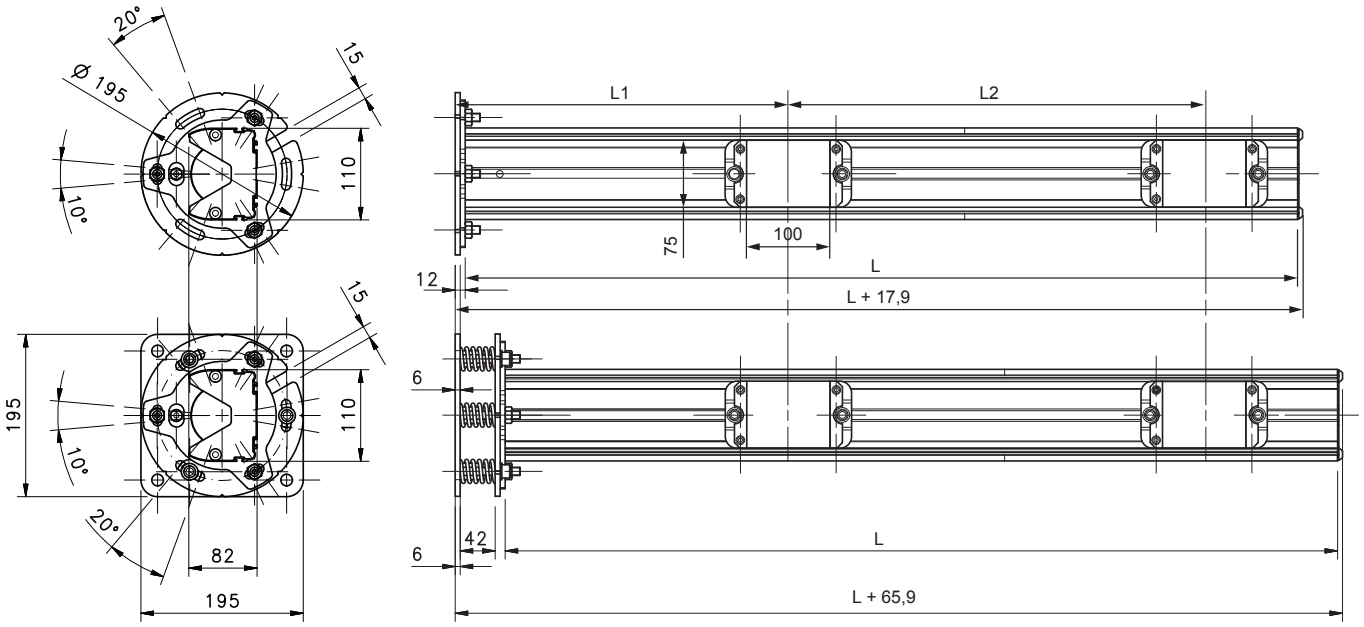

2TLC172060L0201

Example above - Orion Mirror K050

Article number	Model	Used with	Number of mirrors	L1* (mm)	L2** (mm)	L (mm)
2TLA022312R1000	Orion Mirror K050	Orion2-4-K2-050-B/E Orion3-4-K1C-050-B/E	2	400	500	1000
2TLA022312R1100	Orion Mirror K080	Orion2-4-K3-080-B/E Orion3-4-K2C-080-B/E	3	300	400	1200
2TLA022312R1200	Orion Mirror K090	Orion2-4-K4-090-B/E Orion3-4-K2C-090-B/E	4	300	300	1650
2TLA022312R1300	Orion Mirror K120	Orion2-4-K4-120-B/E Orion3-4-K2C-120-B/E	4	300	400	1650

* L1: distance from the base to the center of the lowest mirror
** L2: distance between the center of the mirrors

Article number	Model	Description
2TLA022312R5000	Orion Stand Plate	Kit for adjustment of Stand

ABB AB
Jokab Safety
Varlabergsvägen 11
SE-434 39 Kungsbacka
Tel. +46 (0) 21-32 50 00

www.abb.com/jokabsafety

Power and productivity
for a better world™