Operating instructions

Solenoid Metering Pump
Concept L, CPLa

EN



Target group: at least "instructed personnel" unless otherwise required.

Please carefully read these operating instructions before use. · Do not discard.
The operator shall be liable for any damage caused by installation or operating errors.
The latest version of the operating instructions are available on our homepage.

Part no. 981248 **Original operating instructions (2006/42/EC)** Version: BA CO 016 03/22 EN

Supplementary information



Fig. 1: Please read!

Read the following supplementary information in its entirety! You will benefit more from the operating instructions should you already know this information.

The following are highlighted separately in the document:

- Enumerated lists

→ Instructions

⇨ Outcome of the instructions

↳ *'State the identity code and serial number' on page 2*: Links to points in this chapter

- refer to ... : References to points in this document or another document

[Keys]

Information

This provides important information relating to the correct operation of the unit or is intended to make your work easier.

Safety information

Safety information is identified by pictograms - see "Safety" chapter.

Validity

These operating instructions conform to current EU regulations applicable at the time of publication.

State the identity code and serial number

Please state the identity code and serial number, which you can find on the nameplate, when you contact us or order spare parts. This enables us to clearly identify the unit type and material versions.

General non-discriminatory approach

In order to make it easier to read, this document uses the male form in grammatical structures but with an implied neutral sense. It is aimed equally at both men and women. We kindly ask female readers for their understanding in this simplification of the text.

Table of contents

1 About this pump 5

2 Identity code 6

3 Safety chapter 8

3.1 Intended use 8

3.2 Safety information 9

3.3 Information in the event of an emergency 10

3.4 Qualification of personnel 11

3.5 Sound pressure level 11

4 Overview of equipment and control elements 12

4.1 Overview of equipment 12

4.1.1 Control elements 13

5 Functional description 16

5.1 Liquid End 16

5.2 Drive Unit 16

5.3 Capacity 16

5.4 Functional description of control 16

5.4.1 Operating modes, functions, options 16

5.4.2 Function and fault indicator 17

5.4.3 Hierarchy of operating modes, functions and fault statuses 18

6 Assembly 19

7 Installation, hydraulic 20

7.1 Installing hose lines 20

7.1.1 Installation of metering pumps without bleed valve 20

7.1.2 Installation of metering pumps with bleed valve 25

7.2 Basic installation notes 25

8 Installation, electrical 27

8.1 Supply voltage connector - power supply 28

8.2 Supply voltage connector - low voltage 28

8.3 Description of the terminals 29

8.3.1 "External control" terminal 29

8.3.2 "Level switch" terminal 30

8.3.3 "Metering monitor" terminal 31

8.3.4 Relay 32

9 Set 35

9.1 Basic principles of pump set-up 35

9.2 Checking adjustable variables 36

9.3 Changing to Setting mode 36

9.4 Selecting the operating mode (MODE menu) 37

9.5 Operating mode settings (SET menu) 38

9.5.1 "Manual" operating mode settings 38

9.5.2 "Analog" operating mode settings (ANALG menu) 38

9.5.3 "Contact" operating mode settings (CNTCT menu) 41

9.5.4 "Batch" operating mode settings (BATCH menu) 43

9.6 Programmable function settings (SET menu) 43

9.6.1 “Calibrate” function settings (CALIB menu) 44

9.6.2 “Pressure stages” function settings (PRESS menu) 45

9.6.3 “Auxiliary frequency” function settings (AUX menu) 46

9.6.4 “Flow” function settings (FLOW menu) 46

9.7 Setting the code (CODE menu) 46

9.8 Checking the software version (SWVER menu) 46

9.9 Deleting the total number of strokes or total litres (CLEAR window) 47

10 Operation ... **48**
10.1 Manual operation ... 48
10.2 Remote operation ... 49
11 Maintenance ... **50**
12 Repair ... **52**
12.1 Cleaning valves ... 52
12.2 Replacing the diaphragm ... 54
12.2.1 Liquid end types with the exception of 0220 , 0232 and 0420 ... 54
12.2.2 Liquid end types 0220 , 0232 and 0420 ... 56
13 Troubleshooting ... **58**
13.1 Faults without error message ... 58
13.2 Faults with error message ... 58
13.2.1 Fault messages ... 58
13.2.2 Warning messages ... 59
13.3 All other faults ... 59
14 Decommissioning and disposal ... **60**
14.1 Decommissioning ... 60
14.2 Disposal ... 61
15 Technical data ... **62**
15.1 Performance data ... 62
15.2 Precision ... 63
15.2.1 Standard liquid end ... 63
15.3 Viscosity ... 63
15.4 Material specifications ... 63
15.5 Electrical data ... 63
15.6 Temperatures ... 64
15.7 Climate ... 65
15.8 Altitude of site ... 65
15.9 Degree of Protection and Safety Requirements ... 65
15.10 Compatibility ... 65
15.11 Shipping weight ... 66
15.12 Sound pressure level ... 66
16 Dimensional drawings ... **67**
17 Exploded views of liquid ends ... **70**
18 Ordering information ... **86**
19 Diagrams for adjusting the capacity - CPLa ... **88**
20 Declaration of Conformity ... **91**
21 Operating / set-up overview ... **92**
22 Continuous displays ... **94**
23 Index ... **95**

1 About this pump

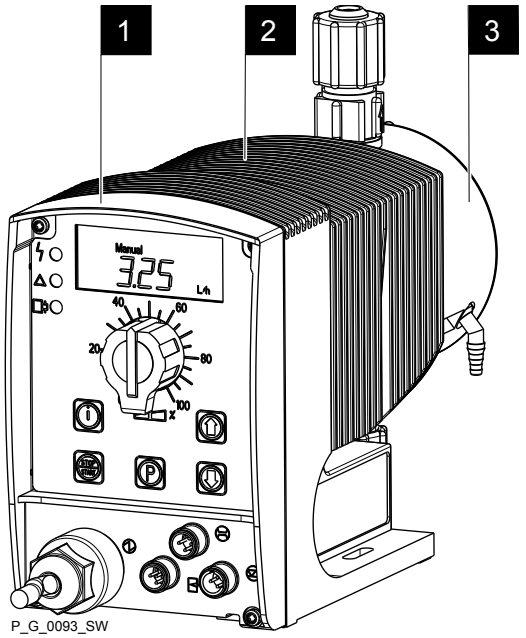

Fig. 2: Overview of equipment, complete

1 Control unit
2 Drive unit
3 Liquid end

Pumps in the ProMinent Concept L product range are microprocessor-controlled solenoid metering pumps with the following features:

- The dosing rate can be displayed in l/h or gal/h respectively (in a calibrated state) or in strokes/min.
- The stroke length is infinitely adjustable and is shown on the LCD display (when "Calibration function" = 1).
- The stroke rate can be set digitally precisely and is shown on the LCD display.
- The nominal pressure can be adapted to a system by pressure stages.
- Two pumps can be controlled differently by the same standard signal.
- Illuminated LCD display.

2 Identity code



Product identification

This identity code serves to identify the product.

Use the identity code from the Product Catalogue for orders.

Product range Concept L												
CPLa	Type											
	- - - -	Performance data and type - see nameplate										
		Dosing head material										
		PP	Polypropylene									
		NP	Clear acrylic									
		PV	PVDF									
		SS	Stainless steel									
			Seal material									
			T	Standard diaphragm with PTFE seal								
			E	Standard diaphragm with EPDM seal								
			B	Standard diaphragm with FPM seal								
			M	Full diaphragm with PTFE seal								
				Dosing head version								
				0	without bleed valve, without valve spring							
				1	without bleed valve, with valve spring							
				2	with bleed valve, without valve spring							
				3	with bleed valve, with valve spring							
				7	self-bleeding with groove (SER)							
					Hydraulic connector							
					0	Standard connector in line with technical data						
					4	Connector for 12x6 hose						
					9	Connector for 10x4 hose						
						Calibration function						
						0	without stroke length sensor					
						1	with stroke length sensor					
							Design					
							2	Housing RAL5003 / Hood RAL5003				
							M	modified				
								Logo				
								0	without ProMinent logo			
									Electrical connection			
									U	100 ... 230 V ± 10 %, 50/60 Hz		
									M	12 ... 24 V, DC		

Product range Concept L																
										Cable and plug						
										A	2 m European					
										B	2 m Swiss					
										C	2 m Australian					
										D	2 m USA / 115 V					
										1	2 m European, open end					
										..	...					
											Relay, pre-set to ...					
											0	no relay	-			
											1	1 x changeover contact 230 V – 6 A	Fault indicating relay (N/C)			
											3	1 x changeover contact 230 V – 6 A	Fault indicating relay (N/O)			
											4	1 x N/O 24 V – 1 A 1 x N/O 24 V – 100 mA	as 1 + pacing relay			
											5	1 x N/O 24 V – 1 A 1 x N/O 24 V – 100 mA	as 3 + pacing relay			
											C	1 x 4-20 mA output 1 x N/O 24 V – 100 mA	As 1 + 4-20 mA output			
											D	1 x 4-20 mA output 1 x N/O 24 V – 100 mA	As 3 + 4-20 mA output			
												Accessories				
												0	no accessories			
												1	with foot and injection valve, 2 m suction line, 5 m metering line			
												4	Multifunctional valve and accessories			
													Control version			
													0	Manual + External contact 1:1		
													1	Manual + Pulse Control		
													2	Manual + Pulse Control + Analogue 0/4-20 mA		
														Access code		
														0	no access code	
														1	with access code	

3 Safety chapter

Identification of safety notes

The following signal words are used in these operating instructions to denote different severities of danger:

Signal word	Meaning
WARNING	Denotes a possibly dangerous situation. If this is disregarded, you are in a life-threatening situation and this can result in serious injuries.
CAUTION	Denotes a possibly dangerous situation. If this is disregarded, it could result in slight or minor injuries or material damage.

Warning signs denoting different types of danger

The following warning signs are used in these operating instructions to denote different types of danger:

Warning signs	Type of danger
	Warning – automatic start-up.
	Warning – high-voltage.
	Warning – danger zone.

3.1 Intended use

NOTICE!

Wear caused by "Pump ON/OFF" using the mains connection

Frequent switching of the pump on and off (>2 times each day) using the supply voltage leads to increased wear in the pump. The pump is not technically designed for this.

If necessary, use the "Pause" function to switch the pump to standby mode. Do not switch the pump on and off using the supply voltage to spare a pause input.

- Only use the pump to meter liquid feed chemicals.
- Only use the pump once it has been correctly installed and started up in accordance with the technical data and specifications contained in the operating instructions.
- Observe the general limitations with regard to viscosity limits, chemical resistance and density - see also the ProMinent Resistance List in the Product Catalogue or at www.prominent.com.
- All other uses or modifications are prohibited.
- The pump is not designed to meter gaseous media and solids.
- The pump is not designed to meter flammable media.
- The pump is not designed to meter explosive media.

- The pump is not intended for operation in areas at risk from explosion.
- The pump is not designed for use outdoors without appropriate protective measures.
- Only allow the pump to be operated by trained and authorised personnel, see the following "Qualifications" table.
- You have a duty to observe the information contained in the operating instructions during the different phases of the unit's service life.

3.2 Safety information



WARNING!

Warning about personal and material damage

The pump can start to pump, as soon as it is connected to the mains voltage.

– Install an emergency cut-off switch in the pump power supply line or integrate the pump in the emergency cut-off management of the system.



WARNING!

Danger of electric shock

Supply voltage may be present inside the pump housing.

– Safely and quickly disconnect the pump from the mains/power supply if the pump housing has been damaged.
  Only return the pump to operation after an authorised repair.



WARNING!

Warning of hazardous feed chemical

Should a dangerous feed chemical be used: it may escape from the hydraulic components when working on the pump, material failure or incorrect handling of the pump.

– Take appropriate protective measures before working on the pump (e.g. safety glasses, safety gloves, ...). Adhere to the material safety data sheet for the feed chemical.
– Drain and flush the liquid end before working on the pump.



WARNING!

Danger from hazardous substances!

Possible consequence: Fatal or very serious injuries.

Please ensure when handling hazardous substances that you have read the latest safety data sheets provided by the manufacture of the hazardous substance. The actions required are described in the safety data sheet. Check the safety data sheet regularly and replace, if necessary, as the hazard potential of a substance can be re-evaluated at any time based on new findings.

The system operator is responsible for ensuring that these safety data sheets are available and that they are kept up to date, as well as for producing an associated hazard assessment for the workstations affected.



CAUTION!

Warning of feed chemical spraying around

Feed chemical may spray out of the hydraulic components if they are tampered with or opened due to pressure in the liquid end and adjacent parts of the system.

– Disconnect the pump from the mains power supply and ensure that it cannot be switched on again by unauthorised persons.
– Ensure that the system is at atmospheric pressure before commencing any work on hydraulic parts of the system.

Warning of feed chemical spraying around

- The metering pump may generate a multiple of its nominal pressure. Hydraulic parts may rupture if a pressure line is blocked.
- Install a relief valve in the pressure line downstream of the metering pump.



CAUTION!

Warning of feed chemical spraying around

An unsuitable feed chemical can damage the parts of the pump that come into contact with the chemical.

– Take into account the resistance of the wetted materials and the ProMinent Resistance List when selecting the feed chemical - see the ProMinent Product Catalogue or visit ProMinent.



CAUTION!

Danger from incorrect metering

Should a different liquid end size be fitted, this will change the metering behaviour of the pump.

– Have the pump reprogrammed in the works.

Fixed separating protective equipment

- Dosing head
- Housing
- Hood (houses the control elements)

The dosing head may only be removed by the customer in accordance with the "Repair" chapter.

The housing and the hood may only be removed by ProMinent customer service department.

3.3 Information in the event of an emergency

In an emergency, either disconnect the mains plug or press the Emergency Stop switch, installed by the customer, or disconnect the pump safely and as quickly as possible from the mains/power supply in line with the Emergency Management guidelines for your system.

If feed chemical escapes, ensure as safely and as quickly as possible that the hydraulic environment around the pump is at atmospheric pressure as well. Pay attention to the material safety data sheet for the feed chemical.

3.4 Qualification of personnel

Qualification of personnel

Task	Qualification
Storage, transport, unpacking	Instructed person
Assembly	Technical personnel, service
Planning the hydraulic installation	Qualified personnel who have a thorough knowledge of metering pumps
Hydraulic installation	Technical personnel, service
Installation, electrical	Electrical technician
Operation	Instructed person
Maintenance, repair	Technical personnel, service
Decommissioning, disposal	Technical personnel, service
Troubleshooting	Technical personnel, electrical technician, instructed person, service

Explanation of the table:

Qualified personnel

A qualified employee is deemed to be a person who is able to assess the tasks assigned to him and recognise possible dangers based on his/her technical training, knowledge and experience, as well as knowledge of pertinent regulations.

Note:

A qualification of equal validity to a technical qualification can also be gained by several years of employment in the relevant field of work.

Electrical technician

An electrical technician is able to complete work on electrical systems and recognise and avoid possible dangers independently based on his/her technical training and experience, as well as knowledge of pertinent standards and regulations.

The electrical technician should be specifically trained for the working environment in which he is employed and know the relevant standards and regulations.

An electrical technician must comply with the provisions of the applicable statutory directives on accident prevention.

Instructed person

An instructed person is deemed to be a person who has been instructed and, if required, trained in the tasks assigned to him/her and possible dangers that could result from improper behaviour, as well as having been instructed in the required protective equipment and protective measures.

Service

The Service department refers to service technicians, who have received proven training and have been authorised by ProMinent to work on the system.

3.5 Sound pressure level

Sound pressure level

Sound pressure level LpA < 70 dB according to EN ISO 20361

at maximum stroke length, maximum stroke rate, maximum back pressure (water)

4 Overview of equipment and control elements

4.1 Overview of equipment

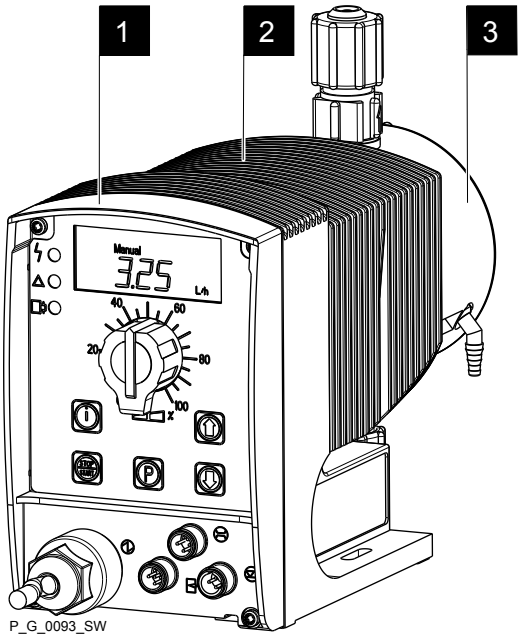

Fig. 3: Overview of equipment, complete

1 Control unit
2 Drive unit
3 Liquid end

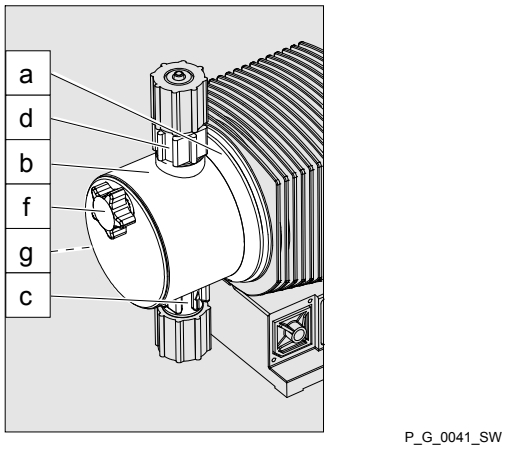

Fig. 4: Liquid end with bleed valve

a Backplate
b Dosing head
c Suction valve
d Discharge valve
f Bleed valve
g Bypass hose sleeve, concealed

4.1.1 Control elements

Control elements, overview

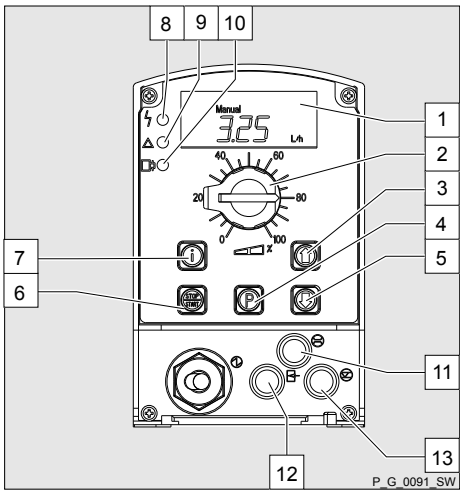

Fig. 5

1 LCD screen (view for “Calibration function” = 1)
2 Stroke length adjustment knob
3 *[UP]* key
4 *[P]* key
5 *[DOWN]* key
6 *[STOP/START]* key
7 i *[key]*
8 Fault indicator (red)
9 Warning indicator (yellow)
10 Operating indicator (green)
11 "Metering monitor" terminal
12 "External control" terminal
13 "Level switch" terminal

4.1.1.1 Key functions

Key	Application	In continuous displays (operation)	In Setting mode (set up)
			
[STOP/ START]	Pressed briefly	Stop pump,	Stop pump,
		Start pump	Start pump
			
[P]	Pressed briefly	Start batch (only in *‘Batch’* operating mode), acknowledge fault	Confirm input - jump to next menu option or to continuous display
	Pressed for 2 s	Change to Setting mode	-
	Pressed for 3 s	-	Jump to continuous display
 B0098			
[i]	Pressed 1x	Switch between the continuous displays	Change between "Change individual digits" and "Change one number"
	Pressed 2x	-	Under "Change individual digits": Jump to the first digit

Key	Application	In continuous displays (operation)	In Setting mode (set up)
			
[UP], *[DOWN]*	Individually pressed (until *'Set'* identifier appears)	Change directly adjustable variables	Select another setting, change individual digit or number
	Pressed simultaneously	Priming (in "Stroke rate" continuous display)	-

4.1.1.2 Stroke length adjustment knob

The stroke length can be adjusted using the stroke length adjustment knob and with it the volume per stroke.

4.1.1.2.1 Control elements

Familiarise yourself with the pump control elements using the "Control elements and key functions" overview!

Identifier

The LCD screen supports the operation and set-up of the pump using different identifiers:

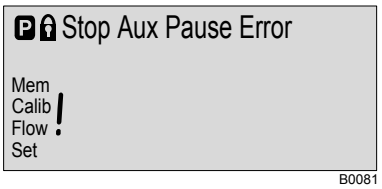

Fig. 6

Tab. 1: The identifiers have the following meanings:

Identifier	Meaning
	The pump is in Setting mode.
	In a continuous display: Security lock (if a code was set).
	In Setting mode: Indicates entry into the *'CODE'* menu.
'Stop'	The pump was stopped using the *[STOP/START]* key.
'Aux'	The pump is currently pumping with the auxiliary frequency as the stroke rate. In the *'AUX'* menu: The pump is in the *'AUX'* menu.
'Pause'	The pump was externally stopped by the "Pause" function (externally).
'Error'	The pump has detected an error.
'Mem'	In "Contact" and "Batch" operating modes: The auxiliary function "Memory" has been set.
	In the *'CNTCT'* or *'BATCH'* menu (identifier *'Mem'* flashes): The auxiliary function "Memory" can be set.
with "Calibration function" = 1: *'Calib'*	The pump is in the *'CALIB'* menu.

Identifier	Meaning
	In the continuous display (identifier *'Calib'* flashes): Deviations of the stroke length from the value at the time of calibration by more than 10 scale divisions – e.g. with a stroke length of 40%, if this is set at less than 30% or at greater than 50%.
'Flow'	The pump is in the *'FLOW'* menu.
'Set'	The pump is in the *'SET'* menu.
!	The number of strokes achieved is higher than the maximum figures of 99999 that can be displayed on the LCD screen.



With "Calibration function" = 1: The pump only shows the metering volume and the capacity in the calibrated status in l or l/h or in gal or gal/h.

5 Functional description

5.1 Liquid End

The dosing process is performed as follows: The diaphragm is pressed into the dosing head; the pressure in the dosing head closes the suction valve and the feed chemical flows through the discharge valve out of the dosing head. The diaphragm is now drawn out of the dosing head; the discharge valve closes due to the negative pressure in the dosing head and fresh feed chemical flows through the suction valve into the dosing head. One cycle is completed.

5.2 Drive Unit

The diaphragm is driven by an electromagnet, which is controlled by an electronic controller.

5.3 Capacity

The capacity is determined by the stroke length and the stroke rate. The stroke length can be adjusted between 0 and 100 % using the stroke length adjustment knob. A metering volume of between 30 to 100 % is reproduced as being technically sensible! The stroke rate can be set using the arrow keys (not in "Analog" operating mode) within a range of 0 - 180 strokes/min.

5.4 Functional description of control

5.4.1 Operating modes, functions, options

Operating modes

The operating modes are selected via the *'MODE'* menu (depending on the identity code, some operating modes may not be available).

'Analog' **operating mode:** (Identity code, control version: analog). The stroke rate is controlled using an analogue current signal via the "External control" terminal. Processing of the current signal can be preselected using the control unit.

'Manual' **operating mode:** The stroke rate is set manually on the control unit. 100 % corresponds to 180 strokes/min.

'Contact' **operating mode:** This operating mode provides the option of making fine adjustments using small scaling or transfer factors. Metering can be triggered either by a pulse received via the "External control" terminal or through a contact or a semiconductor switching element. A metering quantity (batch) or a number of strokes (scaling or transfer factor 0.01 to 99.99) can be pre-selected via the control unit using the "Pulse Control" option.

'Batch' **operating mode:** This operating mode provides the option of working with large transfer factors (up to 65535). Metering can be triggered either by pressing the *[P]* key or by a pulse received via the "External control" terminal or through a contact or a semiconductor switching element. It is possible to pre-select a metering quantity (batch) or a number of strokes via the control unit.

Functions

The following functions can be selected using the SET menu:

"Calibrate" function: (Identity code, stroke length adjustment: Manual + Calibration): The pump can also be operated in a calibrated state in all operating modes. In this case, the corresponding continuous displays can then indicate the metering volume or the capacity directly. Calibration is maintained within a stroke rate range of 0 - 180 strokes/min. Calibration is also maintained when the stroke length is altered by up to ±10% scale divisions.

"Auxiliary frequency" function: Enables a freely selectable and programmable stroke rate to be switched on in the *'SET'* menu, which can be controlled via the "External control" terminal. This auxiliary frequency has priority over the operating mode stroke rate settings.

"Flow" function: Stops the pump when the flow is insufficient, provided a metering monitor is connected. The number of defective strokes, after which the pump is switched off, can be set in the *'SET'* menu.

The following functions are available as standard:

"Level switch" function: Information about the liquid level in the dosing tank is reported to the pump control. To do this, a two-stage level switch must be fitted, which is connected to the "Level switch" terminal.

"Pause" function: The pump can be remotely stopped via the "External control" terminal. The "Pause" function only works via the "External control" terminal.

The following functions are triggered by pressing a key:

"Stop" function: The pump can be stopped without disconnecting it from the mains/power supply by pressing the *[STOP/START]* key.

"Priming" function: Priming (short-term transport at maximum frequency) can be triggered by simultaneous pressing of the two arrow keys in the "Stroke rate" continuous display.

Relay option

The pump has two connecting options:

"Fault indicating relay" or "Output relay" option: In the event of fault signals, warning signals or tripped level switches, the relay connects to complete an electric circuit (for alarm horns etc.). The relay can be retrofitted via a knock-out in the drive unit.

"Fault indicating and pacing relay" option: In addition to the fault indicating relay, the pacing relay can be used to make a contact every stroke. The relay can be retrofitted via a knock-out in the drive unit.

5.4.2 Function and fault indicator

The operating and fault statuses are indicated by the three LED indicators and the *'Error'* identifier on the LCD screen – see also the "Troubleshooting" chapter:

LCD screen

If a fault occurs, the identifier *'Error'* appears and an additional error message.

LED displays

Operating indicator (green): The operating indicator lights up if there are no incoming fault or warning messages when the pump is in operation. It goes out briefly with every stroke.

Warning indicator (yellow): The warning indicator lights up if the pump electronics detect a condition which may lead to a fault, e.g. "Liquid level low 1st stage".

Fault indicator (red): The fault indicator lights up if a fault occurs e.g. “Liquid level low 2nd stage".

5.4.3 Hierarchy of operating modes, functions and fault statuses

The different operating modes, functions and fault statuses have a different impact on whether and how the pump reacts.

The following list shows the order:

1. - Priming
2. - Error, Stop
3. - Pause
4. - Auxiliary frequency (external frequency changer)
5. - Manual, external contact

Comments:

re 1. - “Priming" can take place in any pump mode.

re 2. - "Error", and "Stop" stop everything apart from "Priming".

re 3. - “Pause” stops everything apart from “Priming”, “Error” and “Stop”.

re 4. - The "Auxiliary frequency" stroke rate always has priority over the stroke rate specified by an operating mode listed under 5.

6 Assembly

– *Compare the dimensions on the dimensional drawing with those of the pump.*

CAUTION!

Danger from incorrectly operated or inadequately maintained pumps

Danger can arise from a poorly accessible pump due to incorrect operation and poor maintenance.

– Ensure that the pump is accessible at all times.
– Adhere to the maintenance intervals.

Capacity too low

The liquid end valves can be disturbed by vibrations.

– *Secure the metering pump so that no vibrations can occur.*

Capacity too low

If the valves of the liquid end are not vertical, they cannot close correctly.

– *Suction and discharge valves must stand vertically upwards (the bleed valve with the self-bleeding liquid end).*

→ Assemble the metering pump with the pump foot on a horizontal, level and load-bearing base surface.

7 Installation, hydraulic

Safety information



CAUTION!

Warning of feed chemical spraying around

An unsuitable feed chemical can damage the parts of the pump that come into contact with the chemical.

– Take into account the resistance of the wetted materials and the ProMinent Resistance List when selecting the feed chemical - see the ProMinent Product Catalogue or visit ProMinent.



CAUTION!

Warning of feed chemical spraying around

Feed chemical may spray out of the hydraulic components if they are tampered with or opened due to pressure in the liquid end and adjacent parts of the system.

– Disconnect the pump from the mains power supply and ensure that it cannot be switched on again by unauthorised persons.
– Ensure that the system is at atmospheric pressure before commencing any work on hydraulic parts of the system.



CAUTION!

Danger from rupturing hydraulic components

Peak loads during the dosing stroke can cause the maximum permissible operating pressure of the system and pump to be exceeded.

– The discharge lines are to be properly designed.

7.1 Installing hose lines

7.1.1 Installation of metering pumps without bleed valve

Safety information



CAUTION!

Warning of feed chemical spraying around

The pipes can become loose or rupture if they are not installed correctly.

– Route all hose lines so they are free from mechanical stresses and kinks.
– Only use original hoses with the specified hose dimensions and wall thicknesses.
– Only use clamp rings and hose nozzles that are intended for the hose diameter in question to ensure the long service life of the connections.

CAUTION!

Danger from rupturing hydraulic components

Hydraulic components can rupture if the maximum permissible operating pressure is exceeded.

- Always adhere to the maximum permissible operating pressure of all hydraulic components - please refer to the product-specific operating instructions and system documentation.
- Never allow the metering pump to run against a closed shut-off device.
- Install a relief valve.

CAUTION!

Hazardous feed chemicals can escape

Hazardous or extremely aggressive feed chemicals can escape outside when using conventional bleeding procedures with metering pumps.

- Install a bleed line with return line into the storage tank.

CAUTION!

Hazardous feed chemicals can escape

Hazardous or extremely aggressive feed chemicals can escape outside in the event that the metering pump is removed from the installation.

- Install a shut-off valve on the discharge and suction side of the metering pump.

CAUTION!

Uncontrolled flow of feed chemical

Feed chemical may press through a stopped metering pump if there is back pressure.

- Use an injection valve or a vacuum breaker.

CAUTION!

Uncontrolled flow of feed chemical

The feed chemical can leak through the metering pump in an uncontrolled manner in the event of excessive priming pressure.

- Do not exceed the maximum priming pressure for the metering pump - please refer to the product-specific operating instructions.

Align the pipes so that the metering pump and the liquid end can be removed from the side if necessary.

Installing hose lines - versions PP, NP, PV

1. Cut off the ends of the hoses at right angles.
2. Pull the union nut (2) and clamp ring (3) over the hose (1) - see Fig. 7.

3. Push the hose end (1) up to the stop over the nozzle (4) and widen, if necessary.

Ensure that the O-ring and/or the flat seal (5) is sitting properly in the valve (6).

Never re-use used PTFE seals. An installation sealed in this way is not watertight.

This type of seal is permanently distorted when subjected to pressure.

The FPM flat seal PV version has a dot to enable it to be distinguished from the EPDM flat seal.

4. Place the hose (1) with the nozzle (4) onto the valve (6).

5. Clamp the hose connector: Tighten the union nut (2) while simultaneously pressing on the hose (1).

6. Re-tighten the hose connector: Pull on the hose (1) briefly, which is fastened to the dosing head and then tighten the union nut (2) once more.

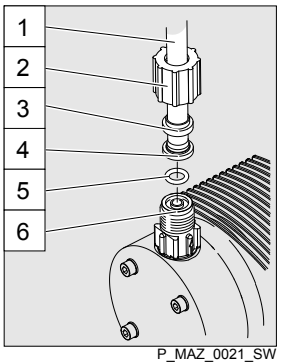

Fig. 7: Versions PP, NP, PV

1 Hose
2 Union nut
3 Clamp ring
4 Nozzle
5 O-ring or flat seal
6 Valve

Installing stainless steel pipe - SS designs

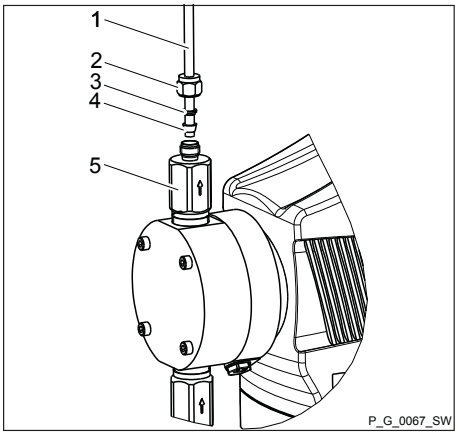

Fig. 8: SS designs with pipe

1 Pipe
2 Union nut
3 Rear clamp ring
4 Front clamp ring
5 Valve

1. Push the union nut (2) and clamp rings (3, 4) over the pipe (1) with approx. 10 mm overhang - see Fig. 8.
2. Insert the pipe into the valve as far as the stop - a threaded connector is shown in the following drawings instead of the valve - see Fig. 9 a).
3. Tighten the union nut until finger-tight – until the pipe can no longer be turned by your hand or no longer moved axially in the valve.
4. Mark the union nut at the 6 o/clock position - see Fig. 9 b).
5. Use an open-ended spanner to counter hold the valve housing and use another open-ended spanner to tighten the union nut 1 1/4 revolutions to the 3 o’clock position - see Fig. 9 c).

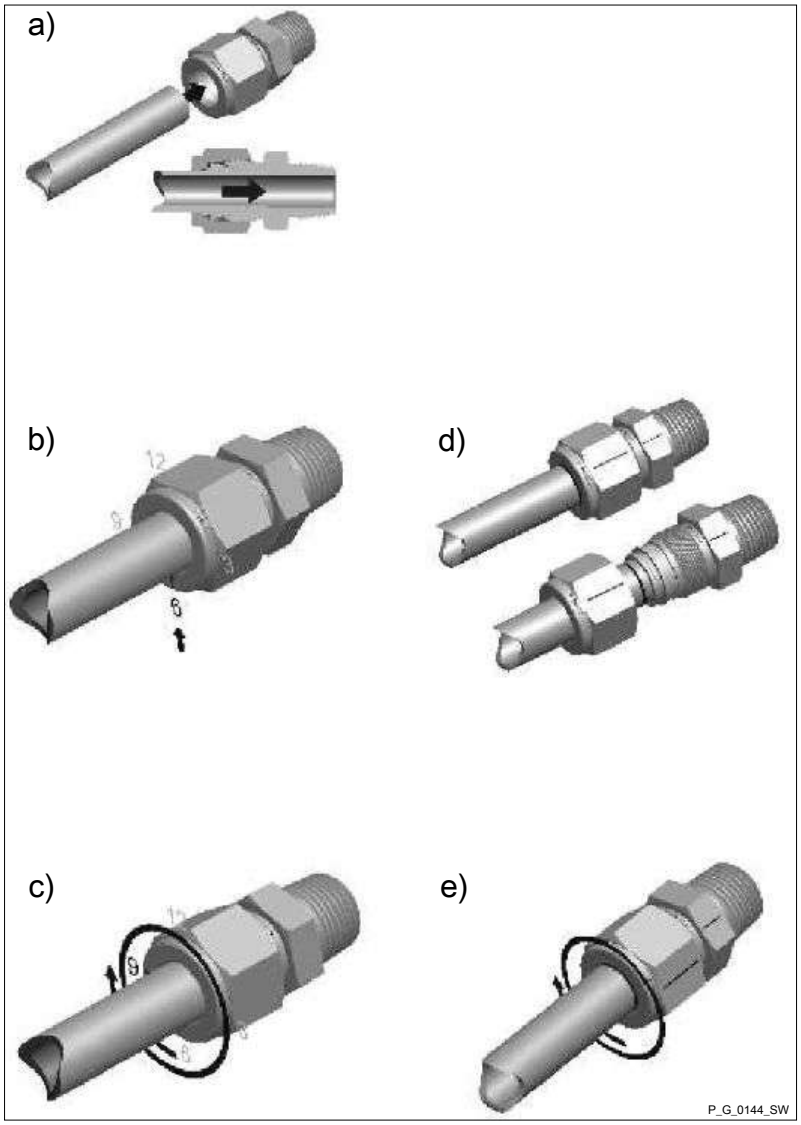

Fig. 9

To disassemble, refit

Adhere to the following notes to ensure that the threaded connector can be frequently tightened.

1. Prior to disassembly: Draw a line over two adjacent width flats of the union nut and valve - see Fig. 9 d).
2. When re-fitting: Insert the pipe with the clamp rings into the valve body until the front clamp ring is sitting in the valve - see Fig. 9 d).
3. Use an open-ended spanner to counter hold the valve housing and use another open-ended spanner to tighten the union nut to its final position, indicated by the two lines on the pipe and valve (the resistance will increase noticeably at this point - see Fig. 9 e)

Installing hose lines - SS version

CAUTION!

Warning of feed chemical spraying around

Connections can come loose in the event that hose lines are installed incorrectly on stainless steel valves.

- Only use PE or PTFE hose lines.
- In addition, insert a stainless steel support insert into the hose line.

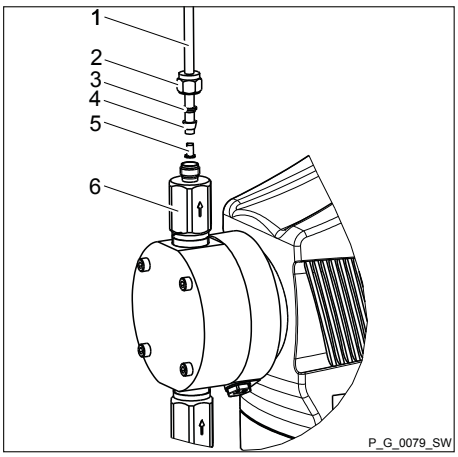

1 Hose
2 Union nut
3 Rear clamp ring
4 Front clamp ring
5 Support insert
6 Valve

Fig. 10: SS version with hose

7.1.2 Installation of metering pumps with bleed valve

Safety information

CAUTION!

- All the installation and safety information for metering pumps without bleed valves also applies.

Installation of the return line

A return line is also connected in addition to the suction and discharge line.

1. Attach the hose line to the return hose nozzle or to the liquid end bleed valve. PVC hose, soft, 6x4 mm is recommended.
2. Feed the free end of the return line into the storage tank.
3. Shorten the return line so that it is not immersed in the feed chemical in the storage tank.

7.2 Basic installation notes

Safety notes

CAUTION!

Danger resulting from rupturing hydraulic components

Hydraulic components can rupture if the maximum permissible operating pressure is exceeded.

- Never allow the metering pump to run against a closed shut-off device.
- With metering pumps without integral relief valve: Install a relief valve in the discharge line.

CAUTION!

Hazardous feed chemicals can escape

With hazardous feed chemicals: Hazardous feed chemical can leak out when using conventional bleeding procedures with metering pumps.

– Install a bleed line with a return into the storage tank.

→ Shorten the return line so that it does not dip into the feed chemical in the storage tank.

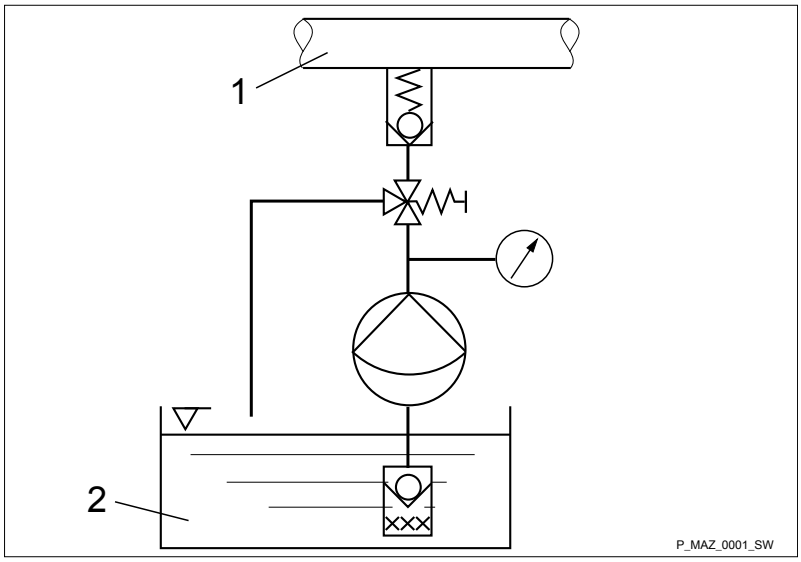

Fig. 11: Standard installation

1 Main line
2 Storage tank

Legend for hydraulic diagram

Symbol	Explanation	Symbol	Explanation
	Metering pump		Foot valve with filter meshes
	Injection valve		Level switch
	Multifunctional valve		Manometer

8 Installation, electrical



WARNING!

Risk of electric shock

This pump is supplied with a grounding conductor and a grounding-type attachment plug.

– To reduce the risk of electric shock, ensure that it is connected only to a proper grounding-type receptacle.



WARNING!

Risk of electric shock

In the event of an electrical accident, the pump must be quickly disconnected from the mains.

– Install an emergency cut-off switch in the pump power supply line or
– Integrate the pump in the emergency cut-off management of the system and inform personnel of the isolating option.



WARNING!

Danger of electric shock

Incompletely installed electrical options can allow moisture into the inside of the housing.

– Knock-out openings in the pump housing must be equipped with matching modules or be sealed in a leak-tight manner.



WARNING!

Danger of electric shock

Supply voltage may be present inside the pump housing.

– Safely and quickly disconnect the pump from the mains/power supply if the pump housing has been damaged.
  Only return the pump to operation after an authorised repair.



WARNING!

Low-voltage pump only: Danger of electric shock

For safety reasons, solely operate the low-voltage pump with protective low voltage (SELV in accordance with EN 60335-1).



CAUTION!

Material damage possible due to power surges

Should the pump be connected to the mains power supply in parallel to inductive consumers (such as solenoid valves, motors), inductive power surges can damage the control when it is switched off.

– Provide the pump with its own contacts (Phase) and supply with voltage via a contactor relay or relay.
– Should this not be possible, then switch a varistor (part no. 710912) or an RC gate (0.22 µF/220 Ω, part no. 710802) in parallel.



CAUTION!

Bonding of the contacts of your switching relay

The high starting current can cause the contacts of the on-site switching relay to bond together if the mains voltage switches a solenoid metering pump on and off in a process.

- Use the switching options offered by the external socket to control the pump (functions: Pause, Auxiliary frequency or Operating modes: Contact, Batch, Analogue).
- Use a starting current limiter if it is impossible to avoid switching the pump on and off via a relay.

Personnel: ■ Electrician

→ Install the pump in line with best working practice and in accordance with the operating instructions and applicable regulations.

8.1 Supply voltage connector - power supply



WARNING!

Unexpected start-up is possible

The pump can start pumping and consequently feed chemical may escape as soon as the pump is connected to the mains/power supply.

- Avoid the escape of feed chemical.
- If you have not done so, immediately press *[STOP/START]* or disconnect the pump from the mains voltage e.g. using an Emergency Stop switch.
- Refer to the material safety data sheet for your feed chemical.



CAUTION!

If the pump is integrated into a system: Design the system so that potential hazardous situations are avoided by pumps starting up automatically subsequent to unintended power interruptions.

Connect the pump to the mains/power supply using the mains cable.

8.2 Supply voltage connector - low voltage



WARNING!

Danger of electric shock

Solely operate the low-voltage pump with protective low voltage (SELV in accordance with EN 60335-1).

CAUTION!
Performance losses are possible.

– The drop in voltage on the supply line for the 12 - 24 V version must remain small enough, even at the moment of the pump stroke, that the pump voltage never drops below 11 V!
– The drop in voltage on the supply line for the 24 V version must remain small enough, even at the moment of the pump stroke, that the pump voltage never drops below 20 V!

CAUTION!
If the pump is integrated into a system: Design the system so that potential hazardous situations are avoided by pumps starting up automatically subsequent to unintended power interruptions.

INFORMATION: The DC voltage pump only works if the polarity is correct.

8.3 Description of the terminals

8.3.1 "External control" terminal

The "External control" terminal is a five-pin panel terminal compatible with two- and four-pin cables.

Only use a five-pin cable with the "Auxiliary frequency" and "mA-input" functions.

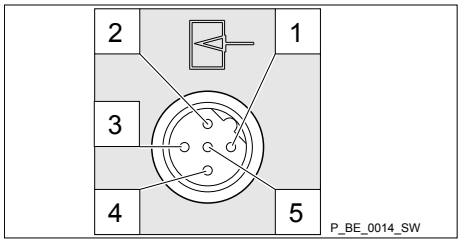

Fig. 12: Assignment on the pump

Electrical interface for pin 1 "Pause" - pin 2 "External contact" - pin 5 "Auxiliary frequency"

Data	Value	Unit
Voltage with open contacts	5	V
Input resistance	10	kΩ
Max. pulse frequency	25	pulse/s
Min. pulse duration	20	ms

Control via:

- potential-free contact (load: 0.5 mA at 5 V) or
- semiconductor switch (residual voltage < 0.7 V)

Electrical interface for pin 3 "mA input" (with identity code characteristic "Control version": 2 and 3)[1]

Data	Value	Unit
Input load, approx.	120	Ω

[1] The metering pump makes its first metering stroke at approx. 0.4 mA (4.4 mA) and starts continuous operation at approx. 19.2 mA.

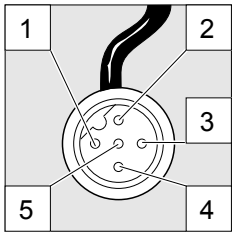

Fig. 13: Assignment on the cable

Pin	Function	5-wire cable	2-wire cable
1	Pause	brown	bridged at pin 4
2	External contact	white	brown
3	mA input*	blue	-
4	Earth GND	black	white
5	Auxiliary frequency	grey	-

* with identity code characteristic "Control version": 2 and 3

INFORMATION: Refer to the functional description for the hierarchy of functions and operating modes.

"Pause" function

The pump does not work if:

- the cable is connected and pin 1 and pin 4 are open.

The pump works if:

- the cable is connected and pin 1 and pin 4 are connected.
- no cable is connected.

"External Contact" operating mode

The pump performs one or more strokes if:

- pin 2 and pin 4 are connected to each other for at least 20 ms. At the same time, pin 1 and pin 4 must also be connected to each other.

"Analogue" operating mode

The pump stroke rate can be controlled by a current signal. The current signal lies between pin 3 and pin 4.

Pin 1 and pin 4 must also be connected.

"Auxiliary frequency" operating mode

The pump works at a pre-set stroke rate if:

- pin 5 and pin 4 are connected to each other. At the same time, pin 1 and pin 4 must also be connected to each other. The auxiliary frequency is factory-pre-set to maximum stroke rate.

8.3.2 "Level switch" terminal

There is a connecting option for a 2-stage level switch with pre-warning and limit stop.

Electrical interface

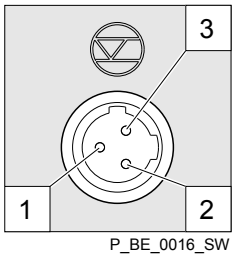

Fig. 14: Assignment on the pump

Data	Value	Unit
Voltage with open contacts	5	V
Input resistance	10	kΩ

Control via:

- potential-free contact (load: 0.5 mA at 5 V) or
- semiconductor switch (residual voltage < 0.7 V)

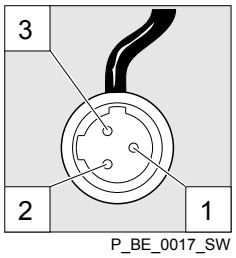

Fig. 15: Assignment on the cable

Tab. 2: Assignment on the cable

Pin	Function	3-wire cable
1	Earth GND	black
2	Minimum pre-warning	blue
3	Minimum limit stop	brown

8.3.3 "Metering monitor" terminal

There is a connecting option for a metering monitor.

Electrical interface

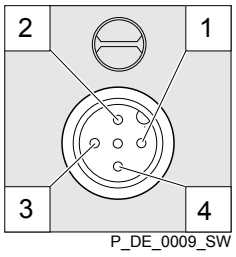

Fig. 16: Assignment on the pump

Data	Value	Unit
Voltage with open contacts	5	V
Input resistance	10	kΩ

Control via:

- potential-free contact (load: 0.5 mA at 5 V) or

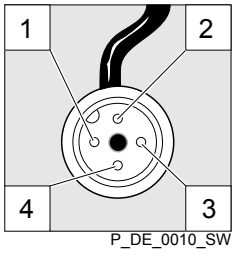

Fig. 17: Assignment on the cable

Pin	Function	4-wire cable
1	Power supply (5 V)	brown
2	Coding	white
3	Feedback	blue
4	Earth GND	black

8.3.4 Relay

8.3.4.1 Relay functions

Tab. 3: Concept L, CPLa

Identity code	Designation	Type	Maximum voltage	Maximum current	Behaviour of relay type when retrofitted, as standard
0	no relay	-	-	-	-
1	Fault indicating relay	NC	230 V	6 A	X
3	Fault indicating relay	NO	230 V	6 A	-
4	Fault indicating relay	NC	24 V	100 mA	-
	Pacing relay	NO	24 V	100 mA	-
5	Fault indicating relay	NO	24 V	100 mA	-
	Pacing relay	NO	24 V	100 mA	-
C	Fault indicating relay + 4-20 mA output	NC	24 V	100 mA	-
D	Fault indicating relay + 4-20 mA output	NO	24 V	100 mA	-

Tab. 4: Relay type switches in the event of...

Relay type	Level warning	Level low	Metering monitor Error	Calibrated stroke length Error*	Processor Error
Fault indicating relay / Power relay:	X	X	X	X	X

* only with “Calibration function" = 1

8.3.4.2 "Fault indicating relay" output (identity code 1 + 3)

A fault indicating relay can optionally be ordered. It switches in the event of a fault. An identity code pre-warns whether the relay closes or opens in the event of a fault.

If the fault indicating relay is retrofitted, it closes by default in the event of a fault. The relay board is fully functional once plugged in.

The pump is factory-programmed to "Fault indicating relay". Should another switching function be required, the pump can be reprogrammed in the Heidelberg works.

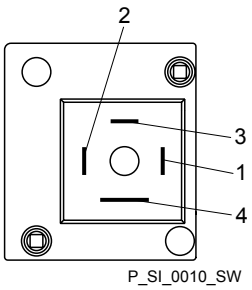

Fig. 18: Assignment on the pump

Electrical interface

Data	Value	Unit
Maximum contact load at 250 V and 50/60 Hz:	6	A
Minimum mechanical service life:	200,000	switching operations

Identity code 1 + 3

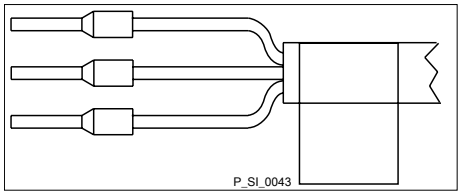

To pin	VDE cable	Contact	UL/CSA cable
1	white	N/O (normally open)	white
2	green	N/C (normally closed)	red
4	brown	C (common)	black

Fig. 19: Assignment on the cable

8.3.4.3 "Fault indicating and pacing relay" output (identity code 4 + 5)

A fault indicating and a pacing relay can optionally be ordered - refer to ordering information. The pacing output is electrically isolated by means of an optocoupler with a semiconductor switch. The second switch is a relay, as with the "Fault indicating relay" version.

The fault indicating/pacing relay can be retrofitted.

The pump is factory-programmed to "Fault indicating relay opening" and "Pacing relay closing". Should another switching function be required, the pump can be reprogrammed in the Heidelberg works.

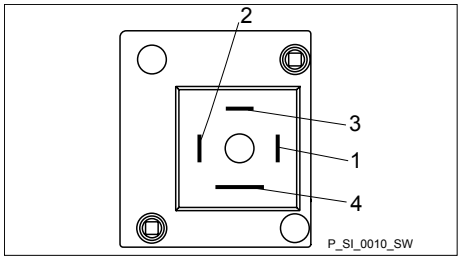

Fig. 20: Assignment on the pump

Electrical interface

for fault indicating relay output:

Data	Value	Unit
Maximum contact load at 24 V and 50/60 Hz:	100	mA
Minimum mechanical service life:	20,000,000	switching operations

for semiconductor switch pacing relay:

Data	Value	Unit
Max. residual voltage when I_C = 1 mA	0.4	V
Maximum current	100	mA
Maximum voltage	24	VDC
Pacing pulse duration, approx.	100	ms

Identity code 4 + 5

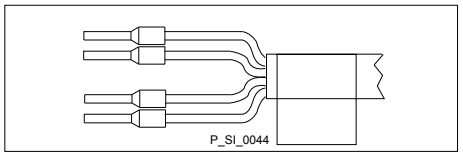

Fig. 21: Assignment on the cable

To pin	VDE cable	Contact	Relay
1	yellow	N/O (normally open)	Fault indicating relay
4	green	C (common)	Fault indicating relay
3	white	N/O (normally open)	Pacing relay
2	brown	C (common)	Pacing relay

9 Set

For supplementary information see "Control elements and key functions" in the chapter "Overview of equipment and control elements" and "Operating/setting overview" in the appendix.

The pump control returns to the continuous display, as soon as no key has been pressed for 1 minute.

9.1 Basic principles of pump set-up

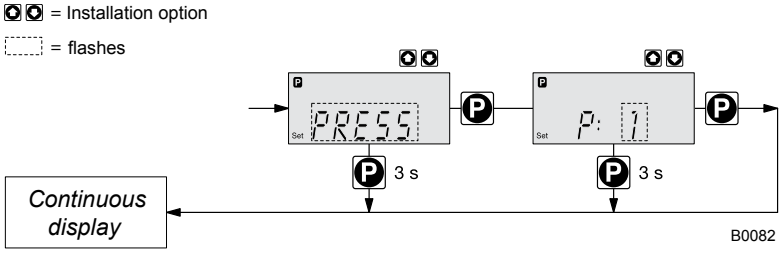

Fig. 22

Confirming an entry

Briefly press the *[P]* key

⇨ The display simultaneously changes to the next menu option or into a continuous display.

Exiting a menu option without confirming it

Press and hold the *[P]* key for 3 seconds

⇨ The input is cancelled and you jump back to a continuous display.

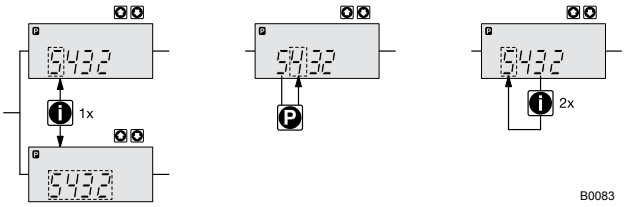

Fig. 23: a) Toggles between changing individual digits and changing a number; b) Changes the position within the number; c) Jump back in the number. More detailed explanations are given in the following text.

Incremental changing of a variable

Press the *[i]* key 1x.

You can toggle between altering the digits of a variable (“Change individual digits” = standard) and incremental changing of a variable (“Change a number”).

Changing adjustable variables

→ Press the arrow keys *[UP]* or *[DOWN]*.

⇨ The flashing digit or number counts up or down.

Confirming adjustable variables

→ Under "Change individual digits": confirm each digit by pressing the *[P]* key.

⇨ On confirming the last individual digit, the display simultaneously changes to the next menu option or into a continuous display.

→ Under "Change a number": Press the *[P]* key 1x.

⇨ The display simultaneously changes to the next menu option or into a continuous display.

Correcting incorrectly set digits

→ Press the *[i]* key 2x.

⇨ You jump back to the first digit.

9.2 Checking adjustable variables

Before you set up the pump control, you can check the actual settings of the adjustable variables:

→ Press *[i]* ("i" for "Info") if the LCD screen shows a continuous display – the display does not show the symbol for the *[P]* key.

⇨ Each press of the *[i]* key shows another continuous display.

The number of continuous displays depends on the identity code, the selected operating mode and the connected additional devices – see overview of "Continuous displays" in the appendix.

9.3 Changing to Setting mode

1. In a continuous display press the *[P]* key for at least 2 seconds.

   ⇨ The pump control changes to Setting mode.

2. If *'CODE 1'* was set, then after pressing the *[P]* key, the code must first be entered.

The following menus can initially be chosen in Setting mode - see also "Operating/adjustment overview" in the appendix:

- *'MODE'* menu
- *'CODE'* menu (option)
- *'SWVER'* menu
- *'SET'* menu
- *'CLEAR'* window

To match the pump to your process requirements, you must observe the following procedure:

1. Select the operating mode in the *'MODE'* menu.
2. If necessary, enter the settings for this operating mode in the *'SET'* menu.

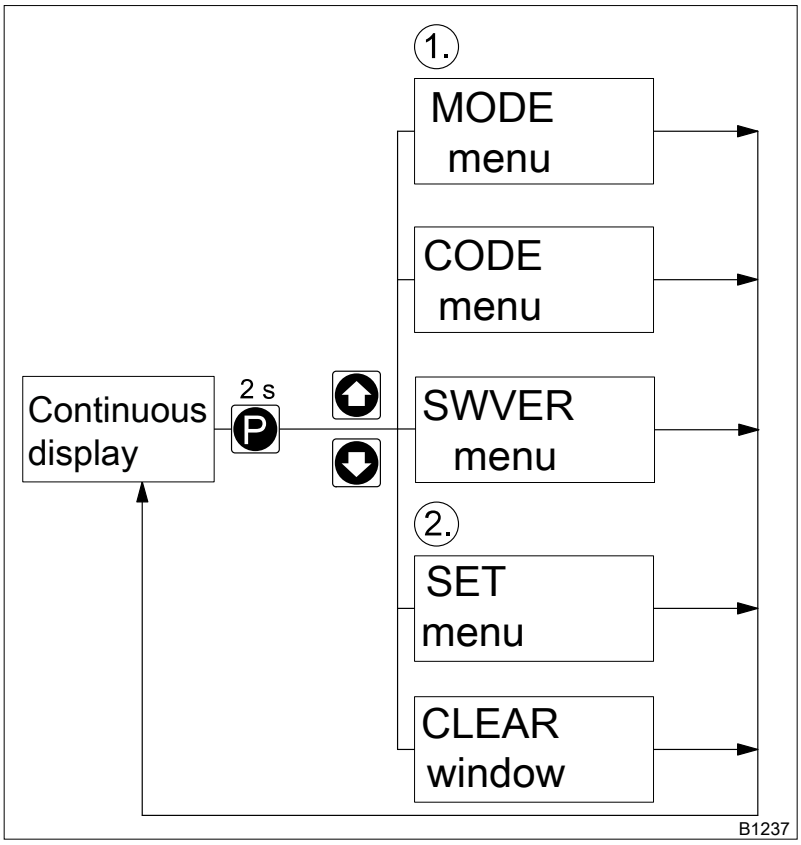

Fig. 24

Note the diagram.

9.4 Selecting the operating mode (MODE menu)

The following operating modes can be selected in the *'MODE'* menu (some operating modes may not be available depending on the identity code):

- *'Manual'*: for manual operation (identity code control version: "Manual", available as standard)
- *'Analog'*: for current control (identity code control version: "Analog current")
- *'Contact'*: for contact operation (identity code control version: "External 1:1" / "External with Pulse Control")
- *'Batch'*: for batch operation (identity code control version: "External with Pulse Control")

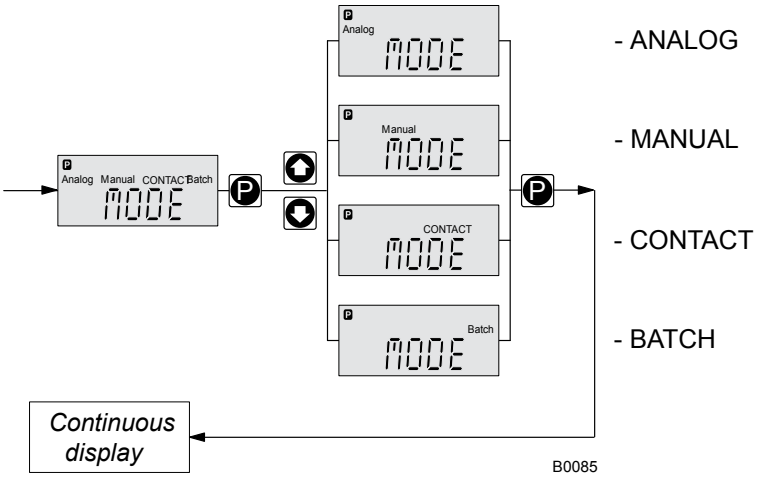

Fig. 25

9.5 Operating mode settings (SET menu)

First select the operating mode in the 'MODE' menu!

In the *'SET'* menu, you can enter various settings depending on the operating mode selected.

Setting menus are available in all operating modes for the following programmable functions:

- Auxiliary frequency (*'AUX'* menu)
- Flow (*'FLOW'* menu; only available if a metering monitor is connected) - see also the chapter "Programmable function settings (SET menu)".

Whether a further setting menu is available depends on the operating mode selected and the identity code.

9.5.1 "Manual" operating mode settings

Apart from the setting menus described in more detail in the chapter "Programmable function settings (SET menu)", there are no other setting menus available in *'Manual'* operating mode in the *'SET'* menu.

9.5.2 "Analog" operating mode settings (ANALG menu)

Overview

Apart from the setting menus described in more detail in the chapter "Programmable function settings (SET menu)", the *'ANALG'* menu is also available in *'Analog'* operating mode in the *'SET'* menu.

The stroke rate is controlled using an analogue current signal via the "External control" terminal.

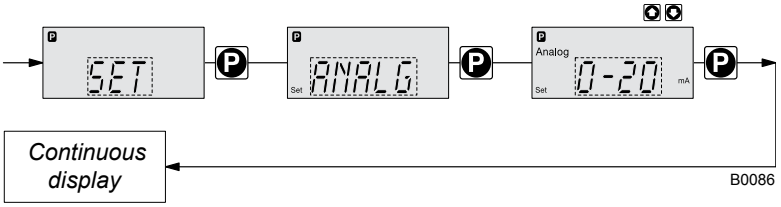

Fig. 26

You can select 3 types of current signal processing:

- *'0 - 20 mA'*:
  - At 0 mA the pump is stationary.
  - At 20 mA the pump works at maximum stroke rate.
  - Between these values, the stroke rate is proportional to the current signal.
- *'4 - 20 mA'*:
  - At 4 mA the pump is stationary.
  - At 20 mA the pump works at maximum stroke rate.
  - Between these values, the stroke rate is proportional to the current signal.
  - A fault message appears and the pump stops for current signals less than 3.8 mA (e.g. if a cable has broken).
- *'Curve'* (not with current output): Under the *'Curve'* processing type, you can freely program the pump behaviour. There are three options:
  - Linear ·····
  - Lower side band --__
  - Upper side band __/--

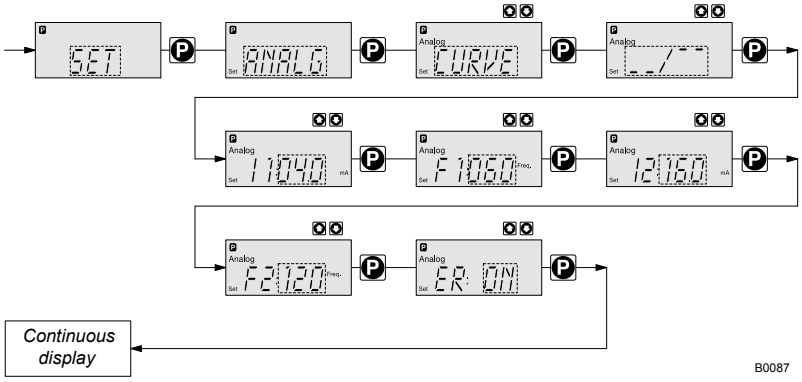

Fig. 27

Linear

The symbol ····· appears on the LCD screen. You can enter any pump stroke rate behaviour proportional to the current signal. To do this, enter any two points P1 (I1, F1) and P2 (I2, F2) (F1 is the stroke rate at which the pump is to operate at current I1); this defines a straight line and thus the behaviour is specified:

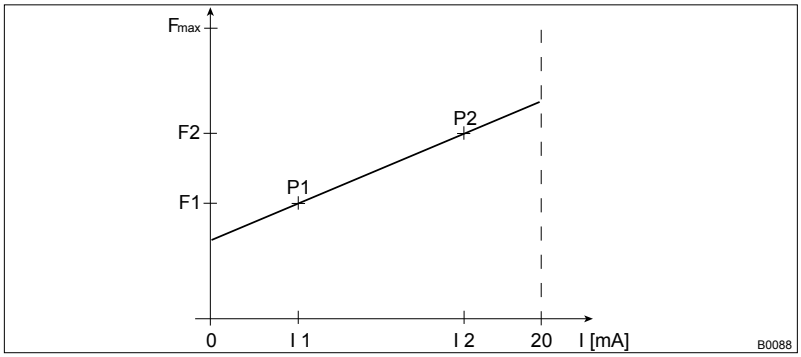

Fig. 28

F1 Stroke rate at which the pump should operate with current I1
F2 Stroke rate at which the pump should operate with current I2

Plot a diagram similar to the one above - with values for (I1, F1) and (I2, F2) – so that you can set the pump control as required.

Upper/lower side band

Using these processing types, you can control a metering pump using the current signal as shown in the diagrams below.

Lower side band:

The symbol ⁻⁻__ appears on the LCD screen. Below I1, the pump works at a rate of F1 - above I2 it stops. Between I1 and I2 the stroke rate varies between F1 and F2 in proportion to the signal current.

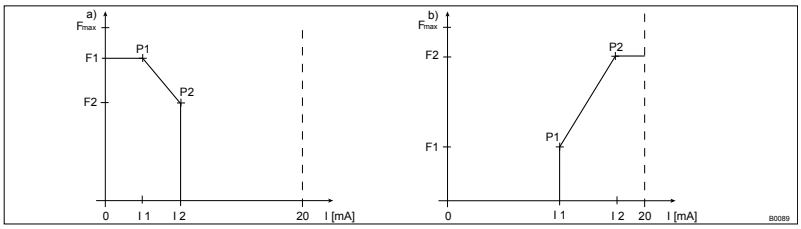

Fig. 29: Lower side band, e.g. alkali pump

Upper side band:

The symbol __/⁻⁻ appears on the LCD screen. Below I1, the pump is stationary - above I2 the pump works at rate F2. Between I1 and I2 the stroke rate varies between F1 and F2 in proportion to the signal current.

The smallest processable difference between I1 and I2 is 4 mA.

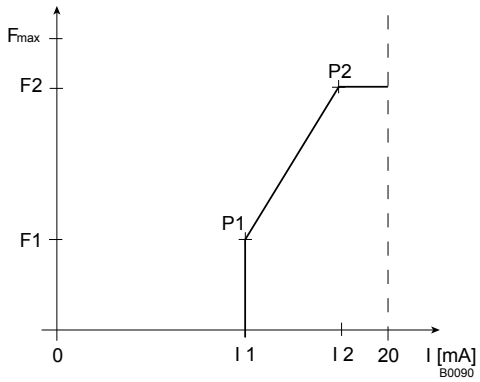

Fig. 30: Upper side band, e.g. acid pump

Error processing

Under menu option *'ER'* (Error) you can activate error processing for the *'Curve'* processing type. For current signals below 3.8 mA, an error message appears and the pump stops.

9.5.3 "Contact" operating mode settings (CNTCT menu)

Apart from the setting menus described in more detail in the chapter "Programmable function settings (SET menu)", the *'CNTCT'* menu is also available in *'Contact'* operating mode in the *'SET'* menu.

'Contact' operating mode lets you trigger individual strokes or a stroke series. You can trigger the strokes via a pulse sent via the "External control" terminal. The purpose of this operating mode is to convert the incoming pulses into strokes with a step-down (fractions) or small step-up.

CAUTION!
If you change into another operating mode, the factor is reset to "1".

With identity code version "Contact - identity code: Manual + External with Pulse Control", you can enter after how many pulses a stroke is to occur. "Contact - identity code: Manual + External with Pulse Control" is intended for small metering quantities.

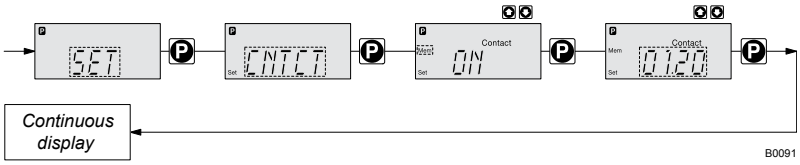

Fig. 31

The number of strokes per pulse depends on the factor which you input. You can therefore multiply incoming pulses by a factor of 1.01 to 99.99 or reduce them by a factor of 0.01 to 0.99:

Number of strokes executed = factor x number of incoming pulses

Example

Tab. 5: Table of examples

	Factor	Pulse (sequence)	Number of strokes (sequence)
Step-up	1	1	1
	2	1	2
	25	1	25
	99.99	1	99.99
	1.50	1	1.50 (1 / 2)
	1.25	1	1.25 (1 / 1 / 1 / 2)
Reduction	1	1	1
	0.50	2	1
	0.10	10	1
	0.01	100	1
	0.25	4	1
	0.40	2.5 (3 / 2)	(1 / 1)
	0.75	1.33 (2 / 1 / 1)	(1 / 1 / 1)

Tab. 6: Explanation of step-up

Factor	Pulse and strokes
with a factor 1 ...	1 stroke is executed per 1 pulse
with a factor 2 ...	2 strokes are executed per 1 pulse
with a factor 25 ...	25 strokes are executed per 1 pulse

Tab. 7: Explanation of reduction

Factor	Pulse and strokes
with a factor 1 ...	1 stroke is completed after 1 pulse
with a factor 0.5 ...	1 stroke is completed after 2 pulses
with a factor 0.1 ...	1 stroke is completed after 10 pulses
with a factor 0.75 ...	1 stroke is completed after 2 pulses once, then 1 stroke is completed after 1 pulse twice and then (repeating) 1 stroke after 2 pulses, etc...

If a remainder is obtained when dividing by the factor, then the pump software adds the remainders together. As soon as this sum reaches or exceeds "1", the pump executes an additional stroke. Therefore on average during the metering operation, the resultant number of strokes precisely matches the factor.

"Memory" function extension

You can also activate the "Memory" function extension (identifier *'Mem'* appears on the LCD screen; *'Mem'* = memory). When "Memory" is activated, the pump software adds up the remaining strokes , which could not be processed, up to the maximum capacity of the stroke memory of 65,535 strokes. If this maximum capacity is exceeded, the pump goes into fault mode.

9.5.4 "Batch" operating mode settings (BATCH menu)

Apart from the setting menus described in more detail in the chapter "Programmable function settings (SET menu)", the *'BATCH'* menu is also available in *'Batch'* operating mode in the *'SET'* menu.

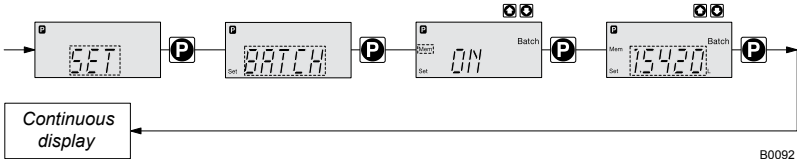

Fig. 32

'Batch' operating mode is a version of the *'Contact'* operating mode - in the first place see " *'Contact'* operating mode settings". Here also, you can select a number of strokes (no fractions, only integers from 1 to 65535), but also a metering quantity (Batch). To change between the input "Number of strokes" and "Metering quantity" press the *[i]* key 1x under the corresponding menu option (see "Operating / setting overview" in the appendix).

'Batch' operating mode is intended for large metering quantities.

The metering can be triggered either by pressing the *[P]* key or by a pulse received via the "External control" terminal.

The number of received pulses, which could not yet be processed, is stored by the pump control in the stroke memory. The stroke memory is limited to the Batch size if "Memory" is not activated, with "Memory" at 65535 strokes.

You can delete it by changing to another operating mode.

"Memory" function extension

You can also activate the "Memory" function extension (identifier *'Mem'* appears on the LCD screen; *'Mem'* = memory). When "Memory" is activated, the pump software adds up the remaining strokes , which could not be processed, up to the maximum capacity of the stroke memory of 65,535 strokes. If this maximum capacity is exceeded, the pump goes into fault mode.

9.6 Programmable function settings (SET menu)

Setting menus are available in the SET menu in all operating modes for the following programmable functions:

- Calibration (*'CALIB'* menu, only available with identity code characteristic *'Calibration function'* = 1)
- Auxiliary frequency (*'AUX'* menu)
- Flow (*'FLOW'* menu; only available if a metering monitor is connected)

9.6.1 “Calibrate” function settings (CALIB menu)

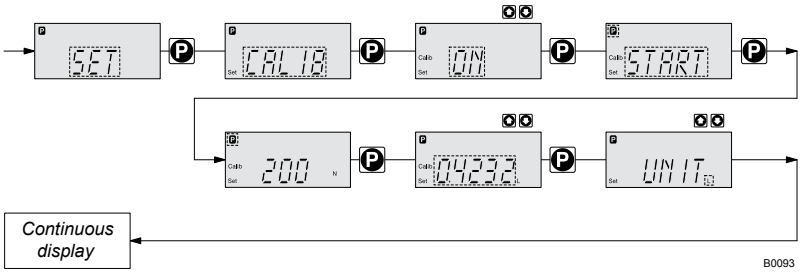

Fig. 33

The pump can also be operated in a calibrated state (only available with identity code characteristic *‘Calibration function’* = 1 - with stroke length sensor). In this case, the corresponding continuous displays then indicate the metering volume or the capacity directly. The calibration is maintained when the stroke length is altered by up to ±10 scale divisions (for a set stroke length of 40 % this corresponds to a range from 30 % ... 50 %). If the stroke length is changed by more than ±10 scale divisions, the yellow warning light lights up, the continuous display flashes and the flashing identifier *‘Calib’* appears.

– *Do not allow the stroke length to fall below 30 % (self-bleeding: 50 %)!*
  Otherwise the calibration becomes very inaccurate.
– *Calibration becomes more accurate, the more strokes the pump makes during calibration. Recommendation: at least 200 strokes.*

Calibration

CAUTION!
Danger with dangerous feed chemicals
Provided the following handling instructions are followed, contact with the feed chemical is possible.

– If the feed chemical is dangerous, take appropriate safety precautions when carrying out the following handling instructions.
– Observe the feed chemical safety data sheet.

1. Lead the suction hose into a measuring cylinder containing the feed chemical – make sure that the discharge hose is installed permanently (operating pressure, ...!).
2. Prime the feed chemical (press both arrow keys simultaneously), should the suction hose be empty.
3. Record the level in the measuring cylinder and the stroke length.
4. Select the *‘CALIB’* menu and press *[P]* to move to the first menu option.
5. Use the arrow key to select *‘ON’* and press *[P]* to move to the next menu item.
6. Press *[P]* to start calibration: The pump starts pumping and indicates the stroke rate - *‘STOP’* appears at certain intervals. The pump works at the stroke rate set under *‘MANUAL’*.
7. After a reasonable number of strokes, stop the pump with the *[P]* key.
8. Determine the required metering volume (difference between initial volume - remaining volume).
9. Enter this amount under the next menu option and then press *[P]* to move to the next menu option.

10. Under menu option *'UNIT'* select the units (*'L'* or *'gal'*) using the arrow keys and press the *[P]* key.

    ⇨ The pump is calibrated.

Consequence:

- The corresponding continuous displays indicate the calibrated values.
- Total number of strokes and total litres are set to "0" by calibration.
- The pump is in the STOP state.

9.6.2 "Pressure stages" function settings (PRESS menu)

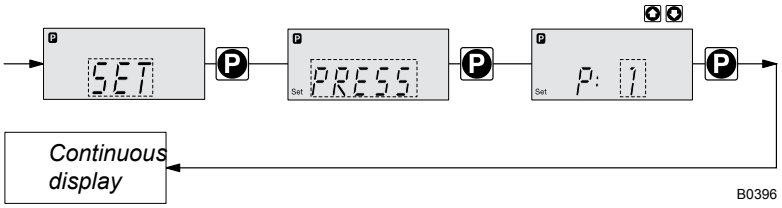

Using the "Pressure stages" function, you can reduce the nominal pressure of the Concept L.

CAUTION!
Select the pump nominal pressure so it is as large as necessary and as small as possible!

In doing so you are increasing the safety of your system (reduced risk that lines will burst if blocked)!

CAUTION!
The nominal pressure can be considerably exceeded for stroke lengths of less than 100 %! The nominal pressure relates to a 100 % stroke length.

CAUTION!
Should a different liquid end size be fitted, then the pump must be reprogrammed in the factory!

The following nominal pressures can be selected for these liquid end sizes:

Tab. 8: Selectable nominal pressures (bar)

Size of liquid end	Pressure stage 1	Pressure stage 2	Pressure stage 3	Pressure stage 4
1601, 1602, 1604	4	7	10	16
1000, 1008	4	7	10	-
0708, 0713	4	7	-	-

No set-up is possible for pump types 0413, 0420, 0220, and 0232.

9.6.3 “Auxiliary frequency” function settings (AUX menu)

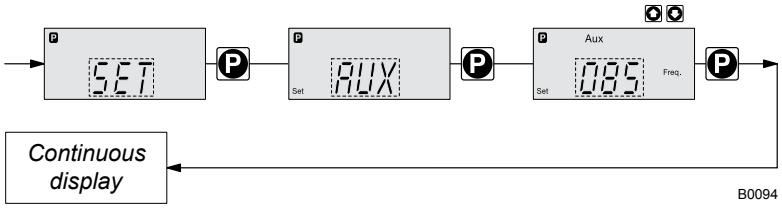

Fig. 34

The programmable function "Auxiliary frequency" facilitates the activation of an auxiliary stroke rate, which can be set in the *‘AUX’* menu. It can be activated via the "External control" terminal. The identifier *‘Aux’* appears on the LCD screen if the auxiliary frequency is being used.

This auxiliary frequency has priority over the stroke rate, which is specified by the currently selected operating mode.

9.6.4 “Flow” function settings (FLOW menu)

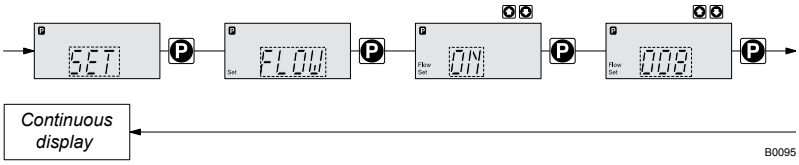

Fig. 35

The *‘FLOW’* menu only appears if a dosing monitor is connected to the "Metering monitor" terminal. The metering monitor records the individual metering strokes of the pump at the pressure connector and reports them back to the pump control. If this feedback is sequentially missing for as often as set in the *‘FLOW’* menu (after a fault or too low metering), the pump is stopped.

9.7 Setting the code (CODE menu)

In the *‘CODE’* menu, you can enter whether you want to lock some of the setting options.

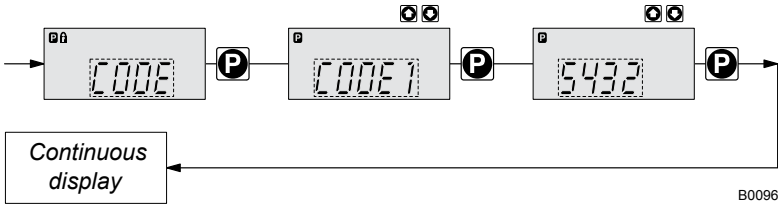

Fig. 36

In the first menu option, you can set either CODE 1 or CODE 2 (both use the same number).

- Select *‘CODE 1’*, to block Setting mode (① in Fig. 39). In the next menu option, enter the number you want to use as the code.
- Select *‘CODE 2’*, to block the option to adjust the directly changeable variables in the continuous displays (② in Fig. 39). In the next menu option, enter the number you want to use as the code.
- Select *‘NONE’* to clear a set security lock.

9.8 Checking the software version (SWVER menu)

You can check the software version of the pump in the *‘SWVER’* menu.

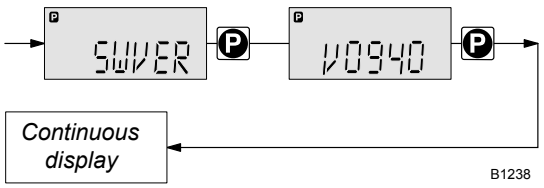

Fig. 37

9.9 Deleting the total number of strokes or total litres (CLEAR window)

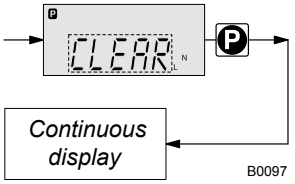

Fig. 38

In the *'CLEAR'* window, you can delete the stored total number of strokes and simultaneously the total litres (= reset to "0"). To do this exit the window by quickly pressing the *[P]* key.

The values have increased since the pump was commissioned or since they were last deleted.

A total litre figure is only available with a calibrated pump.

10 Operation

This chapter describes all the operating options available to you if the pump control is showing a continuous display - then the display does not contain the symbol for the *[P]* key.

- *For supplementary information, please read the overviews "Control elements and key functions" and see the "Operating/setting diagram" at the end of the operating instructions.*
- *Also refer to the "Continuous displays" overview. It shows which continuous displays are available in which operating mode and which variables can be directly changed in the relevant continuous display.*

10.1 Manual operation

Adjusting the stroke length

The stroke length can be continuously adjusted using the stroke length adjustment knob within the range of 0 ... 100 %. The recommended stroke length range, in which the set metering quantity can, from a technical point of view, be accurately reproduced, is 30 ... 100 %.

The following operating options are available via the keys - see the figure on the next page:

Stop/start pump

Stop the pump: Press *[START/STOP]*.

Start the pump: Press the *[START/STOP]* key again.

Start a batch

In *'Batch'* operating mode: Briefly press the *[P]* key.

Changing to Setting mode

In continuous display if you keep the *[P]* key pressed for 2 s, the pump control switches to Setting mode - see "Setting" chapter.

If *'CODE 1'* was set, then after pressing the *[P]* key, the code must first be entered.

Checking adjustable variables

Each press of the *[i]* key shows another continuous display. The number of continuous displays depends on the identity code, the selected operating mode and the additional devices connected.

Changing directly adjustable variables

To change a variable (see below) directly in the corresponding continuous display, press one of the *[arrow keys]* until the *[Set]* identifier appears.

(The delay period has been programmed in to prevent unintentional changing of variables.)

If *'CODE 2'* was set, then after an *[arrow key]* has been pressed, the code must first be entered.

The **directly changeable variables** are in detail:

Stroke rate

In *'Manual'*, *'Contact'* and *'Batch'* operating modes:

You can change the stroke rate in the *'Stroke rate'* continuous display.

Capacity

In *'Manual'* operating mode:

You can change the capacity in the "Capacity" continuous display.

This continuous display only appears with a calibrated pump.

Factor

The factor is the number of strokes which are triggered on an external pulse or when *[P]* is pressed (only in *'Batch'* operating mode).

In *'Batch'* operating mode:

You can change the factor from the "Remaining strokes" continuous display. A couple of seconds after your have set the factor, the pump control jumps back to the initial continuous display.

Batch size

In *'Batch'* operating mode:

You can change the batch size from the "Batch size/Remaining litres" continuous display. A couple of seconds after you have set the batch size, the pump control jumps back to the initial continuous display.

This continuous display only appears with a calibrated pump.

Priming

Simultaneously pressing the two *[arrow keys]* triggers the "Priming" function.

Acknowledging errors

Fault displays are acknowledged by briefly pressing the *[P]* key.

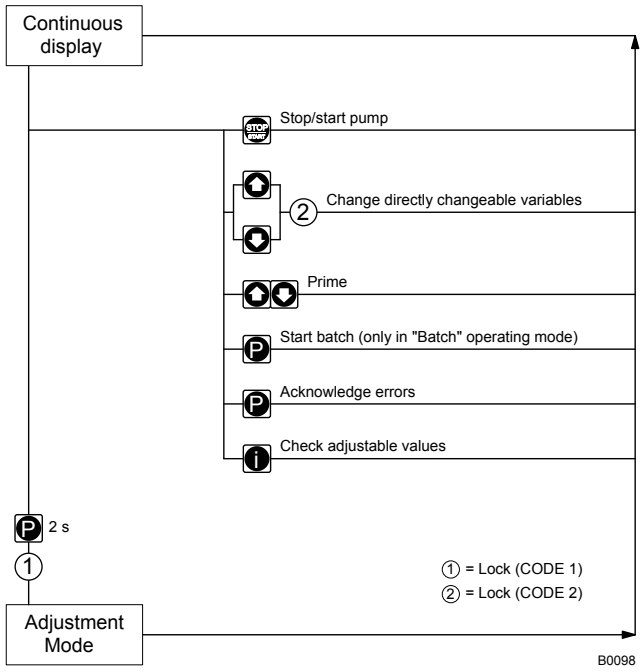

Fig. 39

10.2 Remote operation

There is an option to control the pump remotely via a control cable - see chapter "Settings - Selecting the operating mode (MODE menu)" and your system documentation.

11 Maintenance

WARNING!
It is mandatory that you read the safety information and specifications in the "Storage, Transport and Unpacking" chapter prior to shipping the pump.

WARNING!
Feed chemical can leak from badly maintained pumps.

– Comply with the stated maintenance intervals, particularly in relation to hazards associated with the feed chemical.

CAUTION!
Warning of feed chemical spraying around
Feed chemical may spray out of the hydraulic components if they are tampered with or opened due to pressure in the liquid end and adjacent parts of the system.

– Disconnect the pump from the mains power supply and ensure that it cannot be switched on again by unauthorised persons.
– Ensure that the system is at atmospheric pressure before commencing any work on hydraulic parts of the system.

Standard liquid ends:

Interval	Maintenance work	Personnel
Quarterly*	■ Check that the hydraulic lines are fixed firmly to the liquid end. ■ Check that the discharge valve and suction valve are fitted tightly. ■ Check the tightness of the entire liquid end - particularly around the leakage hole - refer to *'Standard liquid ends:' on page 50*! ■ Check that the flow is correct: Allow the pump to prime briefly - turn the multifunctional switch briefly to "Test". ■ Check that the electrical connectors are intact. ■ Check the integrity of the housing. ■ Check that the dosing head screws are tight.	Technical personnel

Interval	Maintenance work	Personnel
Annually*	■ Check the diaphragm for damage - refer to "Repair"	Technical personnel

* Under normal loading (approx. 30% of continuous operation).

Under heavy loading (e.g. continuous operation): Shorter intervals.

** Check the metering diaphragm more frequently with feed chemicals that put particular pressure on the diaphragm, e.g. those containing abrasive additives.

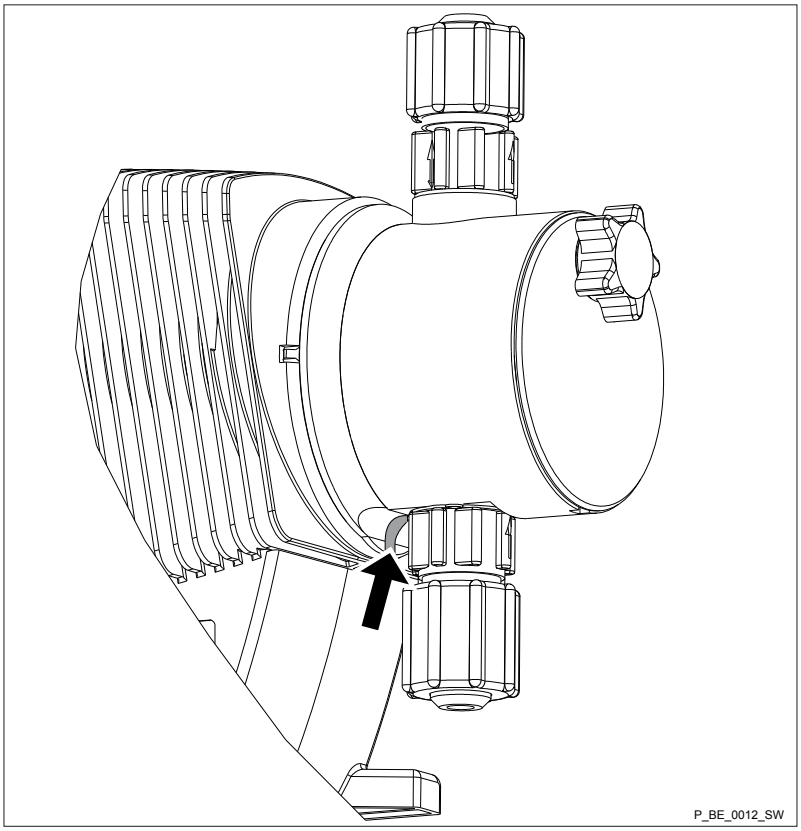

Fig. 40: The leakage hole

Liquid ends with bleed valve:

Interval	Maintenance work
Quarterly*	In addition: ■ Check that the bypass line is fixed firmly to the liquid end. ■ Check that the bleed valve is tight. ■ Check the discharge and bypass line for kinks. ■ Check that the bleed valve is operating correctly.

* Under normal loading (approx. 30 % of continuous operation).

Under heavy loading (e.g. continuous operation): Shorter intervals.

Tightening torque

Data	Value	Unit
Tightening torque for screws:	4.5 ... 5.0	Nm

12 Repair

Safety information



WARNING!

Danger of electric shock

Unauthorised repairs inside the pump may result in an electric shock.

For this reason, only allow a ProMinent branch or representative to perform repairs inside the pump, in particular the following:

- Replacement of damaged mains connection lines
- Replacement of fuses
- Replacement of electronic controller



WARNING!

It is mandatory that you read the safety information and specifications in the "Storage, Transport and Unpacking" chapter prior to shipping the pump.



WARNING!

Contact with the feed chemical

Parts that come into contact with the feed chemical are exposed and touched during repair work.

- Protect yourself against the feed chemical if it is hazardous. Read the material safety data sheet for the feed chemical.



CAUTION!

Warning of feed chemical spraying around

Feed chemical may spray out of the hydraulic components if they are tampered with or opened due to pressure in the liquid end and adjacent parts of the system.

- Disconnect the pump from the mains power supply and ensure that it cannot be switched on again by unauthorised persons.
- Ensure that the system is at atmospheric pressure before commencing any work on hydraulic parts of the system.

12.1 Cleaning valves

Personnel: ■ Technical personnel



Warning of faulty operation

Refer to the exploded drawings in the appendix when working on the unit.

Warning of faulty operation

- *Discharge and suction valves differ from each other! Only take them apart one after the other, so that you do not mix up the components!*
- *Only use new components which fit your valve, both in terms of shape and chemical resistance!*
- *Recalibrate the pump after replacing a valve!*
- *Using an Allen key or similar, insert it into the smaller hole of the pressure connector and push the valve inserts out of it.*

Cleaning a discharge valve or a suction valve for types (PP, PV, NP) 1000, 1605, 1601, 1602

A suction valve is constructed in almost the same way as a discharge valve.

Please note, however, that:

- The two valve inserts are identical here.
- There is an additional spacer between the valve inserts.
- There is a shaped seal in the dosing head instead of an O-ring.
- The flow direction of the suction connector is the opposite to that of the pressure connector.

Cleaning a discharge valve or a suction valve on types (PP, PV, NP) 0708, 1008, 0220, 0420, 0413, 0713, 0232

A suction valve is constructed in almost the same way as a discharge valve.

Please note, however, that:

- The shaped seal is laid in the suction connector.
- Only the O-ring, not the shaped seal, is laid in the dosing head.
- The flow direction of the suction connector is the opposite to that of the pressure connector.

12.2 Replacing the diaphragm

WARNING!
A few cubic centimetres of feed chemical may have accumulated behind the metering diaphragm in the backplate following a leak - depending on the design!

– Take this feed chemical into consideration when you are planning a repair - especially if it is hazardous!

Personnel: ■ Technical personnel

- If necessary take protective measures.
- Adhere to the material safety data sheet for the feed chemical.
- Ensure that the system is at atmospheric pressure.

1. Empty the liquid end (turn the liquid end upside down and allow the feed chemical to run out; flush out with a suitable medium; flush the liquid end thoroughly when using hazardous feed chemicals!)
2. Turn the stroke adjustment dial as far as the stop at 0 % stroke length when the pump is running (the drive axle is then difficult to turn).
3. Switch off the pump.
4. Unscrew the hydraulic connectors on the discharge and suction side.
5. With types with bleed valve: First remove the bleed valve (grip), then lift off the cover of the liquid end with a screwdriver.
6. Remove the screws (1).

For pump types 0220, 0232 and 0420 - refer to the following page (there are 4 holes on the diaphragm edge).

12.2.1 Liquid end types with the exception of 0220 , 0232 and 0420

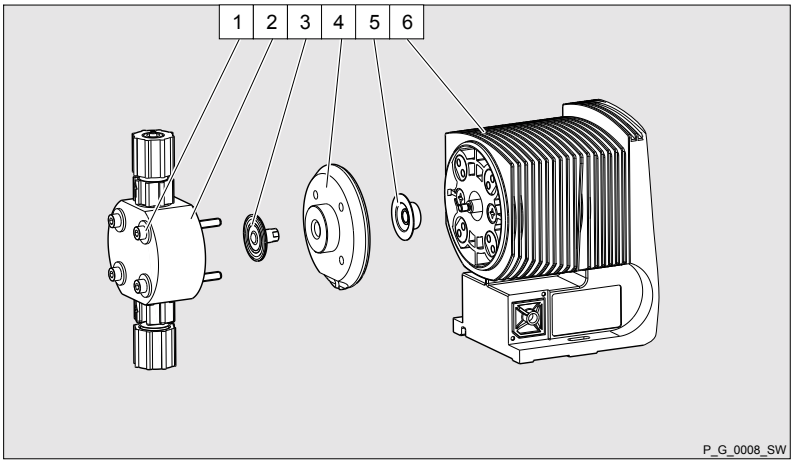

Fig. 41: Partially exploded view of liquid end

1. Loosen the dosing head (2) and the backplate (4) from the pump housing (6) - but only loosen!
2. Hold the pump housing (6) with one hand and clamp the diaphragm (3) with the other hand between the dosing head (2) and the backplate (4).
3. Loosen the diaphragm (3) from the drive axle with a gentle backwards turn of the dosing head (2), diaphragm (3) and backplate (4) in an anticlockwise direction.
4. Unscrew the diaphragm (3) completely from the drive axle.

5. Remove the backplate (4) from the pump housing (6).
6. Check the condition of the safety diaphragm (5) and replace if necessary.
7. Push the safety diaphragm (5) onto the drive axle only until it lies flush with the pump housing (6) and no further!
8. Tentatively screw the new diaphragm (3) onto the drive axle as far as the stop.

   ⇨ The diaphragm (3) is now sitting at the stop of the thread.
9. Should this not work, remove dirt or swarf from the threads and screw the diaphragm (3) onto the drive axle correctly this time.

Ensure that the diaphragm is screwed exactly onto the drive axle otherwise the pump will subsequently not meter accurately!

10. Unscrew the diaphragm (3) again.
11. Place the backplate (4) onto the pump housing (6).

CAUTION!
Leakage may become apparent at a later stage
- Make sure that the leakage hole points downwards when the pump is in its subsequent fitting position - please refer to !
- Place the backplate (4) immediately into the correct position on the pump housing (6)! Do not twist the backplate on the pump housing to prevent the safety diaphragm (5) from becoming warped!

12. Place the diaphragm (3) into the backplate (4).

CAUTION!
Leakage may become apparent at a later stage
- Do not over-tighten the diaphragm (3) in the following step!
- Ensure that the backplate (4) remains in its position so that the safety diaphragm does not become warped!

13. Hold the backplate (4) firmly and screw the diaphragm (3) in a clockwise direction until it is sitting tightly (the twisting resistance of the return spring can be felt).
14. Set the stroke length to 100 %.
15. Place the dosing head (2) with the screws (1) onto the diaphragm (3) and the backplate (4) - ensure that the suction connector points downwards when the pump is in its subsequent fitting position.
16. Gently tighten the screws (1) and then tighten them in a diagonal sequence. See below for the tightening torque.
17. With types with bleed valve: Allow the cover of the liquid end to rest in the dosing head, then press the grip on the bleed valve (grip) into the dosing head.

CAUTION!
Leakage possible
- Check the tightening torque of the screws after 24 hours of operation!
- With PP and PVDF dosing heads, recheck the tightening torque again after three months!

Tightening torque

Data	Value	Unit
Tightening torque for screws:	4.5 ... 5.0	Nm

12.2.2 Liquid end types 0220 , 0232 and 0420

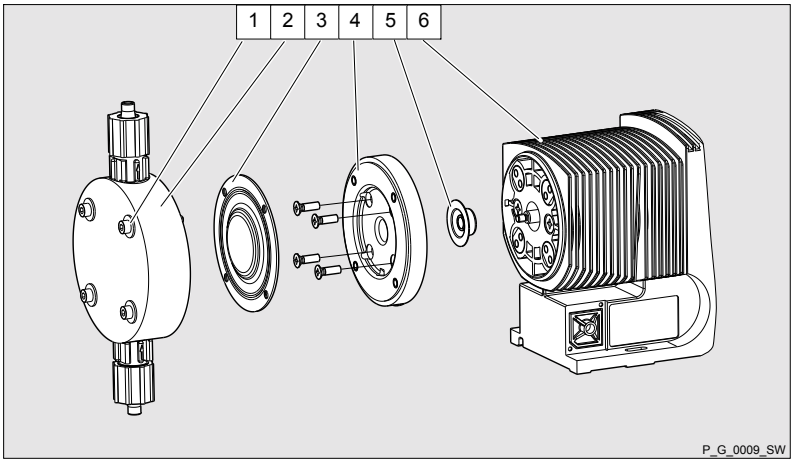

Fig. 42: Partially exploded view of liquid end

1. Remove the dosing head (2) with the screws (1) from the pump.

   Only type 0232: Remove the screws of the backplate (4) under the diaphragm (3). Replace the dosing head (2) and screws - the screws (1) should still extend into the holes in the diaphragm (3), but not into the backplate!

2. Hold the pump housing (6) with one hand and clamp the diaphragm (3) with the other hand between the dosing head (2) and the backplate (4).

3. Loosen the diaphragm (3) from the drive axle with a gentle backwards turn of the dosing head (2), diaphragm (3) and backplate (4) in an anticlockwise direction.

4. Pull the dosing head (2) with the screws (1) out of the diaphragm (3) and completely unscrew this from the drive axle.

5. Remove the backplate (4) from the pump housing (6).

6. Check the condition of the safety diaphragm (5) and replace if necessary.

7. Push the safety diaphragm (5) onto the drive axle only until it lies flush with the pump housing (6) and no further!

8. Tentatively screw the new diaphragm (3) onto the drive axle as far as the stop.

   ⇨ The diaphragm (3) is now sitting at the stop of the thread.

9. Should this not work, remove dirt or swarf from the threads and screw the diaphragm (3) onto the drive axle correctly this time.

   Ensure that the diaphragm is screwed exactly onto the drive axle otherwise the pump will subsequently not meter accurately!

10. Unscrew the diaphragm (3) again.

11. Check whether the diaphragm holes align correctly with the pump housing.

12. If not, start the pump and adjust the stroke length to 100 %.

13. With the pump running, slowly turn the diaphragm (3) clockwise until the 4 diaphragm holes align correctly with the pump housing (6).

14. Clamp the diaphragm (3) in this position, adjust the stroke length to 0 % and stop the pump.

15. Unscrew the diaphragm (3) again.

16. Place the backplate (4) onto the pump housing (6).



CAUTION!

Leakage may become apparent at a later stage

– Make sure that the leakage hole points downwards when the pump is in its subsequent fitting position - please refer to *Further information on page 56*!
– Place the backplate (4) immediately into the correct position on the pump housing (6)! Do not twist the backplate on the pump housing to prevent the safety diaphragm (5) from becoming warped!

17. Only type 0232: Screw the backplate (4) on tightly using the screws.

18. Place the diaphragm (3) into the backplate (4).



CAUTION!

Leakage may become apparent at a later stage

– Do not over-tighten the diaphragm (3) in the following step!
– Ensure that the backplate (4) remains in its position so that the safety diaphragm does not become warped!

19. Hold the backplate (4) firmly and screw the diaphragm (3) in a clockwise direction until it is sitting tightly (the twisting resistance of the return spring can be felt).

20. Place the dosing head (2) with the screws (1) onto the diaphragm (3) and the backplate (4) - ensure that the suction connector points downwards when the pump is in its subsequent fitting position.

21. Gently tighten the screws (1) and then tighten them in a diagonal sequence. Tightening torque - see above.

22. With types with bleed valve: Allow the cover of the liquid end to rest in the dosing head, then press the bleed valve (grip) into the dosing head.



CAUTION!

Leakage possible

– Check the tightening torque of the screws after 24 hours of operation!
– With PP and PVDF dosing heads, recheck the tightening torque again after three months!

13 Troubleshooting

Safety information



WARNING!

Warning of hazardous feed chemical

Should a dangerous feed chemical be used: it may escape from the hydraulic components when working on the pump, material failure or incorrect handling of the pump.

- Take appropriate protective measures before working on the pump (e.g. safety glasses, safety gloves, ...). Adhere to the material safety data sheet for the feed chemical.
- Drain and flush the liquid end before working on the pump.



CAUTION!

Warning of feed chemical spraying around

Feed chemical may spray out of the hydraulic components if they are tampered with or opened due to pressure in the liquid end and adjacent parts of the system.

- Disconnect the pump from the mains power supply and ensure that it cannot be switched on again by unauthorised persons.
- Ensure that the system is at atmospheric pressure before commencing any work on hydraulic parts of the system.

13.1 Faults without error message

Faults without a fault alert

Fault description	Cause	Remedy	Personnel
Pump does not prime in spite of full stroke motion and bleeding	Minor crystalline deposits on the ball seat due to the valves drying out	Take suction hose out of the storage tank and thoroughly flush out the liquid end	Technical personnel
	Major crystalline deposits on the ball seat due to the valves drying out	Dismantle the valves and clean them - refer to "Repair"	Technical personnel
Fluid is escaping from the backplate	The screws in the dosing head are too loose	Tighten the screws in the dosing head crosswise - refer to "Repair" for tightening torque.	Instructed personnel
	The metering diaphragm is not tight	Replace the metering diaphragm - refer to "Repair".	Technical personnel
Green LED display (operating display) does not light up	The wrong mains voltage or no mains voltage is connected.	The specified mains voltage can be found on the nameplate.	Electrician

13.2 Faults with error message

13.2.1 Fault messages

Fault description	Cause	Remedy
The red LED indicator lights up, the identifiers *'Error'* and *'MINIM'* flash on the display.	The fluid level in the storage tank has reached "Liquid level low 2nd stage".	Fill the storage tank.

Fault description	Cause	Remedy
The red LED indicator lights up, the identifiers *'Error'* and *'ANALG'* flash on the display.	The pump control is in *'Analog'* operating mode, a fault behaviour has been programmed in the *'ANALG'* menu and the control current has fallen below 3.8 mA.	Eliminate the cause of the low control current. Switch the programming of the fault behaviour to *'OFF'* - see chapter "Setting - Operating mode settings (SET menu)".
The red LED indicator lights up, the identifiers *'Error'* and *'CNTCT'* flash on the display.	Pump control is in *'Contact'* or *'Batch'* operating mode and the function extension "Memory" has been set. A very large factor was also set, too many contacts have been received or *[P]* has been pressed too often: Consequently a stroke memory overflow has occurred!	Press *[P]* to clear the memory content. Set up the pump again.
The red LED indicator lights up, the identifiers *'Error'* and *'FLOW'* flash on the display.	Metering monitor not correctly connected.	Connect the metering monitor correctly. Press the *[P]* key.
	The metering monitor reported more defective strokes than was set in the *'FLOW'* menu.	Press the *[P]* key. Investigate and clear the cause.
The red LED indicator lights up, the identifiers *'Error'* and *'SYSTEM'* flash on the display.	Fault on the control.	Disconnect the pump from the mains/power supply then reconnect. If the error message continues to appear, then return the pump to ProMinent.
The red LED indicator lights up, the identifiers *'Error'* and *'MEM'* flash on the display.	Stroke memory overflow has occurred.	Eliminate causes. Press *[P]* key - bear in mind the consequences for your process.

13.2.2 Warning messages

Fault description	Cause	Remedy
Green LED indicator illuminates.	The liquid level in the storage tank has reached "liquid level low 1st stage".	Fill storage tank.
Green LED indicator illuminates and the identifier *'Calib'* flashes.	The pump is calibrated and the stroke length varies by more than ±10 scale divisions from the value at the time of the calibration.	Reset the stroke length or recalibrate the pump at the desired stroke length.

13.3 All other faults

Please contact the responsible ProMinent branch or representative!

14 Decommissioning and disposal

14.1 Decommissioning



WARNING!

Danger from chemical residue

There is normally chemical residue in the liquid end and on the housing after operation. This chemical residue could be hazardous to people.

- It is mandatory that the safety information in the "Storage, transport and unpacking" chapter is read before shipping or transport.
- Thoroughly clean the liquid end and the housing of chemicals and dirt. Adhere to the material safety data sheet for the feed chemical.



WARNING!

Warning of hazardous feed chemical

Should a dangerous feed chemical be used: it may escape from the hydraulic components when working on the pump, material failure or incorrect handling of the pump.

- Take appropriate protective measures before working on the pump (e.g. safety glasses, safety gloves, ...). Adhere to the material safety data sheet for the feed chemical.
- Drain and flush the liquid end before working on the pump.



CAUTION!

Warning of feed chemical spraying around

Feed chemical may spray out of the hydraulic components if they are tampered with or opened due to pressure in the liquid end and adjacent parts of the system.

- Disconnect the pump from the mains power supply and ensure that it cannot be switched on again by unauthorised persons.
- Ensure that the system is at atmospheric pressure before commencing any work on hydraulic parts of the system.



Danger of damage to the unit

Take into account the information in the "Storage, transport and unpacking" chapter if the system is decommissioned for a temporary period.

1. Disconnect the pump from the mains/power supply.
2. Drain the liquid end by turning the pump upside down and allowing the feed chemical to run out.
3. Flush the liquid end with a suitable medium; flush the dosing head thoroughly when using hazardous feed chemicals!

14.2 Disposal

CAUTION!

Environmental hazard due to incorrect disposal

There are components in the pump, which can have a toxic effect on the environment.

– Note the pertinent regulations currently applicable in your country!

Sign indicating EU collection system

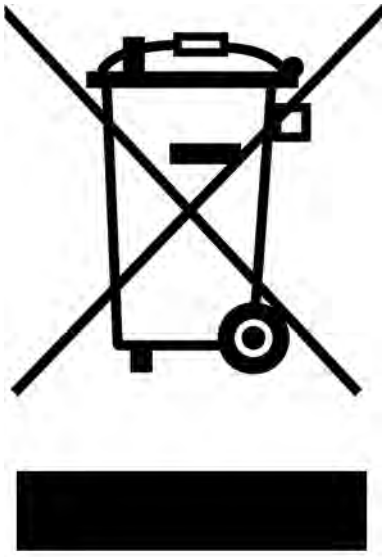

In accordance with the European Directive 2012/19/EU on waste electrical and electronic equipment, this device features the symbol showing a waste bin with a line through it. The device must not be disposed of along with domestic waste. To return the device, use the return and collection systems available and observe the local legal requirements.

15 Technical data

15.1 Performance data

Concept L operating at 180 strokes/minute and 100 % stroke length

Type	Minimum pump capacity at maximum back pressure			Minimum pump capacity at medium back pressure			Connector size Outer ∅ x inner ∅	Suction lift*	Priming lift**	Maximum priming pressure on suction side
	bar	l/h	ml/ stroke	bar	l/h	ml/ stroke	mm	m water column	m water column	bar
Concept L										
1000	10	0.74	0.069	5.0	0.82	0.076	6x4	6.0	1.8	8
1601	16	1.1	0.10	8.0	1.40	0.13	6x4	6.0	2.0	8
1602	16	2.1	0.190	8.0	2.5	0.24	6x4	6.0	2.5	5.5
1604	16	3.6	0.33	8.0	4.3	0.40	6x4	5.0	3.0	3
0708	7	7.1	0.66	3.5	8.4	0.78	8x5	4.0	2.0	2
0413	4	12.3	1.14	2.0	14.2	1.31	8x5	3.0	2.5	1.5
0220	2	19.0	1.76	1.0	20.9	1.94	12x9	2.0	2.0	1
1008	10	6.8	0.63	5.0	8.3	0.76	8x5	3.0	3.0	2
0713	7	11.0	1.02	3.5	13.1	1.21	8x5	3.0	3.0	1.5
0420	4	17.1	1.58	2.0	19.1	1.77	12x9	3.0	3.0	1
0232	2	32.0	2.96	1.0	36.2	3.35	12x9	2.0	2.0	0.8
Concept L metering pumps with self-bleeding dosing head SER* **										
1602	10	1.40	0.13	8.0	1.74	0.16	6x4	-	1.8	0.5
1604	10	2.7	0.25	8.0	3.6	0.33	6x4	-	1.8	0.5
0708	7	6.60	0.61	3.5	7.50	0.69	8x5	-	1.8	0.5
0413	4	10.8	1.0	2.0	12.6	1.17	8x5	-	1.8	0.5
0220	2	16.2	1.5	1.0	18.0	1.67	12x9	-	1.8	0.5
1008	10	6.3	0.58	5.0	7.5	0.69	8x5	-	1.8	0.5
0713	7	10.5	0.97	3.5	12.3	1.14	8x5	-	1.8	0.5
0420	4	15.6	1.44	2.0	17.4	1.61	12x9	-	1.8	0.5

* - Suction lift with a filled suction line and filled liquid end. With self-bleeding dosing head with air in the suction line.

** - Priming lift with clean and moist valves. Priming lift at 100 % stroke length and free outlet or opened bleed valve.

*** - The given performance data constitutes guaranteed minimum values, calculated using water as the medium at room temperature.

15.2 Precision

15.2.1 Standard liquid end

Data	Value	Unit
Capacity range of the product range	-5 ... +10	% *
Reproducibility	±2	% **

* - With max. stroke length and max. operating pressure for all material versions

** - Under constant conditions and at least 30 % stroke length

15.3 Viscosity

The liquid ends are suitable for the following viscosity ranges:

Design	Range	Unit
Standard	0 ... 200	mPas
With valve springs	200 ... 500	mPas

* Only when the installation is correctly adjusted.

15.4 Material specifications

Standard liquid ends

Design	Dosing head	Suction/pressure connector	Seals	Valve balls
PPE	Polypropylene	Polypropylene	EPDM	Ceramic
PPB	Polypropylene	Polypropylene	FKM	Ceramic
NPE	Clear acrylic	PVC	EPDM	Ceramic
NPB	Clear acrylic	PVC	FKM	Ceramic
PVT	PVDF	PVDF	PTFE	Ceramic
SST	Stainless steel 1.4404	Stainless steel 1.4404	PTFE	Ceramic

Only the self-bleeding design in material version PPE, PPB, NPE and NPB: Valve spring made of Hastelloy C, valve insert made of PVDF.

Diaphragm: with PTFE coating.

Pump

Housing parts: Polyphenylene ether (PPE with fibreglass)

15.5 Electrical data

Version: 100 - 230 V ±10 %, 50/60 Hz, Concept L CPLa

Parameter	M70	M85
Nominal power, approx.	17 W	23 W
Current I eff	0.5 ... 0.2 A	0.8 ... 0.3 A
Peak current	3.6... 1.4 A	6.0 ... 2.8 A

Parameter	M70	M85
Switch on peak current (within approx. 1 ms)	15 A	15 A
Fuse*	1.6 slow blow	1.6 slow blow

* Fuses must have VDE, UL and CSA certification. e.g. *[Schurter type SPT®]* (0001.2506), order no. 732411

Version: 12 - 24 VDC§ -8/+24 %, Concept L CPLa, identity code M

Parameter	M70**
Nominal power, approx.	17 W
Nominal current (averaged at 180 H/min)	3.1 ... 1.4 A
Peak current	10.2... 4.3 A
Closed current (no stroke)	128 ... 70 mA
Fuse*	5 slow blow

§ SELV in accordance with EN 60335-1

* 5 AT, 5x20 mm, order no. 712028

** M70: 1000, 1601, 1602, 1005, 0708, 0413, 0220

The pump only works if the polarity is correct.

Version: 24 VDC§ -15/+24 %, Concept L CPLa, identity code N

Parameter	M85**
Nominal power, approx.	20 W
Nominal current (averaged at 180 H/min)	1.8 A
Peak current	6.0 A
Closed current (no stroke)	70 mA
Fuse*	5 slow blow

§ SELV in accordance with EN 60335-1

* 5 AT, 5x20 mm, order no. 712028

** M85: 1605, 1008, 0713, 0420, 0232

The pump only works if the polarity is correct.

15.6 Temperatures

Tab. 9: Pump, fully assembled

Specification	Value
Storage and transport temperature:	-10 ... +50 °C
Ambient temperature in operation (power end/drive and control):	-10 ... +45 °C

Liquid end

Material version	Long term	Temporary *
PP	50 °C	100 °C
NP	40 °C	60 °C
PV	40 °C	120 °C
SS	50 °C	120 °C

* Temp. max., for 15 min at max. 2 bar, dependent on the ambient and feed chemical temperatures

15.7 Climate

Data	Value	Unit
Maximum air humidity*:	95	% relative humidity

*non-condensing

Test: Humid heat, cyclical,

in accordance with EN 680068-2-30: 2005

15.8 Altitude of site

Data	Value	Unit
Altitude of site , max.:	2000	m above NHN

15.9 Degree of Protection and Safety Requirements

Degree of protection

Protection against accidental contact and humidity:

IP 65 according to DIN EN 60529

Safety requirements

Degree of protection:

1 - mains power connection with protective earth conductor

15.10 Compatibility

Some hydraulic parts of the Concept L are identical to those of the product range Beta®.

There is substantial compatibility of the following components and accessories to pumps in the product ranges Beta®:

- Control cable 5-wire for the "External" function
- Level switch 2-stage (Beta®)
- Metering line cross-sections
- Standard connector kit
- Wall bracket
- Dosing tanks and fixing plates
- Overall height (distance between the suction and pressure connector)

- Distance between the connectors and the pump fixing holes
- Identical use of accessories, such as back pressure valves, multifunctional valves, metering monitor and flushing assembly

15.11 Shipping weight

Shipping weight of Concept L types - in kg

Types				
	1000, 1601, 1602	0708, 0413, 0220	1008, 0713	0420, 0232
PP, NP, PV	2.9	3.1	4.5	5.5
SS	3.6	4.5	5.9	8.6

15.12 Sound pressure level

Sound pressure level

Sound pressure level LpA < 70 dB according to EN ISO 20361

at maximum stroke length, maximum stroke rate, maximum back pressure (water)

16 Dimensional drawings

- *Compare the dimensions on the dimensional drawing with those of the pump.*
- *All dimensions are in mm.*

Dimensional drawing Concept L, material versions PPE, PPB

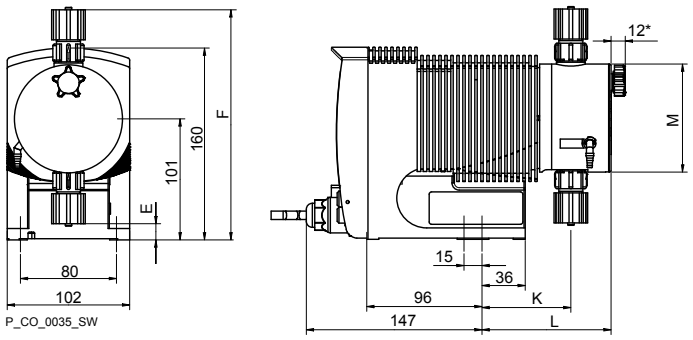

Fig. 43: Dimensional drawing Concept L, material version PPE, PPB - dimensions in mm

	Concept L M70				Concept L M85			
	1000 - 1602	1005	0708 - 0413	220	1605	1008 - 0713	420	232
E	23	13	15	15	13	15	15	5
F	186	193	191	191	193	191	191	197
K	71	71	74	76	71	74	76	76
R	106	105	108	110	105	108	110	91
M	Ø 70	Ø 90	Ø 90	Ø 90	Ø 90	Ø 90	Ø 90	Ø 110

Dimensional drawing Concept L, material versions NPE, NPB (without bleed valve)

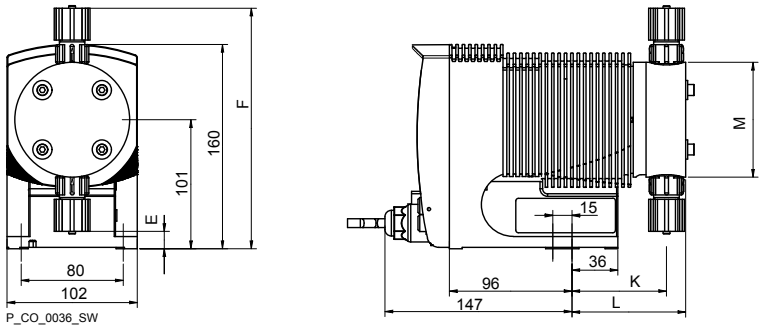

Fig. 44: Dimensional drawing Concept L, material versions NPE, NPB (without bleed valve) - dimensions in mm

	Concept L M70					Concept L M85			
	1000 - 1601	1602	1005	708	0413 - 0220	1605	1008 - 0713	420	232
E	25	23	16	15	15	16	15	15	5
F	177	179	188	189	189	188	189	189	199
K	77	77	74	74	76	74	74	76	76
R	92	92	89	89	91	89	89	91	91
M	62 (Ø 70)	66 (Ø 70)	Ø 90	Ø 90	Ø 90	Ø 90	Ø 90	Ø 90	Ø 110

Dimensional drawing Concept L, material versions NPE, NPB (with bleed valve)

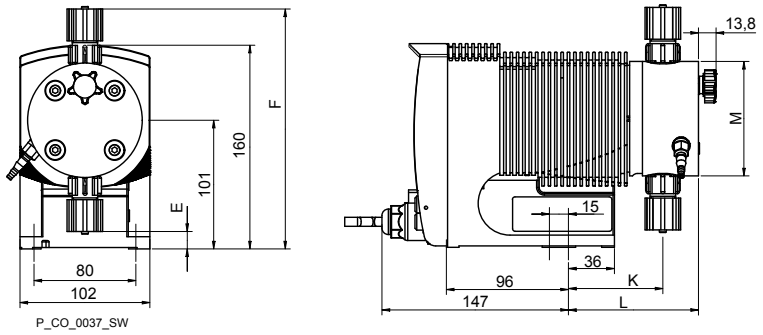

Fig. 45: Dimensional drawing Concept L, material versions NPE, NPB (with bleed valve) - dimensions in mm

	Concept L M70					Concept L M85			
	1000 - 1601	1602	1005	708	0413 - 0220	1605	1008 - 0713	420	232
E	25	23	16	13	15	16	13	15	5
F	177	179	188	189	189	188	189	189	199
K	77	77	74	74	76	74	74	76	76
R	105	105	102	102	104	102	102	104	105
M	62 (Ø 70)	66 (Ø 70)	Ø 90	Ø 90	Ø 90	Ø 90	Ø 90	Ø 90	Ø 110

Dimensional drawing Concept L, material version PVDF

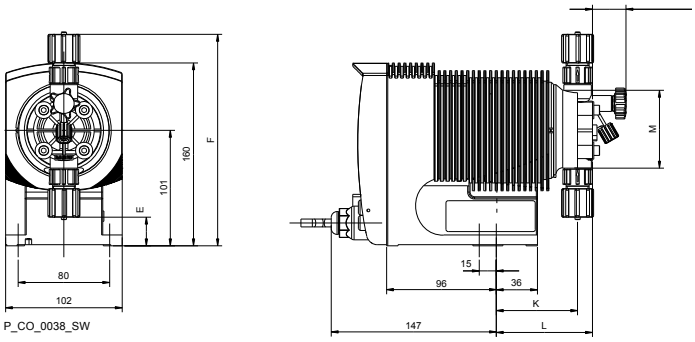

Fig. 46: Dimension drawing Concept L, material version PVDF - dimensions in mm

	Concept L M70				Concept L M85			
	1000 - 1602	1005	0708 - 0413	220	1605	0408 - 0713	420	232
E	25	14	14	14	14	14	14	4
F	185	191	191	191	191	191	191	198
K	71	71	73	75	71	73	75	76
R	84	88	90	92	88	90	92	93
M	Ø 70	Ø 90	Ø 90	Ø 90	Ø 90	Ø 90	Ø 90	Ø 90

Dimensional drawing of Concept L, material version SST

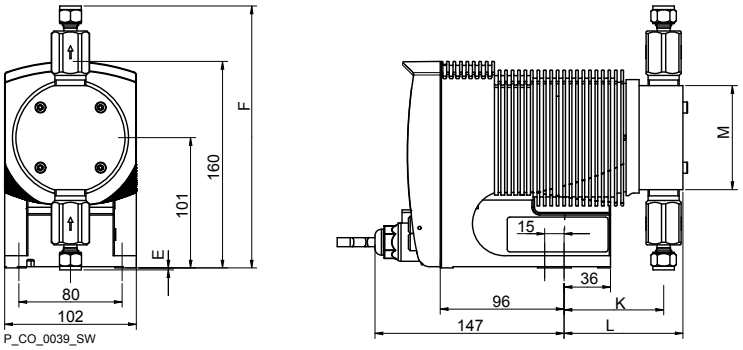

Fig. 47: Dimension drawing Concept L, material version SST - dimensions in mm

	Concept L M70					Concept L M85			
	1000 - 1601	1602	1005	0708 -0413	220	1605	1008 - 0713	420	232
E	40	33	31	-2	-3	31	-2	-3	-10
F	162	170	171	203	204	171	203	204	212
K	78	72	75	77	77	75	77	77	78
R	89	85	88	93	93	88	93	93	95
M	51 (Ø 60)	66 (Ø 70)	68 (Ø 80)	81 (Ø 85)	81 (Ø 85)	81 (Ø 80)	81 (Ø 85)	81 (Ø 85)	96 (Ø 100)

17 Exploded views of liquid ends

Liquid end Concept L 1000 - 1604 PP with bleed valve

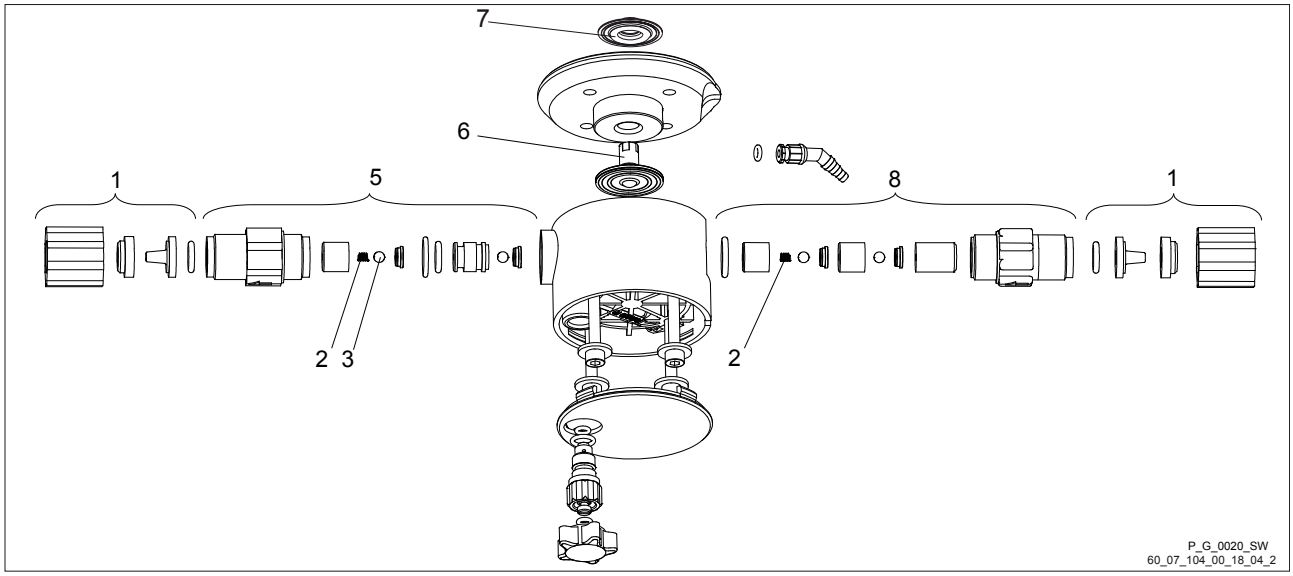

Fig. 48: Liquid end Concept L 1000 - 1604 PP with bleed valve

Pos.	Designation	Type 1000	Type 1601	Type 1602	Type 1604
1	Connector kit 6/4 PPE	817150	817150	817150	817150
1	Connector kit 8/5 PPE	-	-	-	-
1	Connector kit 6/4 PPB	817166	817166	817166	817166
1	Connector kit 8/5 PPB	-	-	-	-
2 *	Spring	469406	469406	469406	469406
3	4 valve balls	404201	404201	404201	404201
4	Bleed valve	1021662	1021662	1021662	1021662
5	Discharge valve complete PPE	740350	740350	740350	740350
5	Discharge valve complete PPB	740351	740351	740351	740351
6	Diaphragm	1000244	1000245	1000246	1000247
7	Safety diaphragm	1027414	1027414	1027414	1027414
8	Suction valve complete PPE	792644	792644	792644	792644
8	Suction valve complete PPB	792646	792646	792646	792646

*** Special accessory. The other items listed are included in the spare parts kit. Technical changes reserved.**

Liquid end Concept L 0708(1008) - 0220 (0420) PP with bleed valve

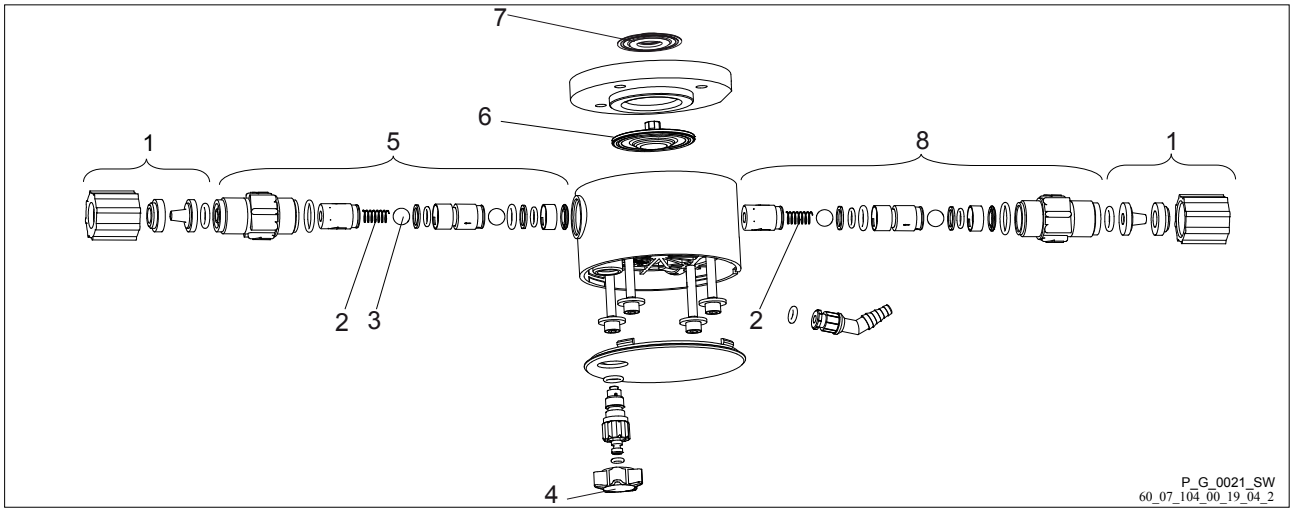

Fig. 49: Liquid end Concept L 0708(1008) - 0220 (0420) PP with bleed valve

Pos.	Designation	Type 0708 (1008)	Type 0413 (0713)	Type 0220 (0420)
1	Connector kit 8/5 PPE	817153	817153	-
1	Connector kit 12/9 PPE	-	-	817151
1	Connector kit 8/5 PPB	817167	817167	-
1	Connector kit 12/9 PPB	-	-	817168
2 *	Spring	469403	469403	469403
3	4 valve balls	404281	404281	404281
4	Bleed valve	1021662	1021662	1021662
5	Discharge valve complete PPE	1001441	1001441	1001441
5	Discharge valve complete PPB	1001440	1001440	1001440
6	Diaphragm	1000248	1000249	1000250
7	Safety diaphragm	1027414	1027414	1027414
8	Suction valve complete PPE	1001437	1001437	1001437
8	Suction valve complete PPB	1001436	1001436	1001436

*** Special accessory. The other items listed are included in the spare parts kit. Technical changes reserved.**

Liquid end Concept L 0232 PP without bleed valve

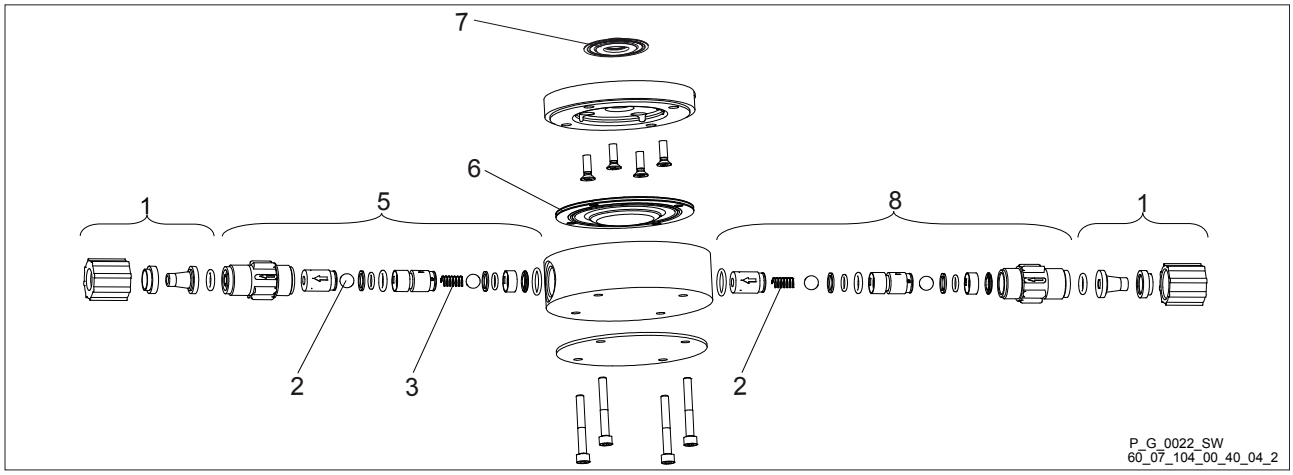

Fig. 50: Liquid end Concept L 0232 PP without bleed valve

Pos.	Designation	Type 0232
1	Connector kit 12/9 PPE	817151
1	Connector kit 12/9 PPB	817168
2 *	Spring	469403
3	4 valve balls	404281
5	Discharge valve complete PPE	1001441
5	Discharge valve complete PPB	1001440
6	Diaphragm	1000251
7	Safety diaphragm	1027414
8	Suction valve complete PPE	1001437
8	Suction valve complete PPB	1001436
*** Special accessory. The other items listed are included in the spare parts kit. Technical changes reserved.**		

Liquid end Concept L 1000 - 1604 NP with and without bleed valve

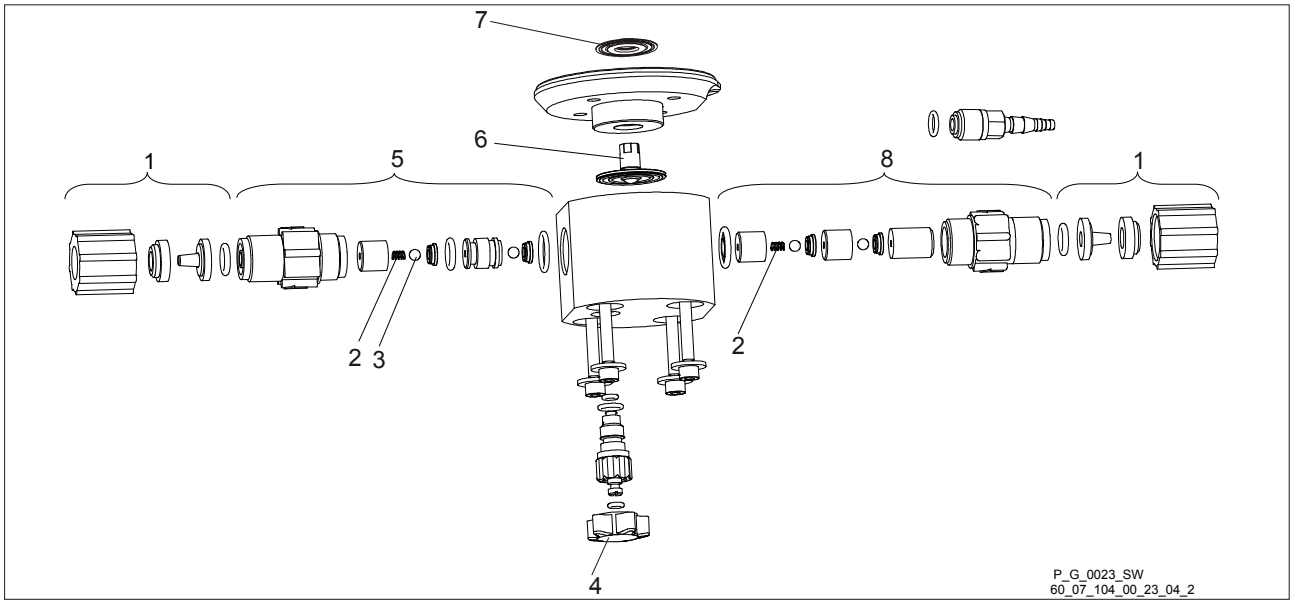

Fig. 51: Liquid end Concept L 1000 - 1604 NP with and without bleed valve

Pos.	Designation	Type 1000	Type 1601	Type 1602	Type 1604
1	Connector kit 6/4 PCE	817060	817060	817060	817060
1	Connector kit 8/5 PCE	-	-	-	-
1	Connector kit 6/4 PCB	817050	817050	817050	817050
1	Connector kit 8/5 PCB	-	-	-	-
2 *	Spring	469406	469406	469406	469406
3	4 valve balls	404201	404201	404201	404201
4	Bleed valve	1021662	1021662	1021662	1021662
5	Discharge valve complete PCE	740349	740349	740349	740349
5	Discharge valve complete PCB	740348	740348	740348	740348
6	Diaphragm	1000244	1000245	1000246	1000247
7	Safety diaphragm	1027414	1027414	1027414	1027414
8	Suction valve complete PCE	792119	792119	792119	792119
8	Suction valve complete PCB	792026	792026	792026	792026

*** Special accessory. The other items listed are included in the spare parts kit. Technical changes reserved.**

Liquid end Concept L 0708 (1008) - 0220 (0420) NP with and without bleed valve

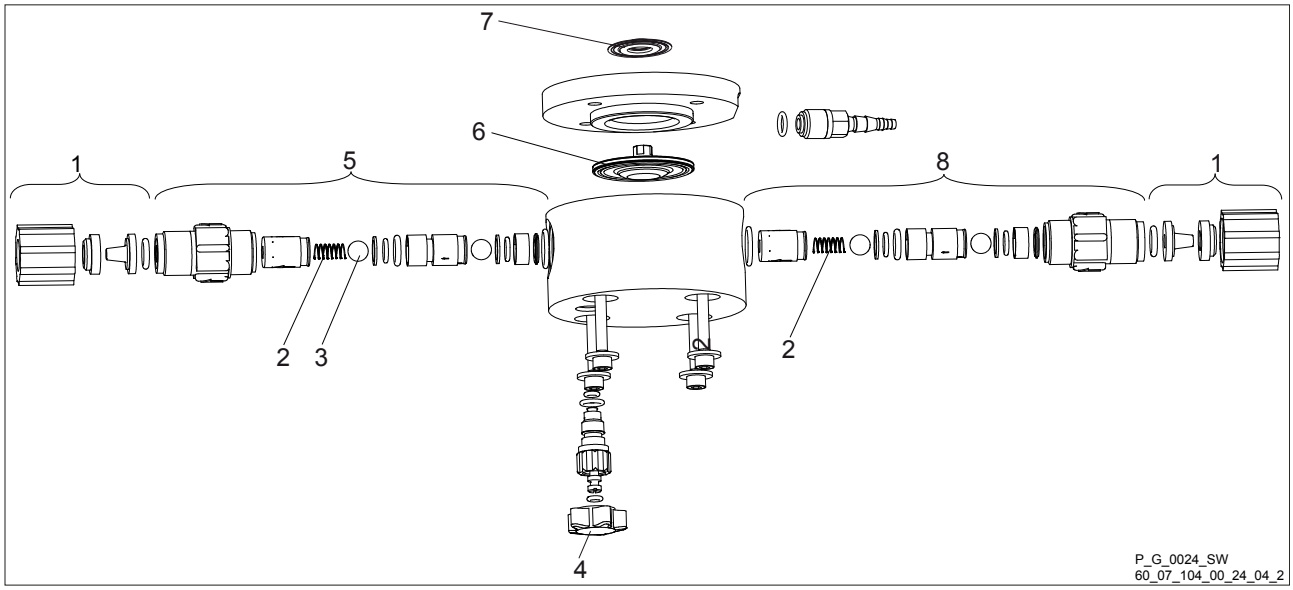

Fig. 52: Liquid end Concept L 0708 (1008) - 0220 (0420) NP with and without bleed valve

Pos.	Designation	Type 0708 (1008)	Type 0413 (0713)	Type 0220 (0420)
1	Connector kit 8/5 PCE	817048	817048	-
1	Connector kit 12/9 PCE	-	-	817049
1	Connector kit 8/5 PCB	817053	817053	-
1	Connector kit 12/9 PCB	-	-	817051
2 *	Spring	469403	469403	469403
3	4 valve balls	404281	404281	404281
4	Bleed valve	1021662	1021662	1021662
5	Discharge valve complete PCE	1001439	1001439	1001439
5	Discharge valve complete PCB	1001438	1001438	1001438
6	Diaphragm	1000248	1000249	1000250
7	Safety diaphragm	1027414	1027414	1027414
8	Suction valve complete PCE	1001435	1001435	1001435
8	Suction valve complete PCB	1001434	1001434	1001434

*** Special accessory. The other items listed are included in the spare parts kit. Technical changes reserved.**

Liquid end Concept L 0232 NP with and without bleed valve

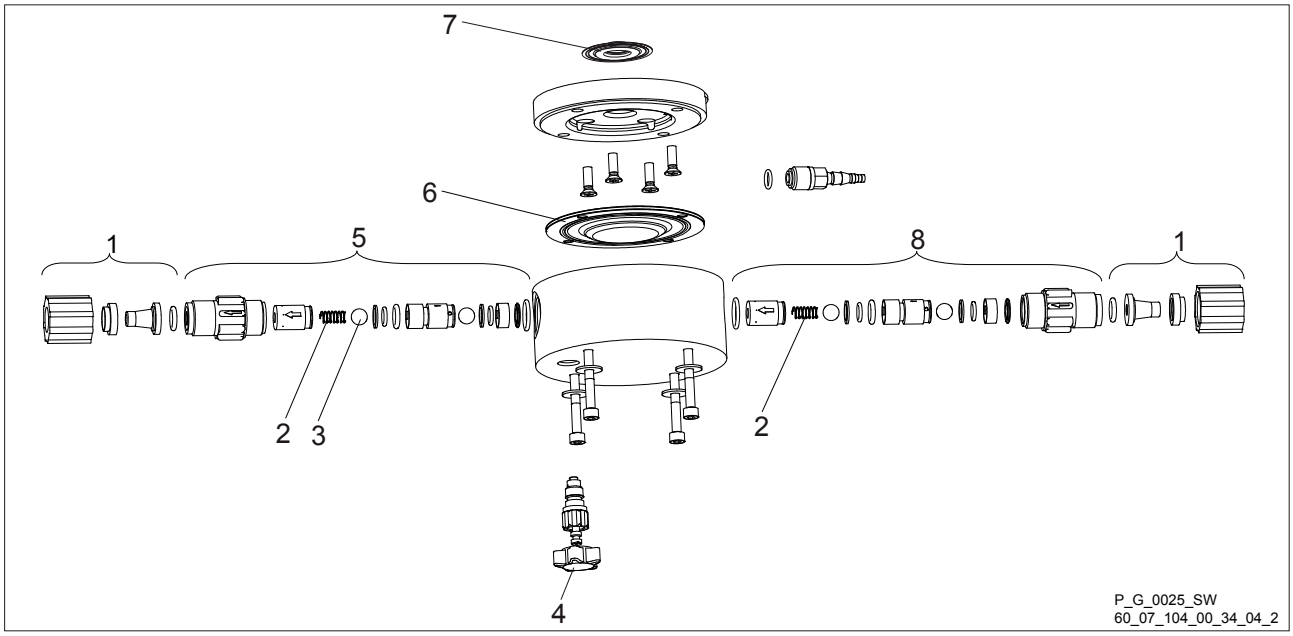

Fig. 53: Liquid end Concept L 0232 NP with and without bleed valve

Pos.	Designation	Type 0232
1	Connector kit 12/9 PCE	817049
1	Connector kit 12/9 PCB	817051
2 *	Spring	469403
3	4 valve balls	404281
5	Discharge valve complete PCE	1001439
5	Discharge valve complete PCB	1001438
6	Diaphragm	1000251
7	Safety diaphragm	1027414
8	Suction valve complete PCE	1001435
8	Suction valve complete PCB	1001434
*** Special accessory. The other items listed are included in the spare parts kit. Technical changes reserved.**		

Liquid end Concept L 1000 - 1604 PVT with bleed valve

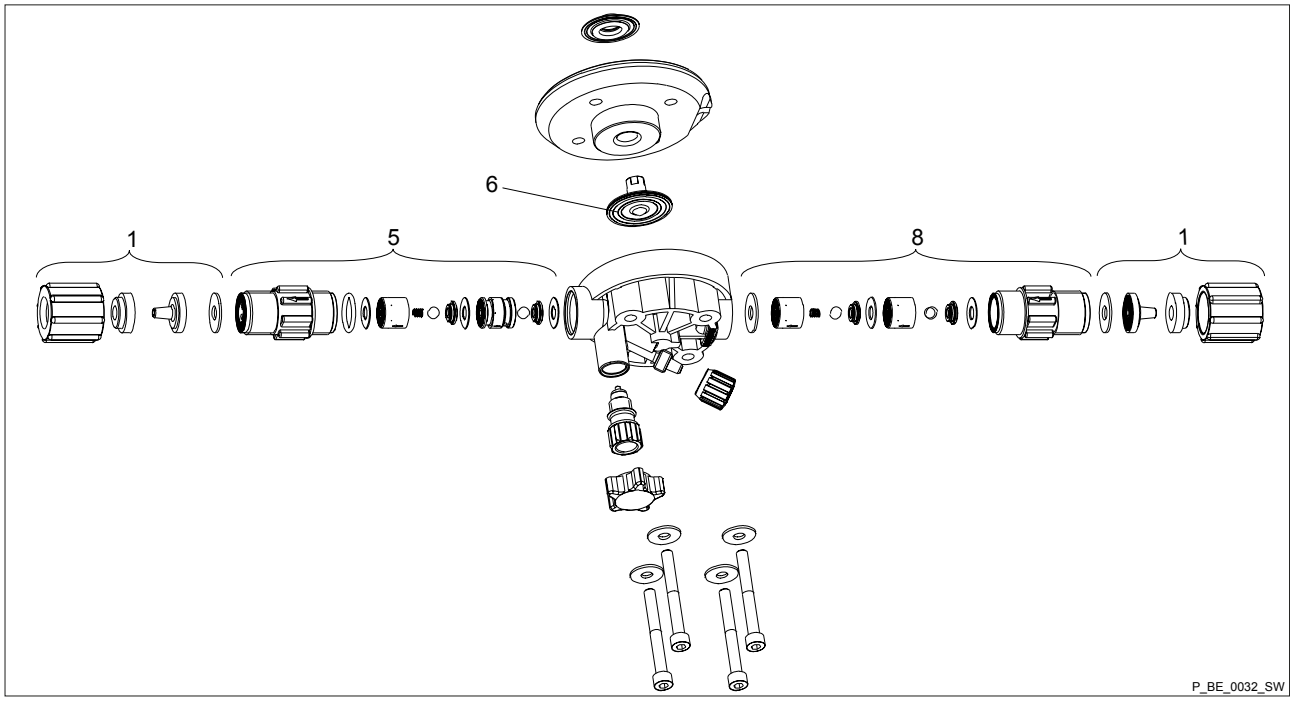

Fig. 54: Liquid end Concept L 1000 - 1604 PVT with bleed valve

Pos.	Designation	Type 1000	Type 1601	Type 1602	Type 1604
1	Connector kit 6/4 PVT	1023246	1023246	1023246	-
1	Connector kit 8/5 PVT	-	-	-	1023247
2 *	Spring	469406	469406	469406	469406
3	4 valve balls	404281	404281	404281	404281
4	Bleed valve	1021662	1021662	1021662	1021662
5	Discharge valve, complete 9.2-2 PVT	1023247	1023247	1023247	1023247
6	Diaphragm	1000244	1000245	1000246	1000247
7	Safety diaphragm	1027414	1027414	1027414	1027414
8	Suction valve, complete 9.2-2 PVT	1023126	1023126	1023126	1023126

*** Special accessory. The other items listed are included in the spare parts kit. Technical changes reserved.**

Liquid end Concept L 0708(1008) - 0220 (0420) PV with bleed valve

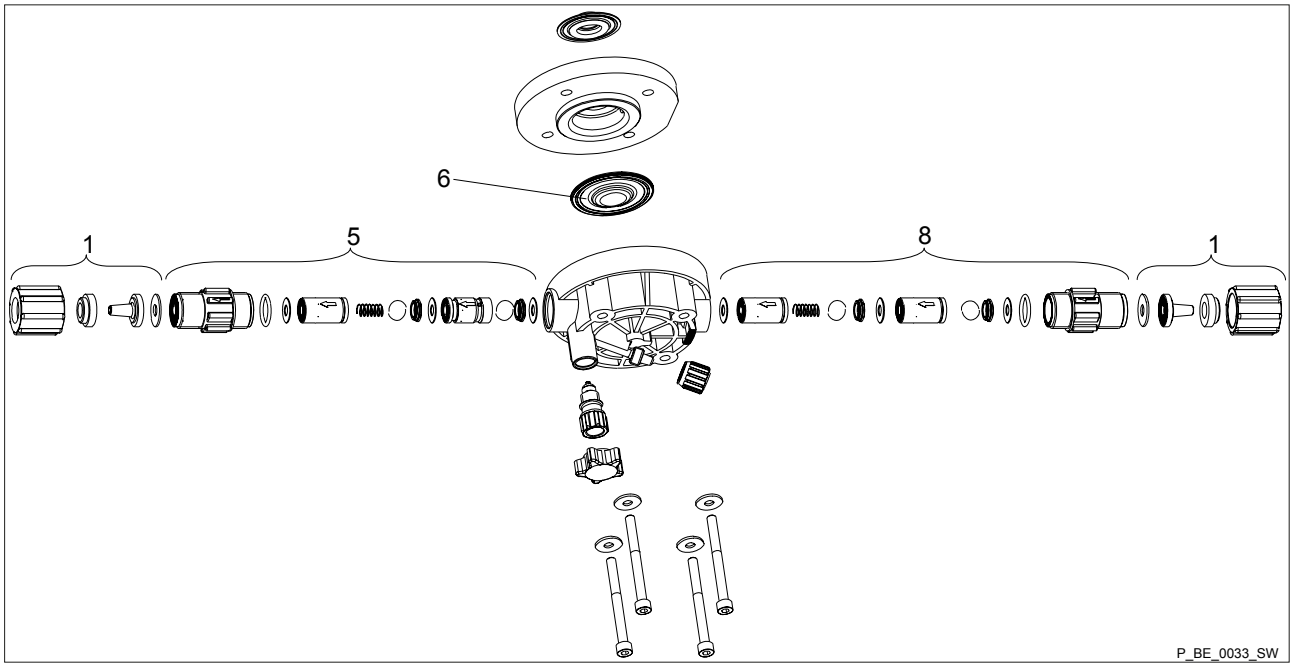

Fig. 55: Liquid end Concept L 0708(1008) - 0220 (0420) PV with bleed valve

Pos.	Designation	Type 0708 (1008)	Type 0413 (0713)	Type 0220 (0420)
1	Connector kit 8/5 PVT	1023247	1023247	-
1	Connector kit 12/9 PVT	-	-	1023248
2 *	Spring	469403	469403	469403
3	4 valve balls	404281	404281	404281
4	Bleed valve	1021662	1021662	1021662
5	Discharge valve, complete 9.2-2 PVT	1023125	1023125	1023125
6	Diaphragm	1000248	1000249	1000250
7	Safety diaphragm	1027414	1027414	1027414
8	Suction valve, complete 9.2-2 PVT	1023126	1023126	1023126

*** Special accessory. The other items listed are included in the spare parts kit. Technical changes reserved.**

Liquid end Concept L 0232 PV without bleed valve

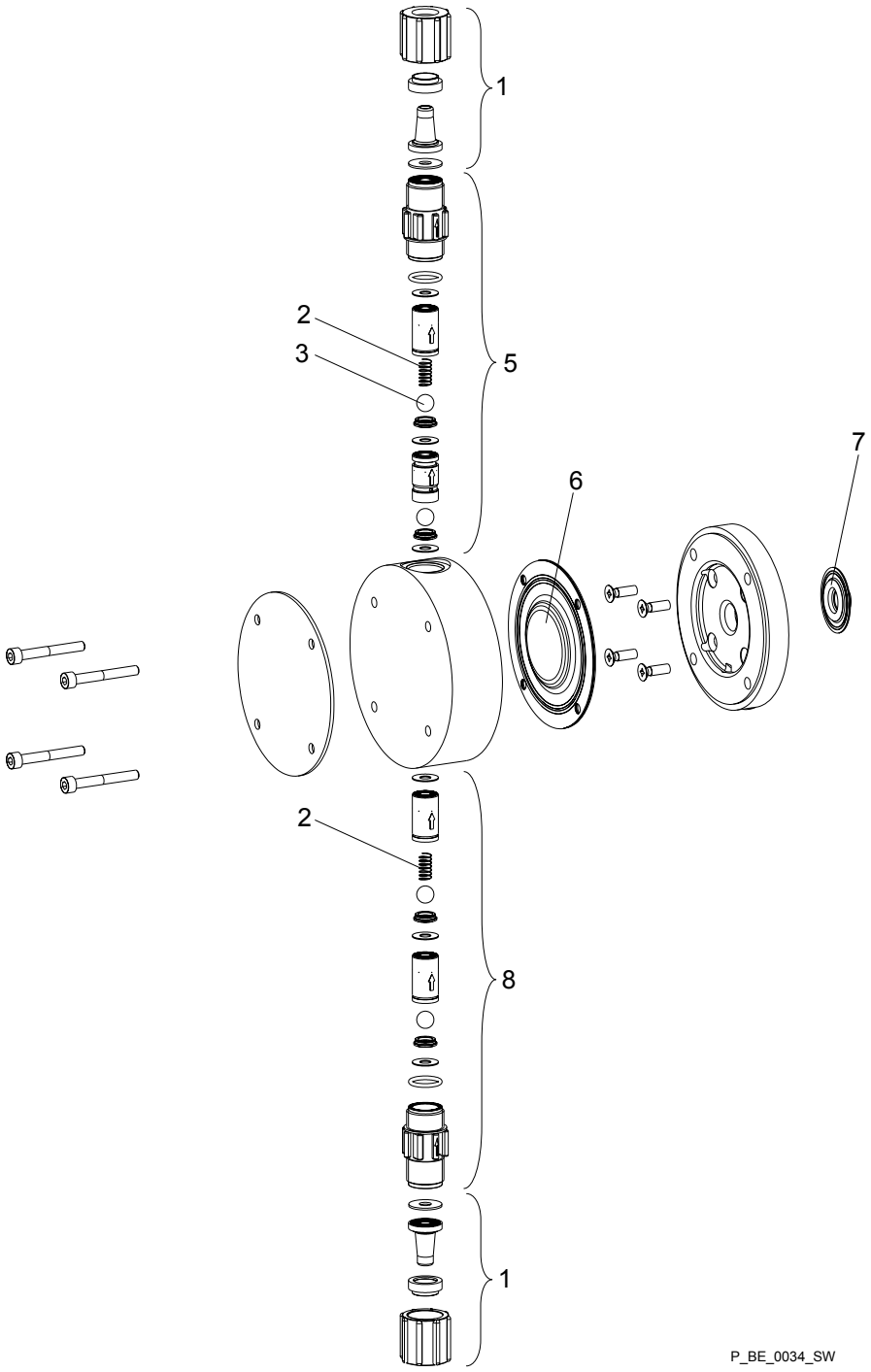

Fig. 56: Liquid end Concept L 0232 PV without bleed valve

Pos.	Designation	Type 0232
1	Connector kit 12/9 PVT	1023248
2 *	Spring	469403
3	4 valve balls	404281
5	Discharge valve, complete 9.2-2 PVT	1023125
6	Diaphragm	1000251
*** Special accessory. The other items listed are included in the spare parts kit. Technical changes reserved.**		

Pos.	Designation	Type 0232
7	Safety diaphragm	1027414
8	Suction valve, complete 9.2-2 PVT	1023126
* Special accessory. The other items listed are included in the spare parts kit. Technical changes reserved.		

Liquid end Concept L 1000 - 1604 SST

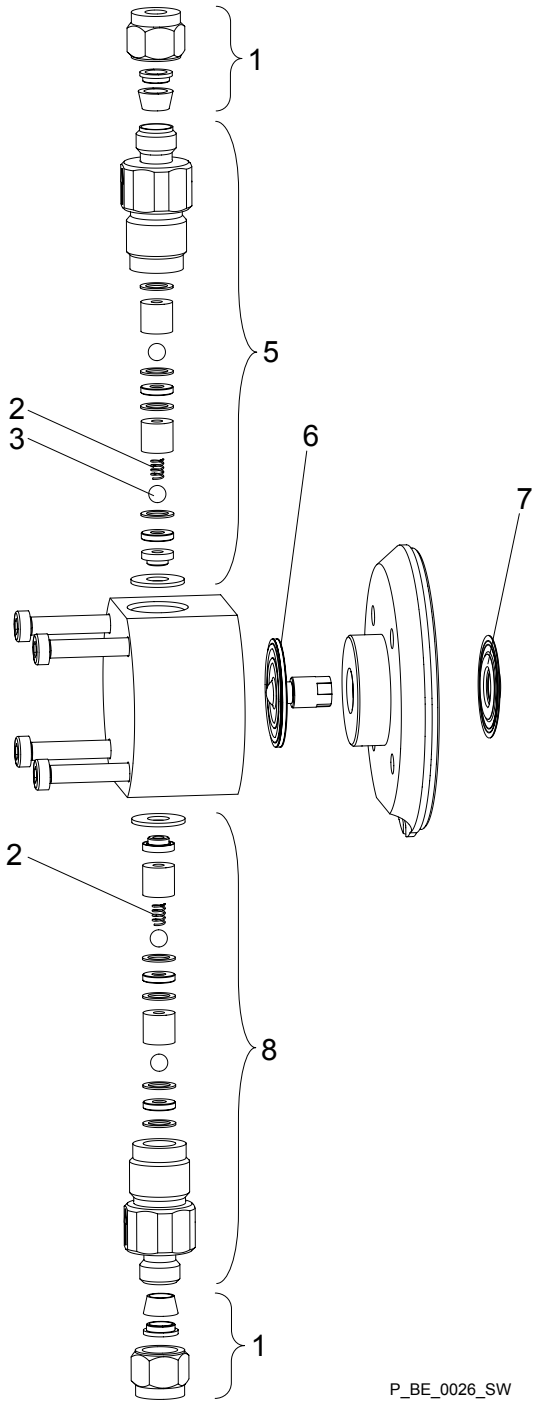

Fig. 57: Liquid end Concept L 1000 - 1604 SST

Pos.	Designation	Type 1000	Type 1601	Type 1602	Type 1602
1	Connector kit 6 mm SS	104233	104233	104233	104233
2 *	Spring	469406	469406	469406	469406
3	4 valve balls	404201	404201	404201	404201
5	Discharge valve complete 6 mm SST	809418	809418	809418	809418
6	Diaphragm	1000244	1000245	1000246	1000247
*** Special accessory. The other items listed are included in the spare parts kit. Technical changes reserved.**					

Pos.	Designation	Type 1000	Type 1601	Type 1602	Type 1602
7	Safety diaphragm	1027414	1027414	1027414	1027414
8	Suction valve complete 6 mm SST	809419	809419	809419	809419
* Special accessory. The other items listed are included in the spare parts kit. Technical changes reserved.					

Liquid end Concept L 0708 (1008) - 0220 (0420) SST

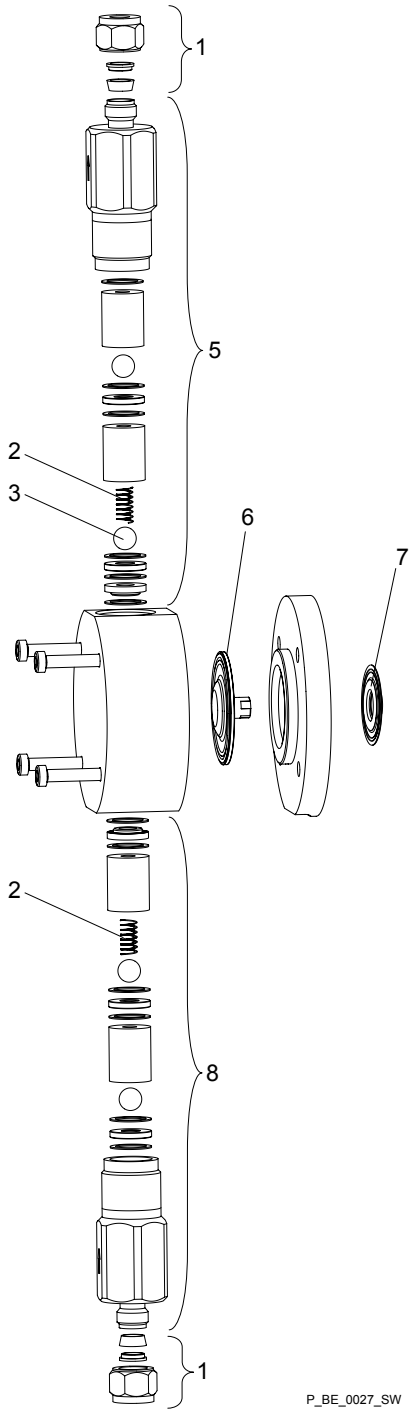

Fig. 58: Liquid end Concept L 0708 (1008) - 0220 (0420) SST

Pos.	Designation	Type 0708 (1008)	Type 0413 (0713)	Type 0220 (0420)
1	Connector kit 8 mm SS	104237	104237	-
1	Connector kit 12 mm SS	-	-	104245
2 *	Spring	469403	469403	469403
3	4 valve balls	404281	404281	404281
5	Discharge valve complete 8 mm SST	809494	809494	-
***Special accessory. The other items listed are included in the spare parts kit. Technical changes reserved.**				

Pos.	Designation	Type 0708 (1008)	Type 0413 (0713)	Type 0220 (0420)
5	Discharge valve complete 12 mm SST	-	-	809446
6	Diaphragm	1000248	1000249	1000250
7	Safety diaphragm	1027414	1027414	1027414
8	Suction valve complete 8 mm SST	809495	809495	-
8	Suction valve complete 12 mm SST	-	-	809447
*Special accessory. The other items listed are included in the spare parts kit. Technical changes reserved.				

Liquid end Concept L 0232 SST

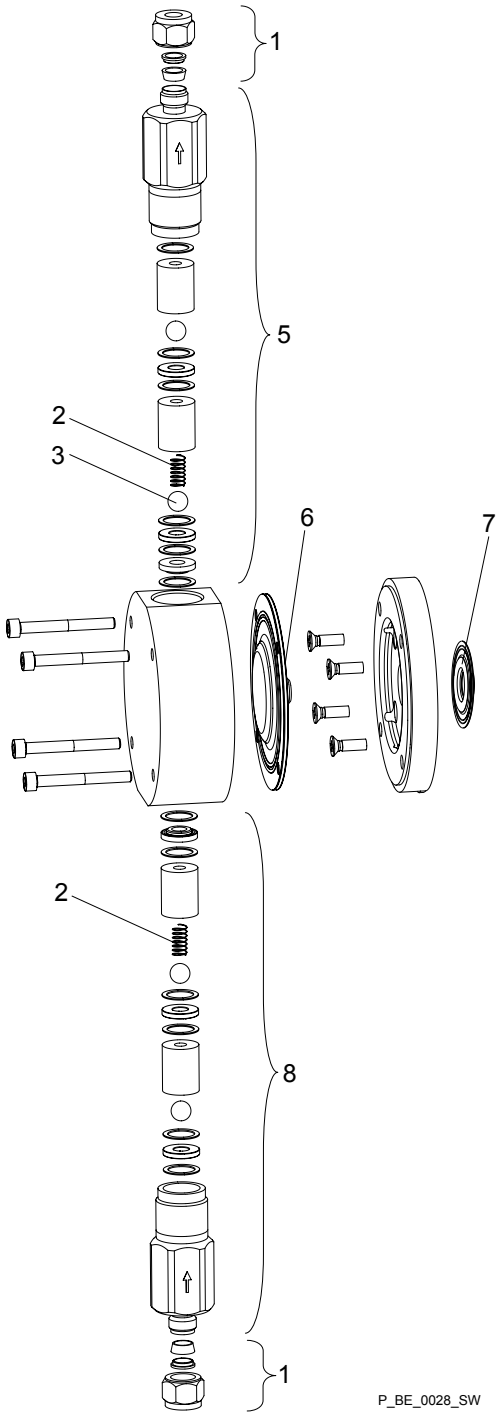

Fig. 59: Liquid end Concept L 0232 SS

Pos.	Designation	Type 0232
1	Connector kit 12 mm SS	104245
2 *	Spring	469403
3	4 valve balls	404281
5	Discharge valve complete 12 mm SST	809446
6	Diaphragm	1000251
*** Special accessory. The other items listed are included in the spare parts kit. Technical changes reserved.**		

Pos.	Designation	Type 0232
7	Safety diaphragm	1027414
8	Suction valve complete 12 mm SST	809447
* Special accessory. The other items listed are included in the spare parts kit. Technical changes reserved.		

18 Ordering information

Spare parts kits for SER types (without bypass)

Type	PVT7
1602	1047830
1604	1047858
0708 (1008)	1047832
0413 (0713)	1047833
0220 (0420)	1047837

Spare parts kits for other types

Type	PPE	PPB	NPE	NPB	PVT	SS
1000	1001644	1001652	1001713	1001721	1023107	1001729
1601	1001645	1001653	1001714	1001722	1023108	1001730
1602	1001646	1001654	1001715	1001723	1023109	1001731
1604	1039989	1039987	1039988	1039986	1035332	1035331
0708 (1008)	1001648	1001656	1001717	1001725	1023111	1001733
0413 (0713)	1001649	1001657	1001718	1001726	1023112	1001734
0220 (0420)	1001650	1001658	1001719	1001727	1023113	1001735
0232	1001651	1001659	1001720	1001728	1023124	1001736

Sealing sets for other types

Type	PPE	PPB	NPE	NPB	PVT	SS
1000, 1601, 1602, 1604	1001775	1001773	1001775	1001773	1023130	483907 *
0708 (1008) 0413 (0713) 0220 (0420)	1001776	1001774	1001776	1001774	1023130	483975
0232	1001651	1001659	1001776	1001774	1023129	483975
* 11-part						

Relay

Product	Part no.
Fault indicating relay:	1002526
Fault indicating/pacing relay:	1002528

Interference suppression aids

Product	Part no.
Varistor:	710912
RC member, 0.22 µF / 220 Ω:	710802

Further sources of information

Further information on spare parts, accessories and options can be found in:

- the exploded drawings
- the identity code
- in www.prominent.com
- the ProMinent product catalogue

19 Diagrams for adjusting the capacity - CPLa

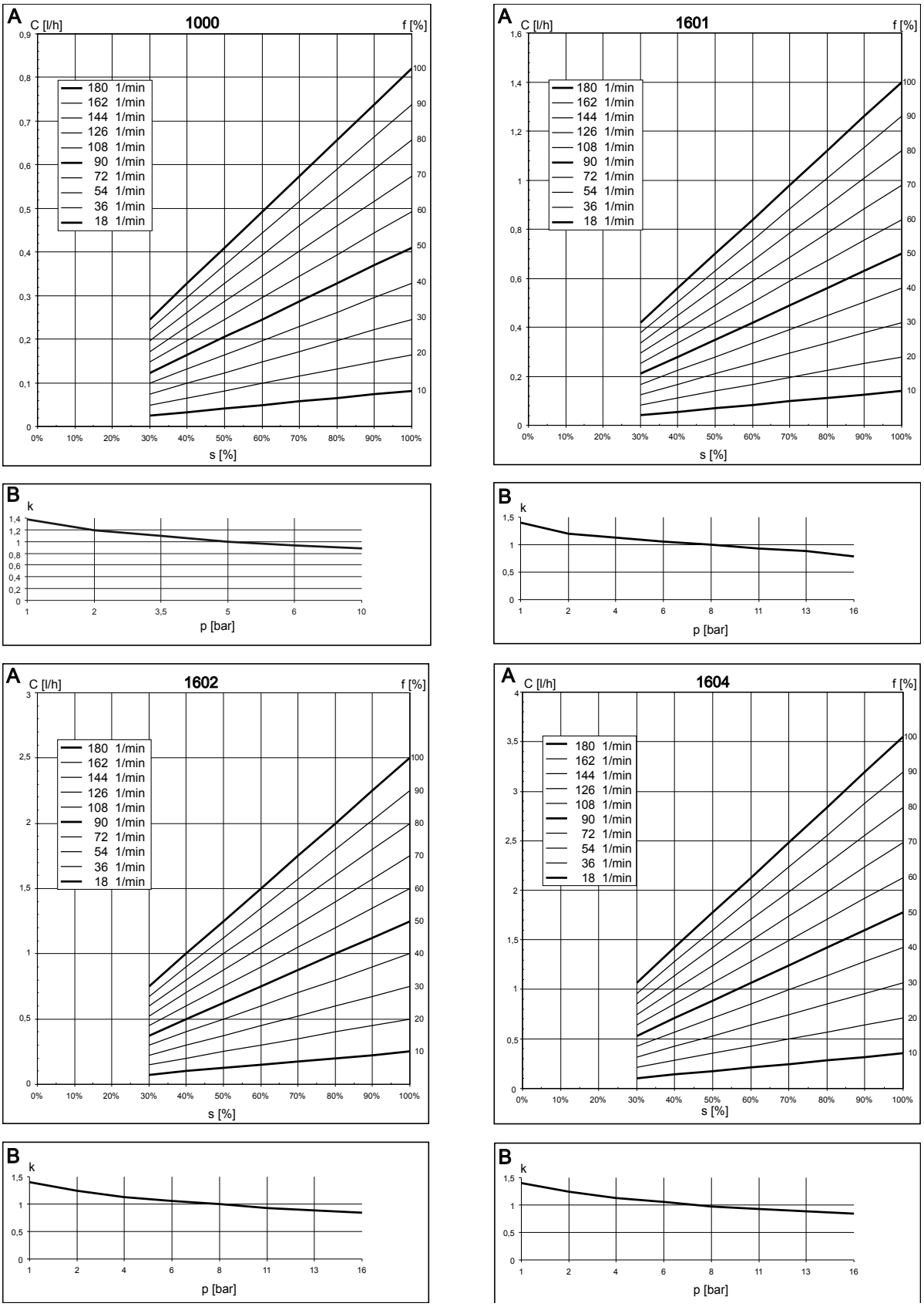

Fig. 60: A) Capacity C for medium back pressure dependent on the stroke length s for different stroke rates f. B) Corresponding correction factors k dependent on back pressure p

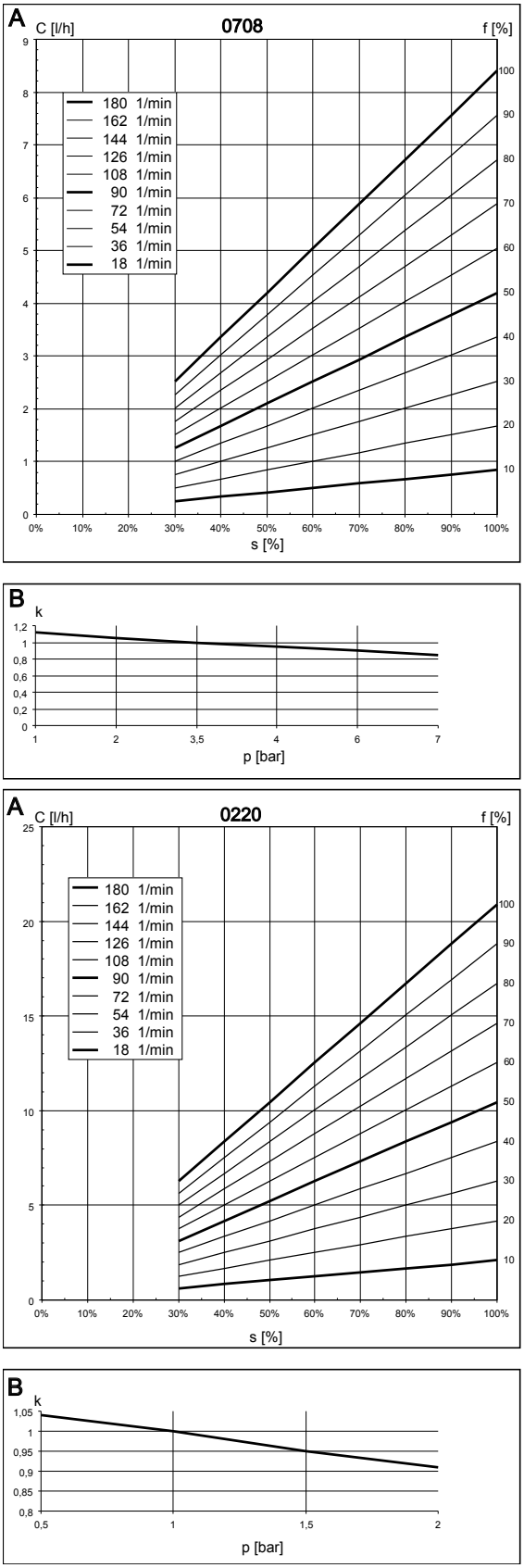

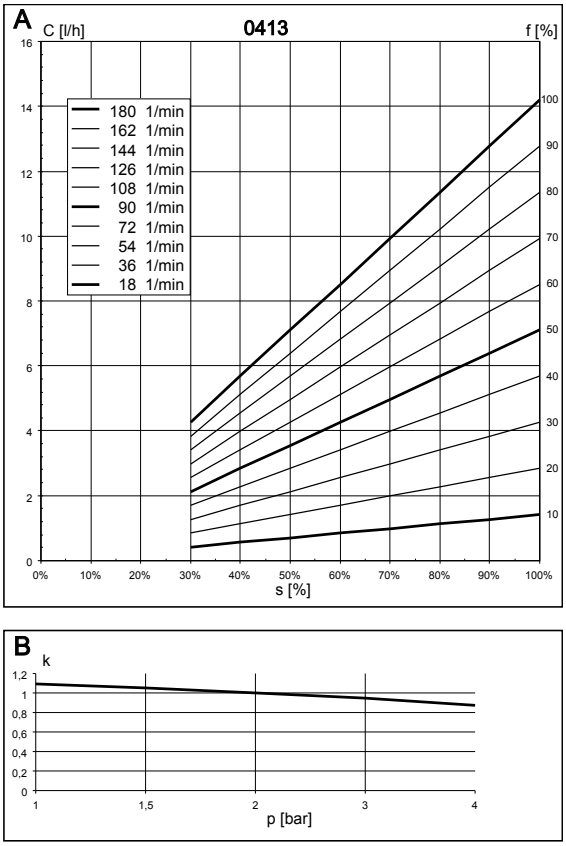

Fig. 61: A) Capacity C for medium back pressure dependent on the stroke length s for different stroke rates f. B) Corresponding correction factors k dependent on back pressure p

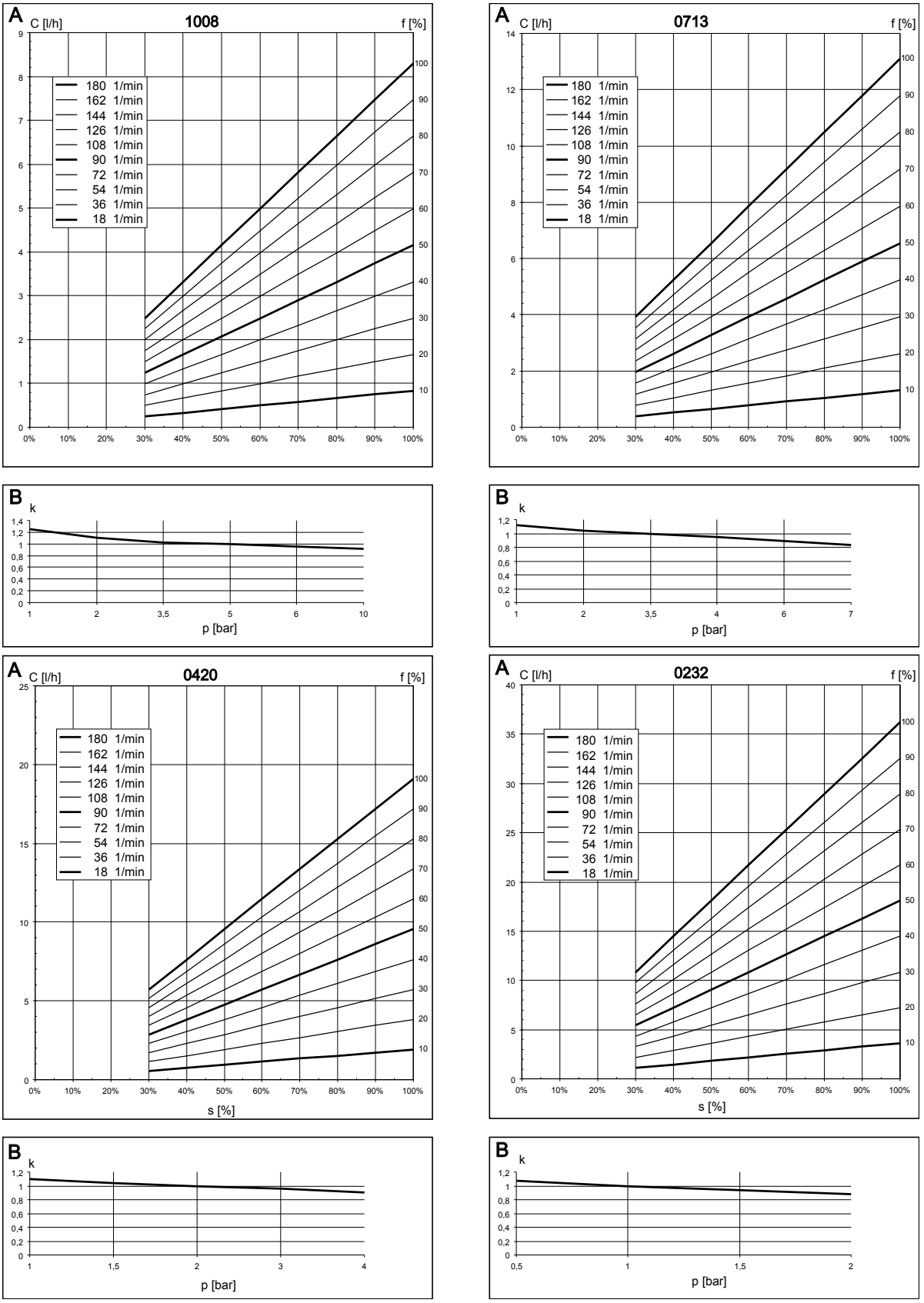

Fig. 62: A) Capacity C for medium back pressure dependent on the stroke length s for different stroke rates f. B) Corresponding correction factors k dependent on back pressure p

20 Declaration of Conformity

In accordance with DIRECTIVE 2006/42/EC OF THE EUROPEAN PARLIAMENT AND OF THE COUNCIL, Appendix I, BASIC HEALTH AND SAFETY REQUIREMENTS, section 1.7.4.2. C.

We,

- ProMinent GmbH
- Im Schuhmachergewann 5 - 11
- D - 69123 Heidelberg, Germany,

hereby declare that the product specified below complies with the relevant basic health and safety requirements of the EC Directive on the basis of its functional concept and design and in the version marketed by us.

Any modification to the product not approved by us invalidates this declaration.

Tab. 10: Excerpt from the Declaration of Conformity

Designation of the product:	Metering pump, product range Concept/ L CPLa
Product type:	CPLa _ _ _ _ _ _ _ _ _ _ _ _ _ _ _ U _ _ _ _ _
Serial number:	see nameplate on the unit
Relevant EC Directives:	Machinery Directive (2006/42/EC) The protection targets of the Low Voltage Directive (2014/35/EU) were complied with in accordance with Appendix I, No. 1.5.1 of the Machinery Directive 2006/42/EC EMC Directive (2014/30/EU) RoHS Directive (2011/65/EU)
Harmonised standards applied, in particular:	EN ISO 12100:2010 EN 809:1998 + A1:2009 + AC:2010 EN 61010-1:2010 EN 61000-6-2:2005 EN 61000-6-3:2007 + A1:2011 EN 63000:2018
Date:	01.09.2020

Download the Declaration of Conformity at www.prominent.com.

21 Operating / set-up overview

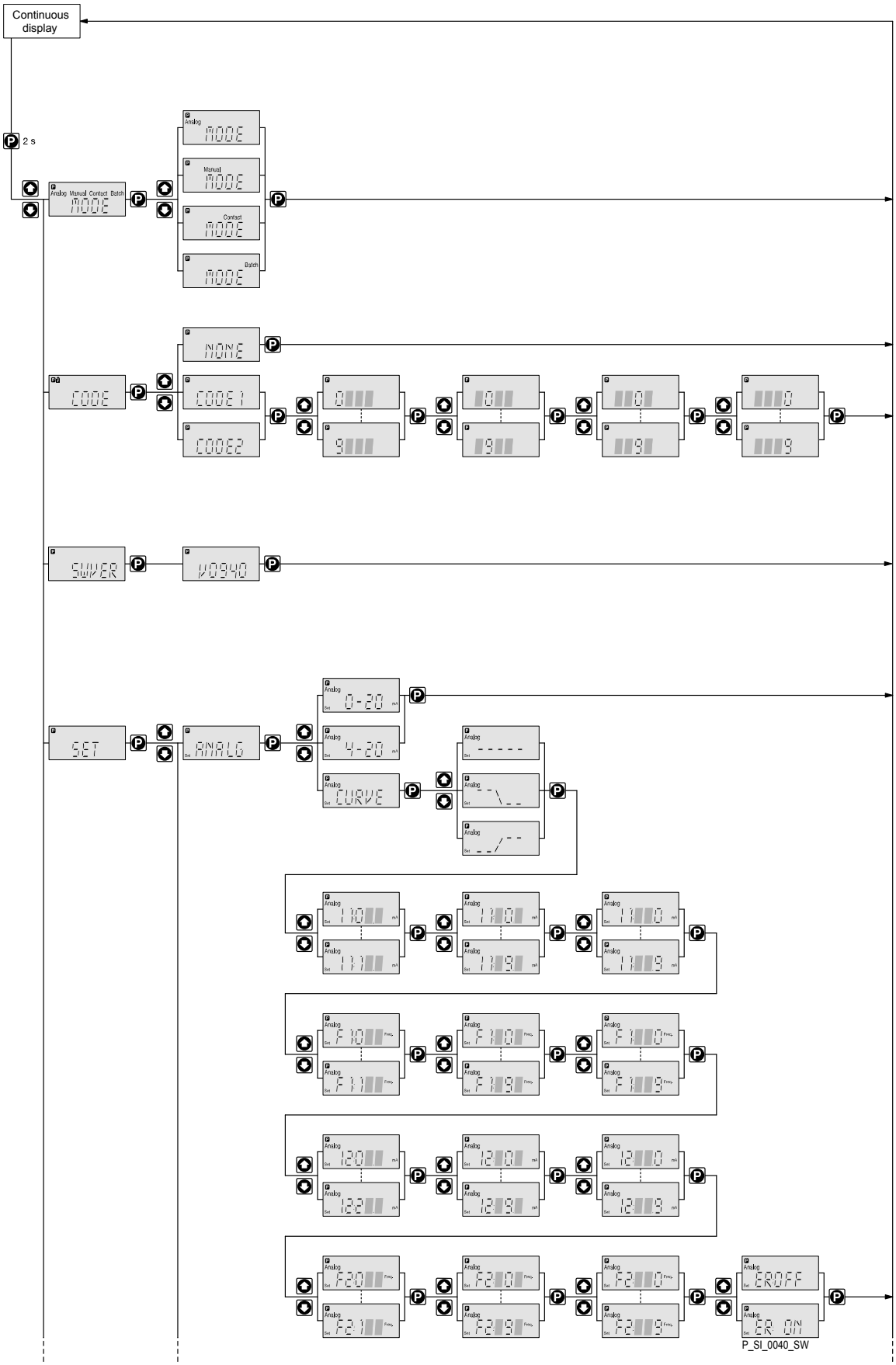

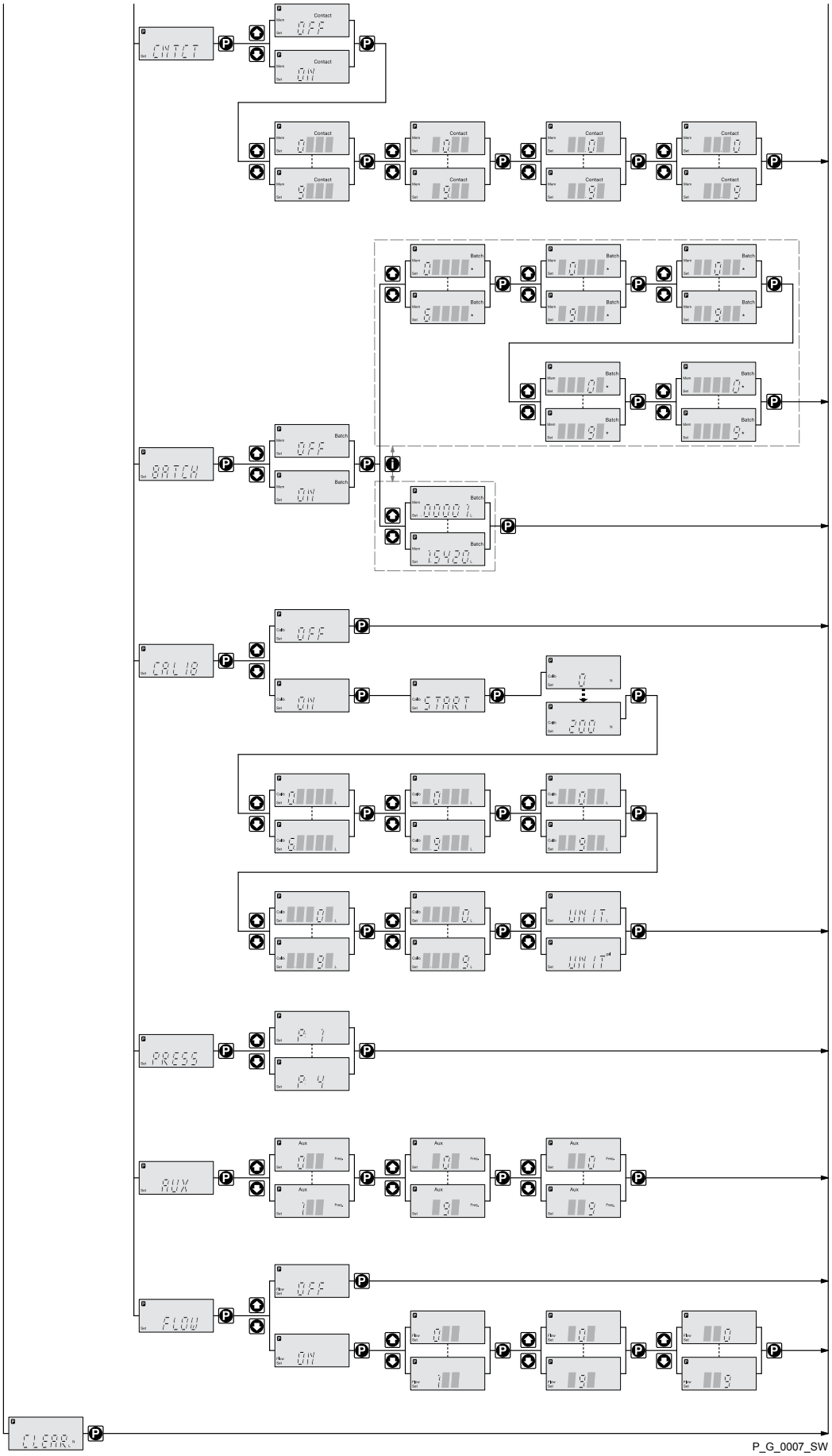
CONTCT
Contact
OFF
ON
BATCH
Batch
OFF
ON
CALIB
START
UNIT
PRESS
AUX
FLOW
CLEAR
P_G_0007_SW

22 Continuous displays

Continuous displays

Continuous display	"Analog" operating mode 0...20 mA	"Manual" operating mode	"Contact" operating mode with memory and transfer factor 5	"Batch" operating mode with memory
Stroke rate	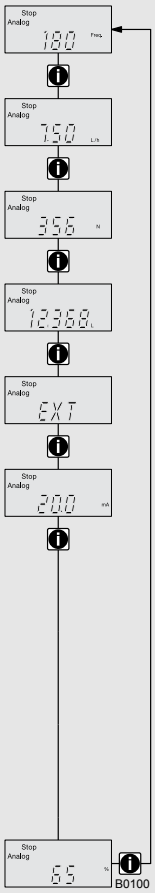	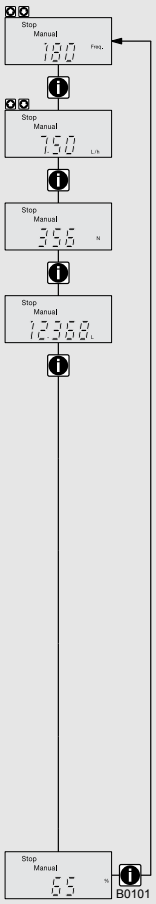	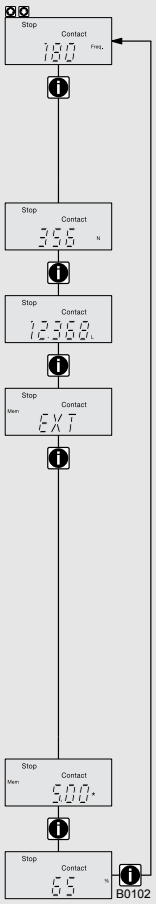	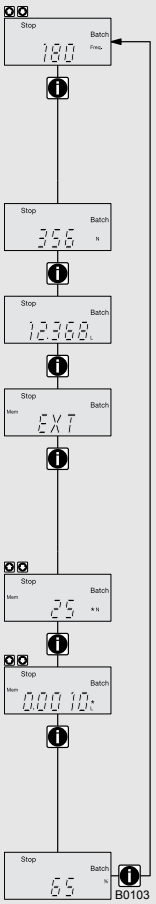
Capacity				
Total number of str				
Total litres (metering quantity)				
"External" display				
Signal current				
Remaining strokes				
Batch size / Remaining litres				
Factor				
Stroke length				

= variables which can be changed directly using the UP or DOWN arrow keys		"Mem" identifier only in the event that function extension "Memory" is activated	

The “Capacity”, “Total litres” and “Batch size / Remaining litres” continuous displays only appear with a calibrated pump

* “Stroke length” continuous display only with “Calibration function" = 1

23 Index

1, 2, 3 ...

"Analog" operating mode settings 38
"Batch" operating mode settings 43
"Contact" operating mode settings 41
"External control" terminal 29
"Manual" operating mode settings 38
“Auxiliary rate” function settings 46
“Calibrate” function settings 44
“Flow” function settings 46
“Pressure stages” function settings 45
4 - 20 mA 38

A

Altitude of site 65
Analog 16, 38
Analogue 30
Analogue input 29
Assembly 19
AUX menu 46
Auxiliary frequency 17, 18, 29, 30, 46

B

Basic principles of pump set-up 35
Batch 16, 43
Bleeding 25

C

CALIB menu 44
Calibration 17, 44
Capacity 88
Changing a number 35
Changing individual numbers 35
Changing to Setting mode 36
check 36
Checking adjustable variables 36
Checking the software version 46
Cleaning valves 52
Clear 43, 47
CLEAR window 47
Code setting 46
Compatibility 65
Confirming an entry 35
Connector size 62
Contact 16, 41
Control elements 12
Correct 36
Curve 38

D

Declaration of Conformity 91
Decommissioning 60
Degree of protection 65
Deleting the total number of strokes or total litres 47
Diagrams for adjusting the capacity 88
Dimensional drawings 67
Disposal 61
Draining the liquid end 60

E

Electrical data 63
Electrical installation 27
Emergency 10
Error 18
Error processing 41
Exiting a menu option without confirming it 35
External contact 18, 29, 30
External frequency changer 18

F

Factor 41
Fault indicating relay 17, 32, 33
Fault indicator 13, 17
Fault statuses 18
Flow 17
FLOW menu 46
Function 44, 45, 46
Function indicator 17
Functions 16, 18, 43

G

General non-discriminatory approach 2

H

Hierarchy of operating modes 18

I

Identification of safety notes 8
Identity code 6
Incorrectly set digits 36
Incremental changing of a variable 35
Information in the event of an emergency 10
Installation, hydraulic 20
Installing hose lines 20
IP 65

K

Keys 13

L

LCD screen 13
Leakage hole 50
Level switch 17, 30, 32
Linear 39
Lock 46
Lower side band 39, 40

M

mA input 29
Mains cable 28
Maintenance 50
Manual 16, 18, 38
Material specifications 63
Memory 43
Metering monitor 31, 46
Metering pumps with bleed valve 25
Metering pumps without integral relief valve 25
Metering pumps without self-bleeding 20
Minimum stroke length 63
MODE menu 16, 37

N

Non-discriminatory approach 2

O

Operating display 13, 17
Operating mode 38, 41, 43
Operating mode settings 38
Operating modes 16, 18
Options 16
Ordering information 86
Output relay 17
Overview of equipment 12

P

Pacing relay 17, 33
Pause 17, 18, 29, 30
Performance data 62
Power consumption 63
Precision 63
PRESS menu 45
Pressure stages 45
Priming 17, 18
Programmable function settings 43
Protect 46
Protection against contact and humidity 65
Protection class 65

Q

Qualification of personnel 11

R

Reduction 42
Relay 32
Repair 52
Replacing the diaphragm 54
Reproducibility 63
Return line 25
Return pipe 20, 25

S

Safety chapter 8
Safety requirements 65
Selecting the operating mode 37
Semiconductor switch 33
Set 35
SET menu 38, 43
Setting mode 36
Shipping weight 66
Sound pressure level 11, 66
Standard installation 26
Step-up 42
Stop 17, 18
Stroke length adjustment knob 13
Supply voltage 28
SWVER 46
Symbols 26

T

Technical data 62
Terminals 13
Total litres 47

U

Upper side band 39, 40

V

Viscosity 63

W

Warning indicator 13, 17
Warning message 32
Warning sign 8

ProMinent GmbH
Im Schuhmachergewann 5-11
69123 Heidelberg,
Germany
Telephone: +49 6221 842-0
Fax: +49 6221 842-419
Email: info@prominent.com
Internet: www.prominent.com

981248, 4, en_GB

© 2022