System pro *M* compact®
Switch disconnector SD 200





The SD 200 extends the proven System pro *M* compact® series by a new range of switch disconnectors which provides state-of-the-art safety and comfort. The series is available with 1 to 4 poles with rated currents from 16 to 63 A and provides disconnection properties according to IEC/EN 60947-3.

With a rated voltage of 253/440 V AC, a rated conditional short-circuit current of 25 kA, terminals with protection from misconnection, a “Real CPI” contact position indication, as well as full compatibility with all MCB accessories, SD 200 is unique in its field of application.

The laser printing and the design of the devices allow a consistent optical appearance in the distribution board.

Special features

- Isolating characteristics acc. to IEC/EN 60947-3
- Clear contact position indication in red/green (“Real CPI”)
- Highest performance at an increased voltage level: 25 kA conditional short-circuit current at U_e = 253/440 V AC acc. to IEC/EN 60947-3
- Protection type IP20 = finger safe
- 35 mm² cylinder lift terminal with 2 terminal openings for two wires or one wire and one busbar for cross wiring
- Bottom fixed auxiliary contact for a space saving installation or upgrade of existing assemblies without additional mounting width
- Consistent design to other System pro *M* DIN rail products
- Cross wiring with MCBs or RCDs using busbars PS
- Durable device identification due to laser labeling
- Captive screws with recessed head
- Compatibility with all MCB accessories
- Approved acc. to IEC/EN 60947-3 for international use

Power and productivity
for a better world™

Switch disconnector SD 200
Technical data

Electrical data	
Standards	IEC/EN 60947-3
Poles	1P, 2P, 3P, 4P
Rated current I_e	16 A, 25 A, 32 A, 40 A, 50 A, 63 A
Utilization category	AC-23A, DC-21A
Rated voltage U_e	1P: 253 V AC; 60 V DC 2P: 440 V AC, 125 V DC 3…4P: 440 V AC
Insulation voltage U_i	440 V AC
Max. power frequency recovery voltage $U_{max.}$	1P: 266 V AC, 63 V DC 2P: 462 V AC, 131 V DC 3…4P: 462 V AC
Min. operating voltage U_{Bmin}	12 V AC
Rated frequency f	50/60 Hz, DC
Suitable for isolation	Yes
Rated conditional short-circuit current	25 kA in series with NH 00 ≤ 63 A gG
Overvoltage category	III
Pollution degree	3
Rated impulse withstand voltage $U_{imp.}$ (1.2/50µs)	4 kV (test voltage 6.2 kV at sea level; 5 kV at 2,000 m)
Dielectric test voltage	2 kV (50/60 Hz, 1 min.)
Mechanical data	
Housing	Insulation group I, RAL 7035
Toggle	Insulation group II, red, sealable
Contact position indication	Marking on toggle, I ON / 0 OFF Real CPI (green OFF/red ON)
Protection degree acc. to EN 60529	IP20 / IP40 in enclosure with cover
Electrical endurance	I_e < 32 A: 20,000 ops. (AC), 1,500 ops. (DC) I_e ≥ 32 A: 10,000 ops. (AC), 1,500 ops. (DC)
Mechanical endurance	20,000 ops.
Shock resistance acc. to IEC/EN 60068-2-27	25 g, 2 shocks, 13 ms
Vibration resistance acc. to IEC/EN 60068-2-6	5g, 20 cycles at 5…150…5 Hz with load 0.8 I_n
Environmental conditions (damp heat cyclic) acc. to EC/EN 60068-2-30	28 cycles with 55°C/90-96% and 25°C/95-100% [°C/RH]
Ambient temperature	-25 … +55 °C
Storage temperature	-40 … +70 °C
Installation	
Terminal	Cylinder lift terminal
Safety wire guard	Yes
Two terminal openings for conductor and busbar	Yes
Cross-section of conductors	35 mm^2
Cross-section of busbars	10 mm^2
Torque	2.8 Nm
Screwdriver	No. 2 Pozidrive
Mounting	On DIN rail 35 mm acc. to EN 60715 by fast clip
Mounting position	Optional
Removal without disassembling of the busbar	Yes
Supply	Optional
Dimensions and weight	
Mounting dimensions acc. to DIN 43880	Mounting dimension 1
Pole dimensions (H x D x W)	88 x 68 x 17.5 mm
Pole weight	approx. 85 g
Combination with auxiliary elements	
Auxiliary contact	Yes
Signal/auxiliary contact	Yes
Shunt trip	Yes
Undervoltage release	Yes
Motor operating device	Yes
Padlock	Yes
Approvals	
	CE and RoHS conform Approvals: VDE

Switch disconnector SD 200
Accessories

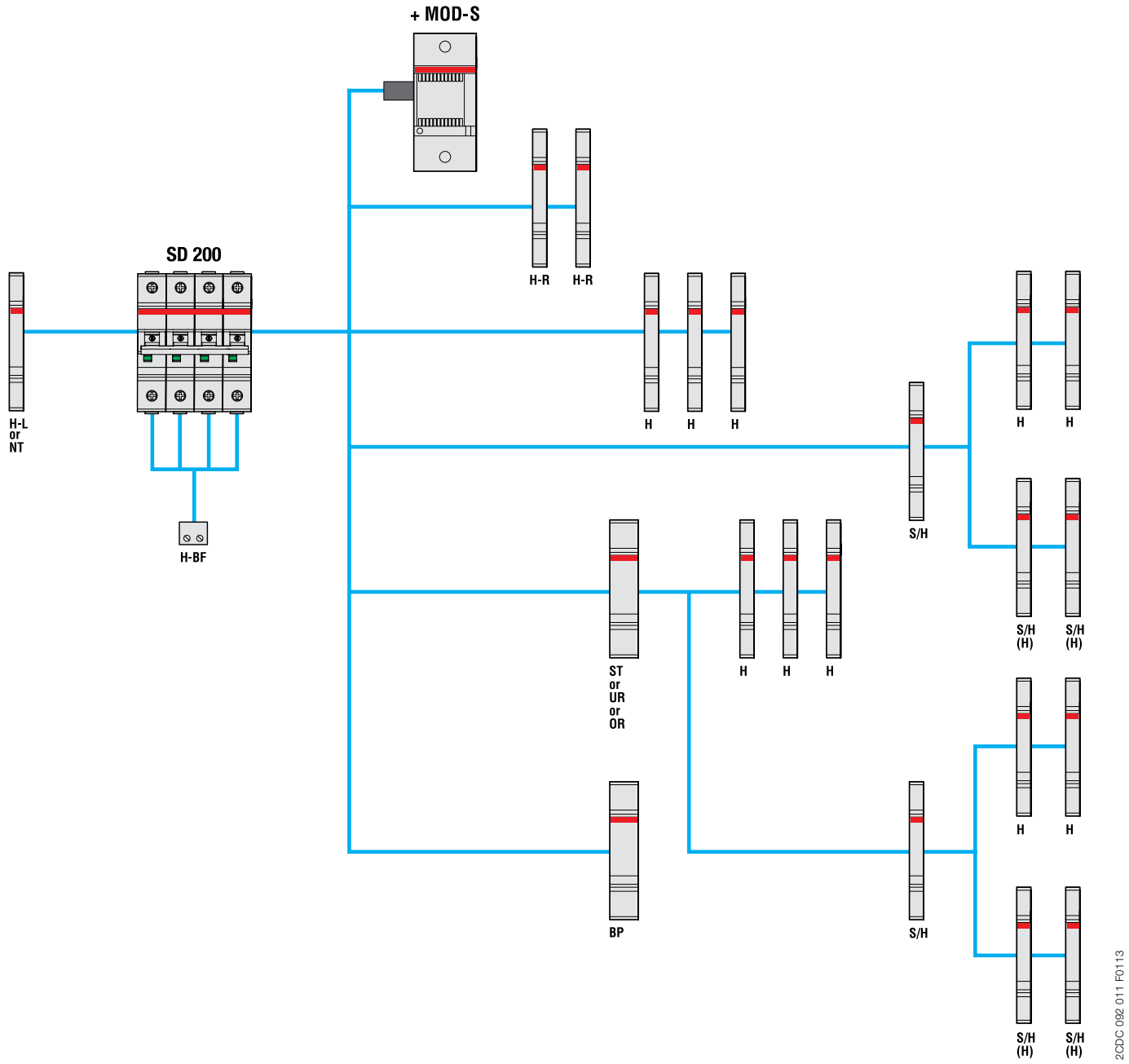

H	Auxiliary contact (changeover contact)	H-L	Auxiliary contact to be mounted on the left
S/H	Signal/Auxiliary contact	H-R	Auxiliary contact to be mounted on the right (2 contacts)
S/H (H)	Signal/Auxiliary contact used as auxiliary contact	H-BF	Auxiliary contact, bottom fitting (1 per pole)
ST	Shunt trip	BP	Mechanical tripping device
UR	Undervoltage release	NT	Neutral disconnector
OR	Overvoltage release		
MOD-S	Motor operating device		

Switch disconnector SD 200
Conditional short-circuit resistance, dimensional drawing and wiring diagrams

Conditional short-circuit restistance (in kA) in combination with back-up protection

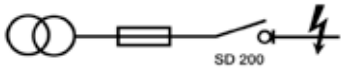

		Supply side: NH 00 – gG					
Load side:	I_e (A)	16	25	32	40	50	63
SD 200	16	25					
	25	25	25				
	32	25	25	25			
	40	25	25	25	25		
	50	25	25	25	25	25	
	63	25	25	25	25	25	25

Dimensional drawing

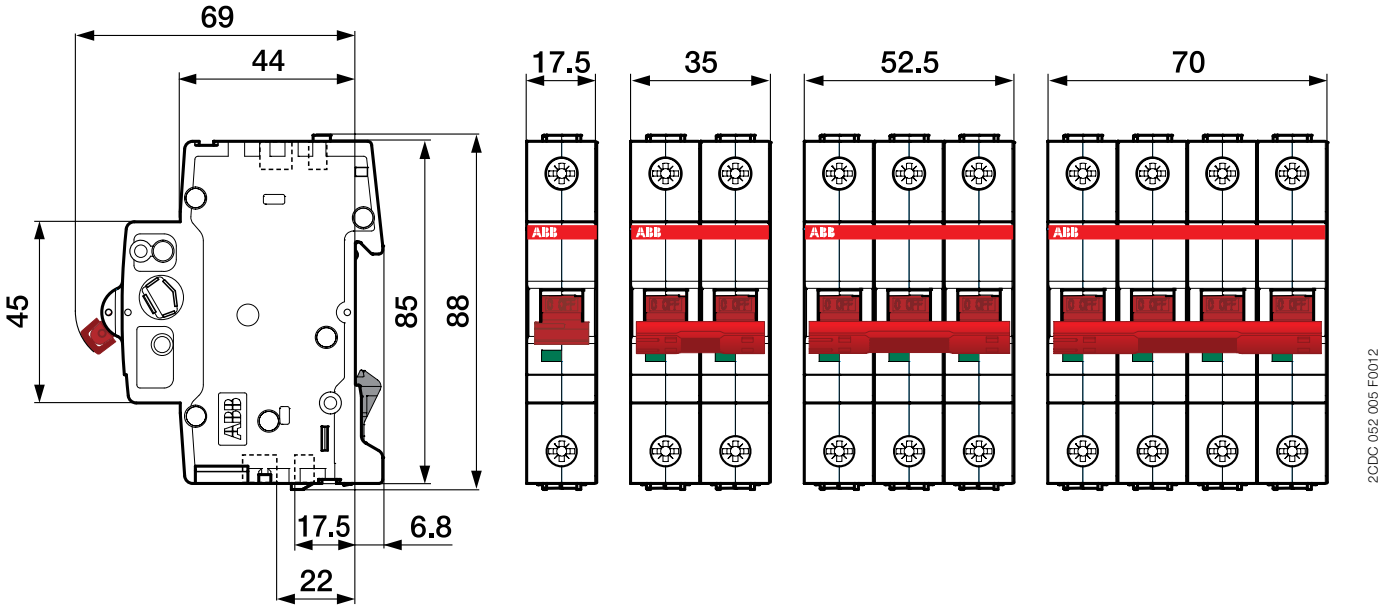

Wiring diagrams



Switch disconnector SD 200
Ordering data



SD 201



SD 202



SD 203



SD 204

Rated current: 16 A

Poles	Rated voltage V AC	Power loss W	Bbn 4016779 EAN	Type	Order code	Weight 1 piece kg	Pack unit pc.
1	253		904063	SD201/16	2CDD281101R0016	0.085	10
2	440		904124	SD202/16	2CDD282101R0016	0.170	5
3	440		904186	SD203/16	2CDD283101R0016	0.255	1
4	440		904247	SD204/16	2CDD284101R0016	0.340	1

Rated current: 25 A

Poles	Rated voltage V AC	Power loss W	Bbn 4016779 EAN	Type	Order code	Weight 1 piece kg	Pack unit pc.
1	253		904070	SD201/25	2CDD281101R0025	0.085	10
2	440		904131	SD202/25	2CDD282101R0025	0.170	5
3	440		904193	SD203/25	2CDD283101R0025	0.255	1
4	440		904254	SD204/25	2CDD284101R0025	0.340	1

Rated current: 32 A

Poles	Rated voltage V AC	Power loss W	Bbn 4016779 EAN	Type	Order code	Weight 1 piece kg	Pack unit pc.
1	253		904087	SD201/32	2CDD281101R0032	0.085	10
2	440		904148	SD202/32	2CDD282101R0032	0.170	5
3	440		904209	SD203/32	2CDD283101R0032	0.255	1
4	440		904261	SD204/32	2CDD284101R0032	0.340	1

Rated current: 40 A

Poles	Rated voltage V AC	Power loss W	Bbn 4016779 EAN	Type	Order code	Weight 1 piece kg	Pack unit pc.
1	253		904094	SD201/40	2CDD281101R0040	0.085	10
2	440		904155	SD202/40	2CDD282101R0040	0.170	5
3	440		904216	SD203/40	2CDD283101R0040	0.255	1
4	440		904278	SD204/40	2CDD284101R0040	0.340	1

Rated current: 50 A

Poles	Rated voltage V AC	Power loss W	Bbn 4016779 EAN	Type	Order code	Weight 1 piece kg	Pack unit pc.
1	253		904100	SD201/50	2CDD281101R0050	0.085	10
2	440		904162	SD202/50	2CDD282101R0050	0.170	5
3	440		904223	SD203/50	2CDD283101R0050	0.255	1
4	440		904285	SD204/50	2CDD284101R0050	0.340	1

Rated current: 63 A

Poles	Rated voltage V AC	Power loss W	Bbn 4016779 EAN	Type	Order code	Weight 1 piece kg	Pack unit pc.
1	253		904117	SD201/63	2CDD281101R0063	0.085	10
2	440		904179	SD202/63	2CDD282101R0063	0.170	5
3	440		904230	SD203/63	2CDD283101R0063	0.255	1
4	440		904292	SD204/63	2CDD284101R0063	0.340	1

Contact us

ABB STOTZ-KONTAKT GmbH
Eppelheimer Straße 82
69123 Heidelberg, Germany
Phone: +49 (0) 6221 7 01-0
Fax: +49 (0) 6221 7 01-13 25
E-Mail: info.desto@de.abb.com

You can find the address of your local sales organization on the ABB home page
http://www.abb.com/contacts
-> Low Voltage Products and Systems

Note:
We reserve the right to make technical changes or modify the contents of this document without prior notice. With regard to purchase orders, the agreed particulars shall prevail. ABB AG does not accept any responsibility whatsoever for potential errors or possible lack of information in this document.

We reserve all rights in this document and in the subject matter and illustrations contained therein. Any reproduction, disclosure to third parties or utilization of its contents – in whole or in parts – is forbidden without prior written consent of ABB AG.

Copyright© 2014 ABB
All rights reserved

Order number 2CDC 441 015 D0201 (05/13-pdf)

Power and productivity
for a better world™