# Safety Relay Combination
Series SCR

| Description **SCR 4-W22-3.5-D** | Article number **6075111009** |
|---|---|

**Assembly and function**
**(function circuit diagram)**

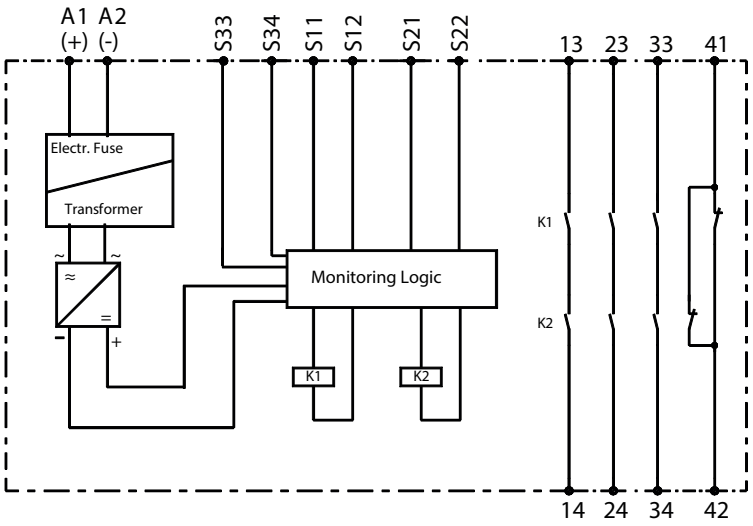




| | |
|---|---|
| 13-14, 23-24, 33-34 | safety circuits (normally open) |
| 41-42 | auxiliary circuits (normally close) |
| S33-S34 | START button |
| S11-S12, S21-S22 | EMERGENCY-STOP channel 1 and 2 |

| **Electrical Data** | | |
|---|---|---|
| Supply voltage | $U_e$ | 24 V AC/DC |
| Voltage range | | 0,90 ...1,1 $U_B$ |
| Frequency | | 50 ... 60 Hz |
| Power consumption appr. | | 24V DC: 3 W, 24V AC: 5 VA |

| **Conductor data** | |
|---|---|
| conductor connection | 2 x 1,5 mm² solid wire<br>2 x 1,0 mm² strand with wire end ferrule<br>DIN VDE 46228 |
| Max. conductor length (input circuit) | 2 x 100m (single channel), 4 x 100m (dual channel) |
| Conductor cross-section | 2 x 1,5 mm² / 4 x 1,5 mm² |
| Capacity | 150 nF/km |



**Technical modifications and errors excepted.**
The technical datasheet corresponds to the technical state as of 2019-01-31 and will not be removed in case of changes.

| Contact data | |
|---|---|
| Contact configuration | 3 N.O. contacts / 1 N.C. contact |
| Contact type | Relay forcibly guided contacts |
| Contact material | $AgSnO_2$ flash gold or comparable material |
| Switching voltage | 240V AC, 24V DC |
| Switching current | 5 A |
| Summation current | 13,8 A |
| Utilization category (DIN EN 60947-5-1) | AC 15 230 V / 5 A; DC 13 24 V / 5 A |
| Max. switching capacity | 1200 VA (ohms load) |
| Mechanical life | $10^7$ operations |
| Electrical life | $10^5$ operations (DC 24V/2A) |
| Creapage and clearance distances (DIN VDE 0160) | at pollution grade 2, Voltage category 3 / 250 V |
| Contact protection | 6,3 A fast acting or 4 A slow acting DIN VDE 0660 Teil 200 |
| Short Circuit Withstand acc. IEC60947-5-1 | 6A |
| Short Circuit Protection Device (SCPD, Fuse links), size D01 | gG acc. IEC IEC60269-1; IEC60269-3-1; VDE036-T301 |
| Restarting readines time | 0,5 s (minimum switch off time the inputs) |
| Delay on deenergisation K1 | |
| One-channel | < 130 ms |
| Two channels | 24 V DC: < 30 ms; AC: < 50 ms |

| Mechanical data | |
|---|---|
| Enclosure material | Polyamide PA 6.6 |
| Dimensions ( W x H x D ) in mm | 22,5 x 114,5 x 99 |
| Mounting | Click-fastening for DIN-Rail |

| Environmental data | |
|---|---|
| Operating temperature range | -25 °C ... +55 °C (UL +40 °C) |
| Air humidity | Swap climate, 95 %, 0 ... +50 °C |
| Degree of protection, terminals | IP 20 DIN VDE 0470 part 1 |
| Degree of protection, enclosure | IP 40 DIN VDE 0470 part 1 |
| Shock resistance N.O./N.C. contacts | 8g / 2g |

| EU Conformity | |
|---|---|
| | acc. to directive 2006/42/EG (Safety-of-Machinery-Directive) |
| | acc. to directive 2014/30/EU (EMC-Directive) |

| Approvals | |
|---|---|
| | TÜV type tested |
| | cUL us |

| Certifications | |
|---|---|
| Tested in accordance with | EN ISO 13849-1 |
| Achieved level/category | Performance Level e , Kat.4 |
| MTTFd [years] | 154 “high” |
| DC | 99 % “high” |
| CCF | achieved |



**Technical modifications and errors excepted.**
The technical datasheet corresponds to the technical state as of 2019-01-31 and will not be removed in case of changes.