

Model Number

V15-W-2M-PVC

Female cordset, M12, 5-pin, PVC cable

Features

- Knurled nut suitable for tool assembly
- Immunity to vibration, with mechanical latching
- Gold plated contacts
- Degree of protection IP67 / IP68 / IP69K

Dimensions

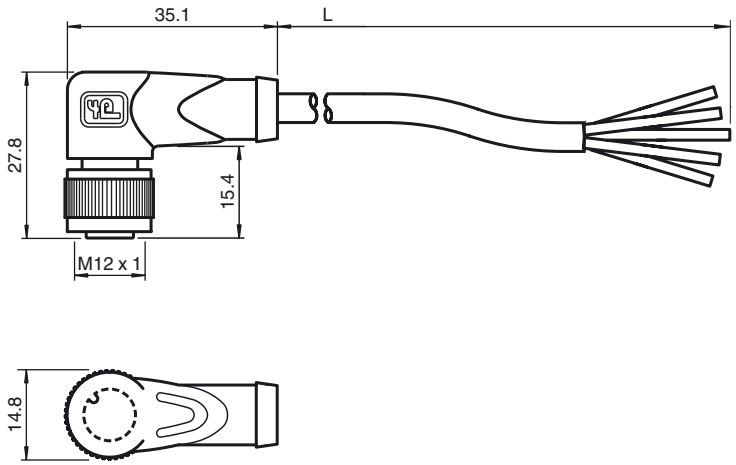

Technical data

General specifications		
Number of pins		5
Electrical specifications		
Operating voltage	U_B	max. 60 V AC/DC
Operating current	I_B	max. 4 A
Volume resistance		< 5 mΩ
Ambient conditions		
Ambient temperature		Body: -40 ... 90 °C (-40 ... 194 °F) cable, fixed: -25 ... 70 °C (-13 ... 158 °F) cable, flexing: -5 ... 70 °C (23 ... 158 °F)
Pollution Degree		3
Mechanical specifications		
Contact elements		spring-loaded contact socket
Pin diameter		1 mm
Degree of protection		IP67 / IP68 / IP69k
Material		
Contacts		CuSn / Au
Contact surface		Au
Body		TPU, black
Cable		PVC
Slotted nut		Diecast zinc
Core insolation		PVC
Cable		fine-strand, flexible
Sheath diameter		Ø 4.8 mm
Bending radius		> 10 x cable diameter, moving
Color		grey
Cores		5 x 0.34 mm^2
Conductor construction		19 x 0.15 mm Ø
Length	L	2 m
Flammability		
Contact material		94 HB
Housing		94 V-2
Compliance with standards and directives		
Standard conformity		
Degree of protection		EN 60529:2000
Standards		IEC 61076-2-101:2008

Electrical connection

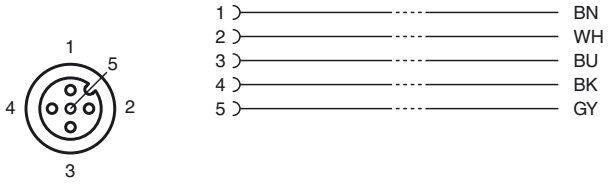

Release date: 2015-01-08 11:38 Date of issue: 2015-01-08 109481_eng.xml