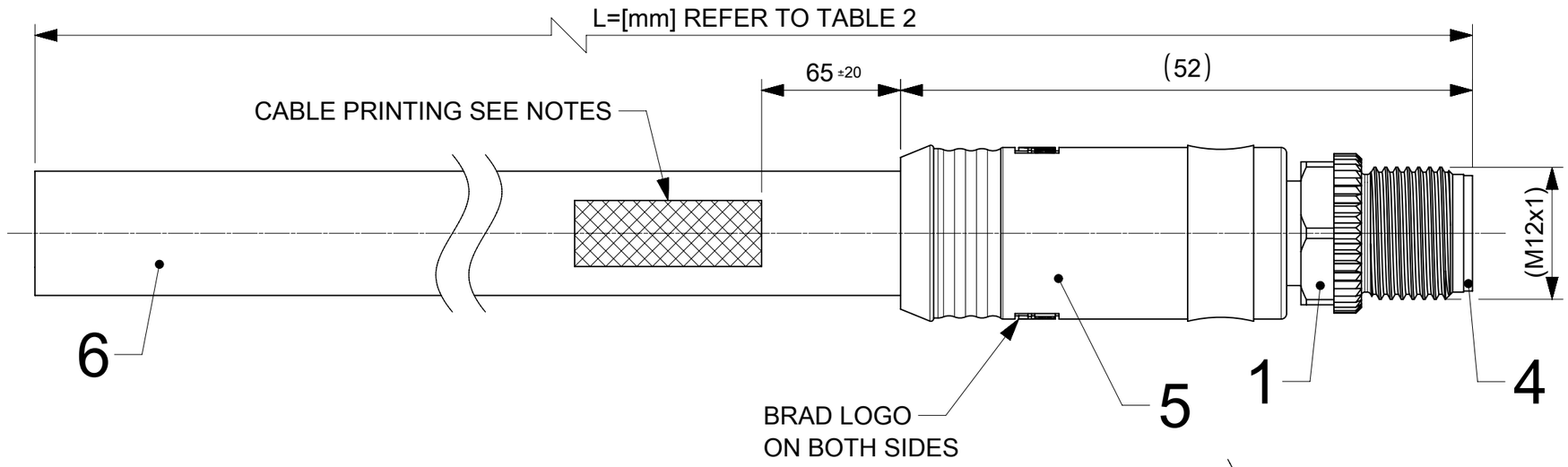

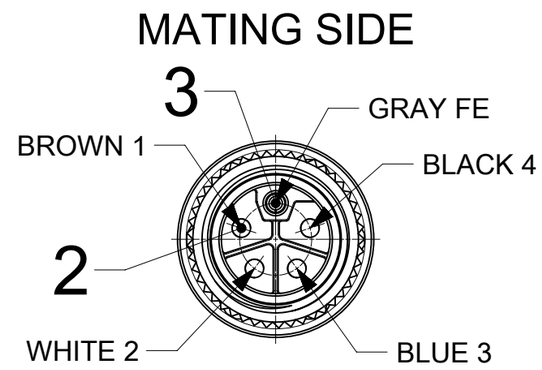

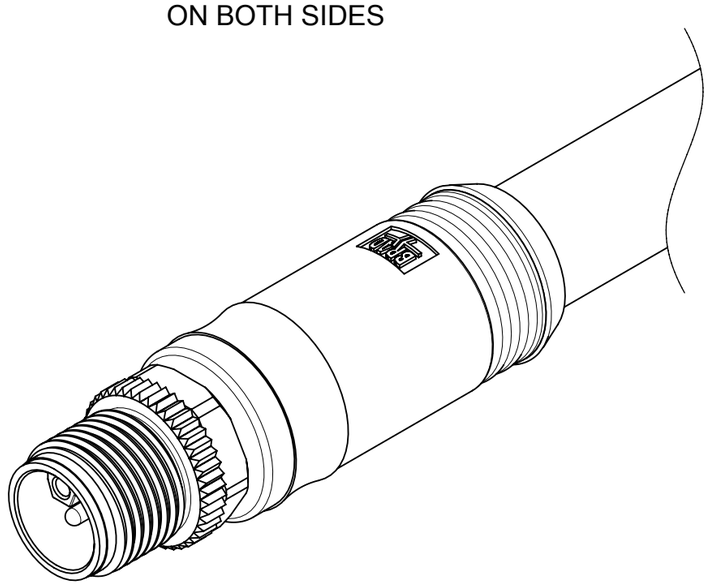

NOTES:

RATED VOLTAGE: MAX. 63V AC/DC
RATED CURRENT: MAX. 16A at 40°C (derating has to be considered)
IP RATING: IP67 (mated and locked condition)
TEMPERATURE RANGE: -25°C TO +85°C

CABLE PRINTING (sequence as shown below):
- MOLEX engineering no. (see page 2)
- MOLEX material no. (see page 2)
- MOLEX MAX. 63V AC/DC MAX. 16 A USR
- MOLEX AND DATE OF MANUFACTURING (YY=YEAR; WW=WEEK): MXYYWW
- Not for current interrupting
- PROFINET 24V Power 4x2,5 + FE

PART ACCORDING PRODUCT SPEC: 1205010169
PACKAGING ACCORDING PACKAGING SPEC: 1205010169

TABLE 1

	POS	DESCRIPTION	MATERIAL	FINISH
	1	NUT M12 MA	BRASS	Ni
	2	CONTACT 15 MA	BRASS	Au
	3	CONTACT 15 FE	BRASS	Au
	4	INSERT	PA	GREY
	5	OVERMOLD	TPE	BLACK
	6	CABLE 5x2.5 D11.3	WSOR	GREY
OPTIONAL	7	ID CARRIER	-	-

THIS DRAWING CONTAINS INFORMATION THAT IS PROPRIETARY TO MOLEX ELECTRONIC TECHNOLOGIES, LLC AND SHOULD NOT BE USED WITHOUT WRITTEN PERMISSION

FUNCTIONAL SYMBOLS: FA = 0, FC = 0, FP = 0
DIVISIONAL SYMBOLS

DIMENSION UNITS	SCALE
mm	2:1

GENERAL TOLERANCES (UNLESS SPECIFIED)

ANGULAR TOL	±	1.0 °
4 PLACES	±	
3 PLACES	±	
2 PLACES	±	0.05
1 PLACE	±	0.3
0 PLACES	±	0.5

DRAFT WHERE APPLICABLE MUST REMAIN WITHIN DIMENSIONS

CURRENT REV DESC: FIRST RELEASE

EC NO: 658106
DRWN: NFRITZEN 2020/12/16
CHK'D: RSILLER 2021/03/15
APPR: RSILLER 2021/03/15

INITIAL REVISION:
DRWN: FDAFERNER 2020/01/29
APPR: RSILLER 2021/03/15

THIRD ANGLE PROJECTION | DRAWING: A3-SIZE | SERIES: 120500

molex

CSE M12 5P LC MA STR WSOR GY XM UNSH

PRODUCT CUSTOMER DRAWING

DOCUMENT NUMBER	DOC TYPE	DOC PART	REVISION
1205000214	PSD	000	A

MATERIAL NUMBER	CUSTOMER	SHEET NUMBER
SEE TABLE 2	GENERAL MARKET	1 OF 2

DOCUMENT STATUS	P1	RELEASE DATE	2021/03/15 10:51:44

FORMAT: master-tb-mod-A3
REVISION: J
DATE: 2020/01/14

ENGINEERING NO - NUMERICAL CODE (Available parts see PART LIST table. Other parts available upon request).

1	2	3	4	5	6	7	8	9	10	11	12	13	14	OPTIONAL
L	0	P	X	0	0	6	B	6	3	M	X	X	X	X

- 1: L = L-Code — First End
- 2: 0 = SE — Second End
- 3: P = Power
- 4: 4 = 4 POLES; 5 = 5 POLES — Number of Pins
- 5–7: SINGLE ENDED UNSHLD; 006 = male straight — Head configuration
- 8–10: B63 = CABLE 5X2.5 WSOR GY D11.3 TPU UNSH — Cable used
- 11: M = Meter — Unit of measure
- 12–14: 005 = 0.5 Meter; 010 = 1 Meter; 020 = 2 Meter; 100 = 10 Meter; 150 = 15 Meter — Cable length
- OPTIONAL: H = ID Tag

TABLE 2

NOMINAL SECTION 2,5mm²			
MATERIAL NO.	ENGINEERING NO.	L [mm]	TOLERANCE [mm]
1205000214	L0P5006B63M010	1000	+40
1205000215	L0P5006B63M020	2000	+60
1205000216	L0P5006B63M030	3000	+60
1205000217	L0P5006B63M050	5000	+60
1205000218	L0P5006B63M100	10000	+80
1205000219	L0P5006B63M150	15000	+140
1205000220	L0P5006B63M200	20000	+140

DOCUMENT STATUS	P1	RELEASE DATE	2021/03/15 10:51:44

FORMAT: master_Sheet-A3
REVISION: J
DATE: 2020/01/16

THIS DRAWING CONTAINS INFORMATION THAT IS PROPRIETARY TO MOLEX ELECTRONIC TECHNOLOGIES, LLC AND SHOULD NOT BE USED WITHOUT WRITTEN PERMISSION

FUNCTIONAL SYMBOLS: FA = 0; FC = 0; FD = 0
DIVISIONAL SYMBOLS

DIMENSION UNITS	SCALE
mm	1:1

GENERAL TOLERANCES (UNLESS SPECIFIED)

ANGULAR TOL	± 1.0 °
4 PLACES	±
3 PLACES	±
2 PLACES	± 0.05
1 PLACE	± 0.3
0 PLACES	± 0.5

DRAFT WHERE APPLICABLE MUST REMAIN WITHIN DIMENSIONS

CURRENT REV DESC: FIRST RELEASE

EC NO: 658106
DRWN: NFRITZEN 2020/12/16
CHK'D: RSILLER 2021/03/15
APPR: RSILLER 2021/03/15

INITIAL REVISION:
DRWN: FDAFERNER 2020/01/29
APPR: RSILLER 2021/03/15

THIRD ANGLE PROJECTION | DRAWING: A3-SIZE | SERIES: 120500

molex

CSE M12 5P LC MA STR WSOR GY XM UNSH

PRODUCT CUSTOMER DRAWING

DOCUMENT NUMBER	DOC TYPE	DOC PART	REVISION
1205000214	PSD	000	A

MATERIAL NUMBER	CUSTOMER	SHEET NUMBER
SEE TABLE 2	GENERAL MARKET	2 OF 2