CONSOLE CSNC 100 à 450 GS
CSNC BRACKET 100 to 450 PG

legrand® | CABLE MANAGEMENT

FT0100-1 | **01/15**

REF	Oblong Nbr	WIRE MESH TRAY L / W
CSNC-100	2	100
CSNC-150	3	150
CSNC-200	4	200
CSNC-300	6	300
CSNC-400	8	400
CSNC-450	9	450

REF 300 to 450

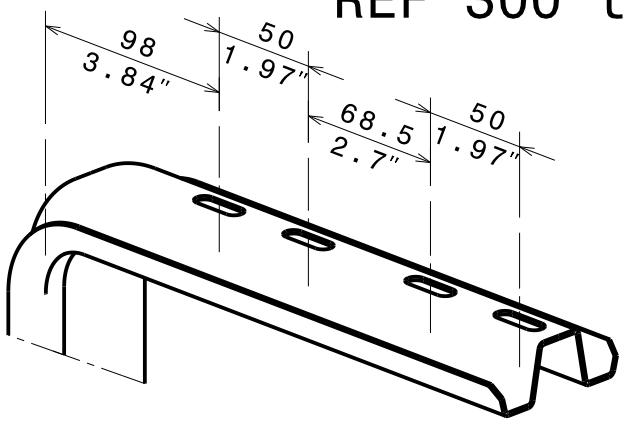

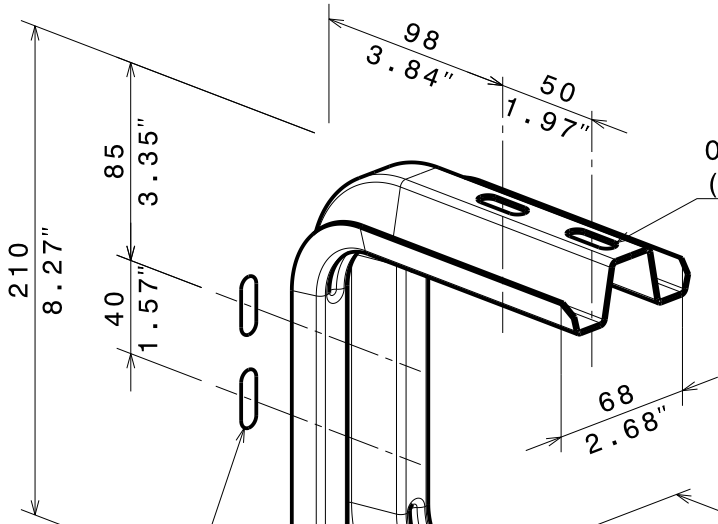

REF 100 to 200

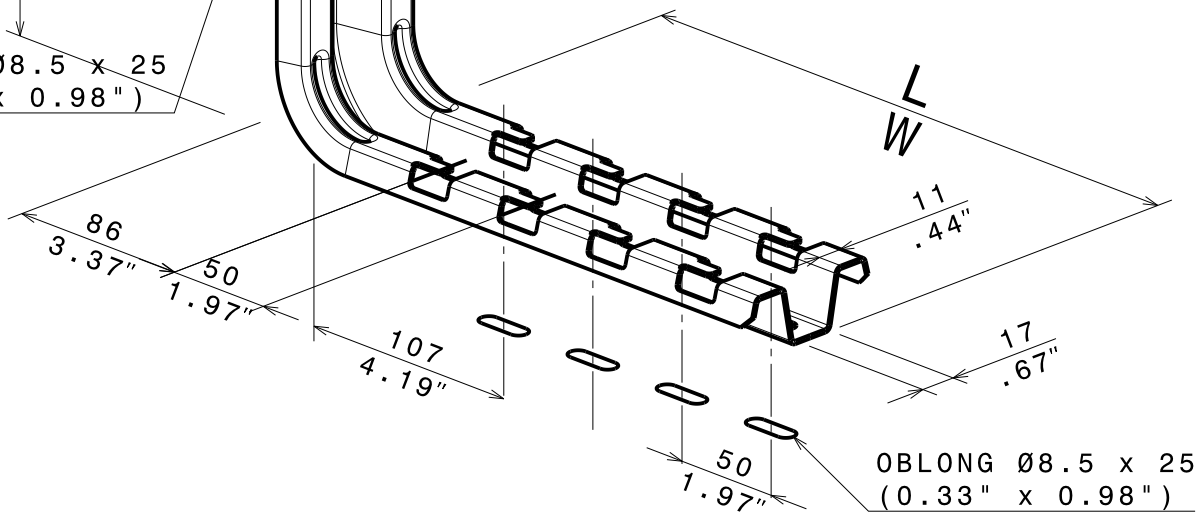

REF	CODE	POIDS (Kg)	WEIGHT (lb)	L (mm)	L (inch)	Epais. Th.	
CSNC-100	556 300	0.640	1.410	178.5	7.03	1.5	0.06
CSNC-150	556 310	0.700	1.540	228.5	9.00	1.5	0.06
CSNC-200	556 320	0.760	1.680	278.5	10.96	1.5	0.06
CSNC-300	556 330	1.109	2.450	378.5	14.90	1.75	0.07
CSNC-400	556 340	1.241	2.740	478.5	18.84	1.75	0.07
CSNC-450	556 350	1.371	3.030	528.5	20.81	1.75	0.07

MATIERE / MATIERAL
DX 51 D Z275 MAC

EN 10346

PROTECTION / COATING
GS / PG

Propriété exclusive de LEGRAND, ne peut être ni copié, ni transmis à des tiers sans autorisation écrite.
Exclusive property of LEGRAND shouldn't be reproduced or transmitted to any people without written authorization