Brand of NTN corporation

Technical data



629EE

Single row deep groove ball bearings

Deep groove ball bearing, radial contact, pressed steel cage, contact seals on both sides

VISUAL (S)

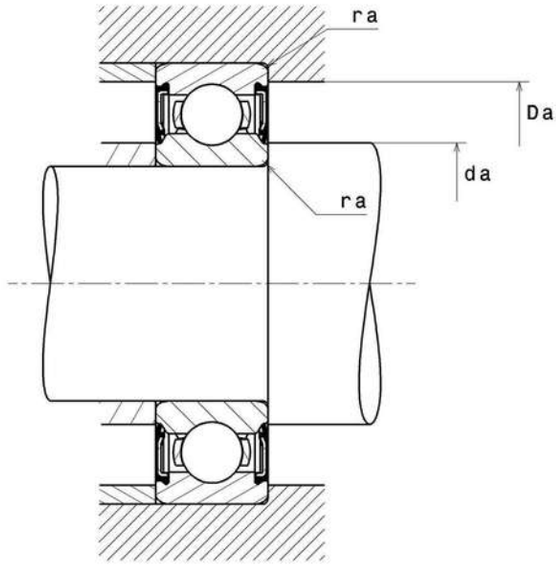

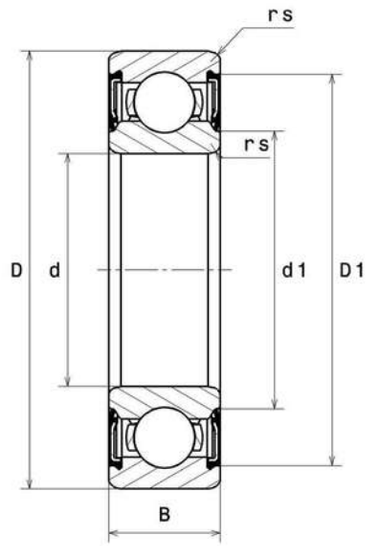

NTN Europe
1 rue des Usines · BP 2017 · 74010 Annecy Cedex · France · Tel. +33 (0)4 50 65 30 00
S.A. au capital de 322 639 919 € · RCS ANNECY B 325 821 072 · Id. Fiscale : FR 48 325 821 072
SIRET 325 821 072 00015 · Code APE 2815 Z · Code NACE 28.15

629EE
Single row deep groove ball bearings

PRODUCT DEFINITION	
Brand	SNR
d - Internal diameter	9 mm
D - External diameter	26 mm
B - Bearing/Inner ring width	8 mm
d1 - External diameter inner ring	13,9 mm
D1 - Inner diameter outer ring	22,5 mm
rs - Min fillet radius	0,3 mm
Radial clearance class	CN
Mass	0,019 kg

PRODUCT PERFORMANCE	
C - Dynamic load	4,8 kN
C0 - Static load	1,97 kN
Cu - Fatigue limit load	0,09 kN
f0 - Coefficient	12.4
Nlim - Mechanical Limit Speed	21000 tr/min
Tmin - Min operating temperature	-20 °C
Tmax - Max operating temperature	120 °C

BEARING FREQUENCIES	
BPFO - Characteristic outer ring frequency (60 rpm)	2.574 Hz
BPFI - Characteristic inner ring frequency (60 rpm)	4.426 Hz
FTF - Characteristic cage frequency (60 rpm)	0.368 Hz
BSF - Characteristic rolling element frequency (60 rpm)	3.515 Hz

629EE
Single row deep groove ball bearings

ABUTMENT	
da min - Min shoulder diameter IR	11 mm
da max - Max shoulder diameter IR	13,9 mm
Da max - Max shoulder diameter OR	24 mm
ra max - Max shaft & housing fillet radius	0,3 mm

INDUSTRY CALCUL FACTORS

Equivalent dynamic radial load

P = X.Fr + Y.Fa

$\frac{f_0 F_a}{C_0}$	e	Fa / Fr ≤ e		Fa / Fr > e	
		X	Y	X	Y
0.172	0.19	1	0	0.56	2.3
0.345	0.22				1.99
0.689	0.26				1.71
1.03	0.28				1.55
1.38	0.3				1.45
2.07	0.34				1.31
3.45	0.38				1.15
5.17	0.42				1.04
6.89	0.44				1

Equivalent static radial load

Po = Xo.Fr + Yo.Fa

X_0	Y_0
0.6	0.5

For single or DT bearing arrangement :

If Po <Fr, then use Po = Fr