Natural & Painted (1590 Series)

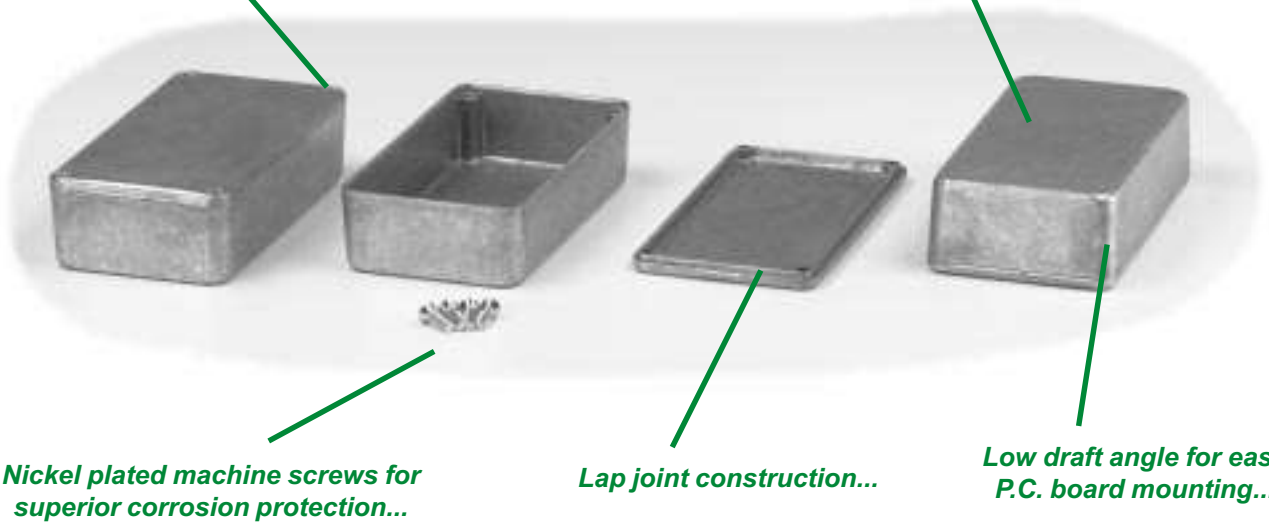

OTHER KEY FEATURES

- Rugged, diecast aluminum alloy (tough yet easy to machine), electronic instrument enclosure.
- Lap joint construction provides protection against access of dust and splashing water. Also provides for improved EMI/RFI shielding.
- Painted version (shown below) is painted with tough polyester powder paint for a lasting finish, even after machining.
- Four (or 6 in 1590D, 1590DD & 1590E, 8 in 1590F) 6-32 x 1/2” machine screws secure lid - into tapped holes.
- Designed to meet IP54.
- Replacement screws for natural finish series, nickel plated, 6-32 x 1/2” - **1590MS100** - Package of 100
- Replacement screws for black painted series, 6-32 x 1/2” - **1590MS50BK** - Package of 50

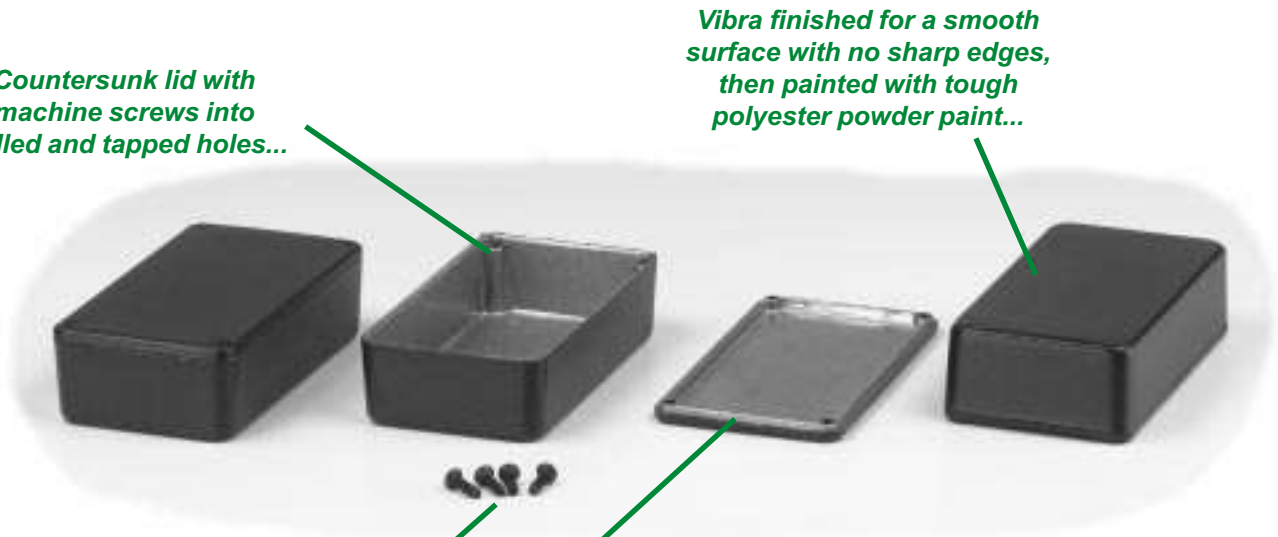

©
CANADA
Guelph, Ontario (519) 822-2960
St. Laurent, Quebec (514) 343-9010
USA
Cheektowaga, NY (716) 651-0086
www.hammondmfg.com
EUROPE
Basingstoke, UK +44 1256 812812
AUSTRALASIA
Queenstown, SA, Australia +61 8 8240 2244

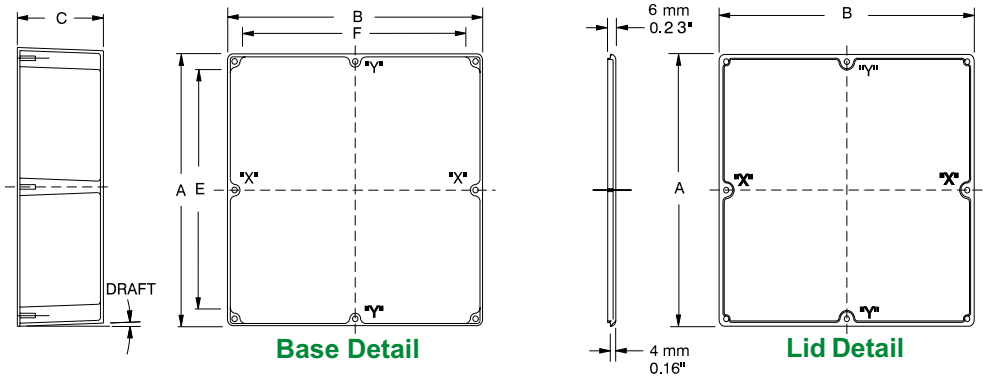

Part Number		Units	Dimensions					Apx. Draft
Unpainted	Black		A	B	C (No Lid)	E	F	
1590LLB	1590LLBBK	inch	1.97	1.97	.83	1.22	1.22	1°15'
		mm	50	50	21	31	31	
1590LB	1590LBBK	inch	1.99	1.99	1.06	1.36	1.36	1°15'
		mm	50.5	50.5	27	34.5	34.5	
1590H	1590HBK	inch	2.07	1.50	1.06	1.41	.86	1°15'
		mm	52.5	38	27	35.9	21.8	
1590Y	1590YBK	inch	3.62	3.62	1.50	2.70	2.70	1°15'
		mm	92	92	38	69	69	
1590A	1590ABK	inch	3.64	1.52	1.06	3.01	.89	1°15'
		mm	92.5	38.5	27	76.5	22.5	
1590G	1590GBK	inch	3.94	1.97	0.83	3.31	1.34	1°15'
		mm	100	50	21	84	34	
1590S	1590SBK	inch	4.35	3.21	1.57	3.72	2.58	1°15'
		mm	110.5	81.5	40	94.5	65.5	
1590B	1590BBK	inch	4.39	2.34	1.06	3.76	1.71	1°15'
		mm	111.5	59.5	27	95.5	43.5	
1590BB	1590BBBK	inch	4.67	3.68	1.18	4.04	3.05	1°15'
		mm	118.5	93.5	30	102.5	77.5	
1590U	1590UBK	inch	4.70	4.70	2.17	4.07	4.07	1°15'
		mm	119.5	119.5	55	103.5	103.5	
1590V	1590VBK	inch	4.70	4.70	3.54	4.07	4.07	1°15'
		mm	119.5	119.5	90	103.5	103.5	
1590C	1590CBK	inch	4.72	3.70	2.07	4.09	3.07	2°
		mm	120	94	52.5	104	78	
1590Q	1590QBK	inch	4.72	4.72	1.18	4.09	4.09	1°15'
		mm	120	120	30	104	104	
1590T	1590TBK	inch	4.74	3.13	2.17	4.11	2.50	1°15'
		mm	120.5	79.5	55	104.5	63.5	
1590N1	1590N1BK	inch	4.77	2.60	1.39	4.09	1.92	1°15'
		mm	121.1	66	35.3	103.8	48.7	
1590KK	1590KKBK	inch	4.92	4.92	2.10	4.13	4.13	1°15'
		mm	125	125	53	105	105	
1590K	1590KBK	inch	4.92	4.92	2.95	4.27	4.27	1°15'
		mm	125	125	75	108.5	108.5	
1590J	1590JBK	inch	5.71	3.74	1.77	5.06	3.09	2°
		mm	145	95	45	128.5	78.5	
1590P1	1590P1BK	inch	6.01	3.24	1.81	5.38	2.48	2°
		mm	153	82	46	137	63	
1590DD	1590DDBK	inch	7.38	4.70	1.30	6.77	4.07	1°15'
		mm	187.5	119.5	33	172	103.5	
1590D	1590DBK	inch	7.38	4.70	2.05	6.75	4.07	2°
		mm	187.5	119.5	52	171.5	103.5	
1590E	1590EBK	inch	7.38	4.70	3.07	6.75	4.07	2°
		mm	187.5	119.5	78	171.5	103.5	
1590F	1590FBK	inch	7.38	7.38	2.48	6.75	6.75	2°
		mm	187.5	187.5	63	171.5	171.5	
1590R1	1590R1BK	inch	7.55	4.38	2.24	6.92	3.76	2°
		mm	192	111	57	176	95.4	

Notes: Assembled height = dimension "C" + .16" (4.0 mm). Wall & lid thickness is roughly .08" (2 mm) and varies with draft due to part being cast. Posts "X" exist on parts 1590D, 1590DD & 1590E. Posts "X" & "Y" exist on part 1590F.
For detailed drawings, CAD files or color photos visit our website at: ***www.hammondmfg.com***