V1H-6000
V1H-6100

Natural frequency : (1)
12 to 18 Hz



DESCRIPTION

The V1H-6000 and V1H-6100 steel mounts have a mounting plate, a cover and a swaged steel shaft.

They are available with stainless steel or mild steel zinc plated metalwork.

The resilient parts are stainless steel wire cushions.

The steel parts are zinc plated.

APPLICATIONS

The V1H-6000 and V1H-6100 mounts have a natural frequency of between 12 and 18 Hz and are designed for suspending rotating machines, electronic cabinets, pipes, air conditioning systems, etc. Its all metal construction means that its characteristics do not deteriorate with time and it maintains its height under load, even in the most severe ambient conditions and temperatures.

The shape of the armature and upper cushion provide high radial performance and a structural strength of 3 g, making it suitable for mounting on board equipment on military ground vehicles and ships.

(1) Natural frequencies with max/min loads, see : OPERATING CHARACTERISTICS.

DIMENSIONS

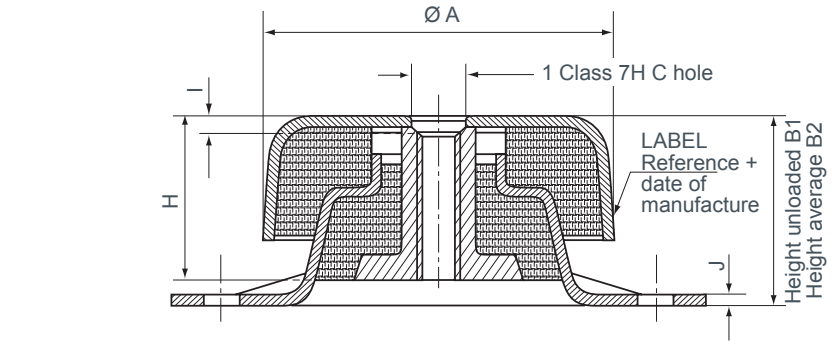

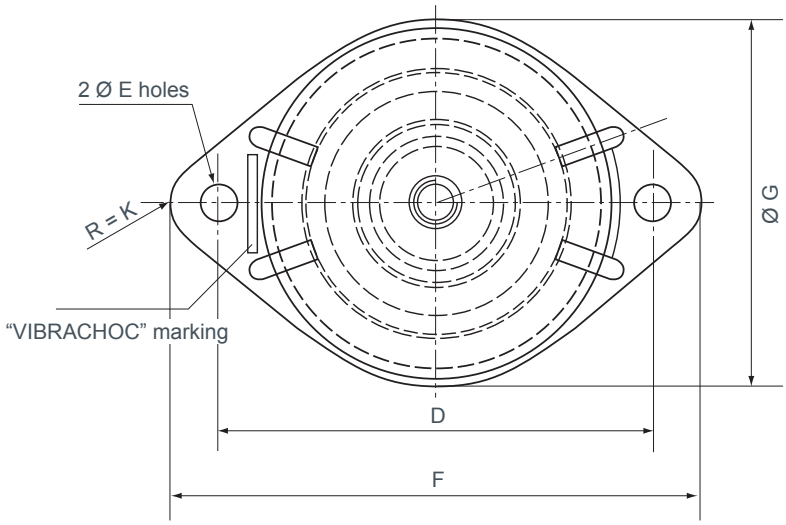

Reference	Ø A (mm)	B1 (mm)	B2 (mm)	C	D (mm)	Ø E (mm)	F (mm)	Ø G (mm)	H (mm)	I (mm)	J (mm)	K (mm)
V1H-6000*	105	62	57	M12	130	11	160	110	50	5	3	15
V1H-6100*	82	56	51	M10	98	9	120	85	46	3	2	11

* load indice, see below.

OPERATING CHARACTERISTICS

- Natural frequency :
  - axial
  - radial

  } 12 to 18 Hz depending on the load.
- Structural strength : 3 g.
- Complies with GAMT13-MIL.STD. 167-1.
- Operating temperature : - 70°C to + 300°C.
- Amplification factor at resonance : < 4.

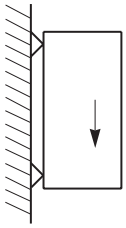

Mountings with radial load
(Consult us)

Steel reference	Inox reference	Load range (daN)	Weight (kg)	Mac dynamic effort (daN)		
				Axial Compression	Axial traction	Radial
V1H-6100-21 V1H-6100-01 V1H-6100-02 V1H-6100-03	V1H-6100-21NX V1H-6100-01NX V1H-6100-02NX V1H-6100-03NX	15 to 40 25 to 75 50 to 150 100 to 250	0,65	120 225 450 750	120 225 450 750	120 225 450 750
V1H-6000-21 V1H-6000-01 V1H-6000-02 V1H-6000-03	V1H-6000-21NX V1H-6000-01NX V1H-6000-02NX V1H-6000-03NX	30 to 75 50 to 150 100 to 300 200 to 500	1,6	225 450 900 1500	225 450 900 1500	225 450 900 1500