MIKALOR

W1 Wire Clip



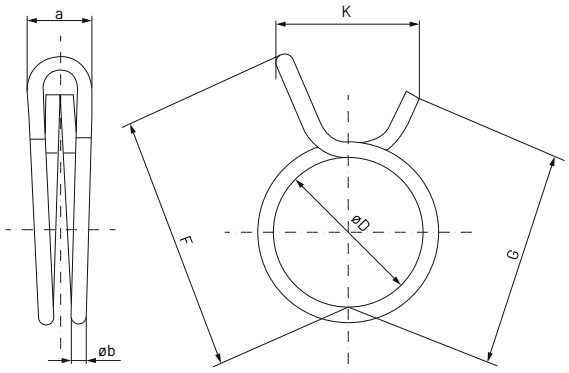

Wire clips are designed especially for use in low pressure applications with small bore hoses, with or without an outer helix. This is a competitively priced clip for use where high clamping force is not required. The spring steel used to manufacture this clip ensures that it adapts to the application diameter regardless of the pressure at any given moment.

MATERIAL:	Spring steel TS 2500-1 EN 10270 SH W1
FINISH:	Zinc-plated Cr3
CORROSION RESISTANCE:	48 hours Salt Spray (ASTM B-117)

Ø D Application	Part Number	a Max.	b Ø	K Max.	F		G		Box Quantity	Outer Box Quantity
					Max.	Min.	Max.	Min.		
7,3-7,8	02016012	5,2	1,0	9,5	14,50	14,00	12,50	12,00	1.000	8.000
7,8-8,3	02016020	5,5	1,0	9,5	14,75	14,25	12,85	12,35	1.000	8.000
8,3-8,8	02016039	5,5	1,0	9,5	15,15	14,65	13,45	12,95	1.000	8.000
8,8-9,3	02016047	5,5	1,0	9,5	15,55	15,05	14,05	13,55	1.000	8.000
9,3-9,9	02016055	5,5	1,0	9,5	16,60	16,10	14,30	13,80	1.000	8.000
9,8-10,4	02016063	6,3	1,2	13,0	18,55	17,55	16,55	15,55	1.000	8.000
10,4-11,0	02016071	6,3	1,2	13,0	20,15	19,15	17,75	16,75	1.000	8.000
11,0-11,6	02016080	6,3	1,2	13,0	20,45	19,45	18,55	17,55	1.000	8.000
11,6-12,3	02016098	7,3	1,5	16,0	22,35	20,85	19,15	18,35	500	4.000
12,1-13,1	02016100	7,3	1,5	16,0	23,60	22,60	20,90	20,10	500	4.000
12,9-13,6	02016119	7,3	1,5	16,0	23,65	22,65	21,45	20,65	500	4.000
13,6-14,4	02016127	7,3	1,5	16,0	25,00	24,00	22,30	21,50	500	4.000
14,4-15,1	02016135	8,4	1,8	15,0	27,10	25,60	24,80	23,30	500	4.000
14,8-15,9	02016143	8,4	1,8	16,5	28,80	27,30	25,70	24,20	500	4.000
15,9-16,8	02016151	8,4	1,8	17,0	30,20	28,70	26,30	24,80	500	4.000
16,8-17,7	02016160	8,4	1,8	17,5	29,95	28,45	26,68	25,15	500	4.000
17,7-18,7	02016178	9,6	1,9	17,5	31,80	30,30	28,30	26,80	500	2.000
18,7-19,6	02016186	9,9	2,0	18,0	32,90	31,40	29,10	27,60	500	2.000
19,6-20,5	02016194	9,9	2,0	18,0	34,00	32,60	30,10	28,60	500	2.000