TI01758P/00/EN/03.24-00
71668320
2024-09-01

Technical Information
Cerabar PMP43
4-20mA HART

Process pressure measurement



Compact digital transmitter with metal process membrane

Application areas

- Reliable, repeatable and stable pressure measurement and hydrostatic level measurement
- Pressure measuring range: up to 100 bar (1 500 psi)
- Process temperature: up to 200 °C (392 °F)
- Accuracy: up to ± 0.075 %

Benefits

- Perfect cleanability thanks to fully welded design
- Easy guided commissioning with intuitive user interface
- Colored display with backlight and touch operation
- Heartbeat Technology for predictive and preventive maintenance
- Bluetooth® wireless technology for commissioning, operation and maintenance
- CIP and SIP capability - Degree of protection: IP66/68/69

Endress+Hauser
People for Process Automation

Table of contents

About this document 3
Symbols 3
List of abbreviations 3
Turn down calculation 4
Graphic conventions 5

Function and system design 5
Measuring principle 5
Measuring system 5
Communication and data processing 5
Reliability 6
Device-specific IT security 6

Input 6
Measured variable 6
Measuring range 6

Output 8
Output signal 8
Signal on alarm for devices with current output 8
Load 8
Damping 8
Ex connection data 8
Protocol-specific data 8

Energy supply 9
Terminal assignment 9
Available device plugs 9
Supply voltage 10
Power consumption 10
Potential equalization 10
Overvoltage protection 10

Performance characteristics 10
Response time 10
Reference operating conditions 10
Resolution 10
Total performance 10
Measurement uncertainty for small absolute pressure measuring ranges 12
Total error 12
Long-term stability 12
Response time 12
Warm-up time 13

Mounting 13
Mounting position 13
Mounting instructions 13

Environment 13
Ambient temperature range 13
Storage temperature 15
Operating height 15
Climate class 15
Degree of protection 15
Pollution degree 15
Vibration resistance 15
Shock resistance 15
Electromagnetic compatibility (EMC) 15

Process 15
Process temperature 15
Process pressure range 16
Cleaned of oil and grease 16

Mechanical construction 17
Design, dimensions 17
Dimensions 18
Weight 36
Materials 36
Surface roughness 36

User interface 36
Operation concept 36
Languages 37
LED indicator 37
Onsite display 38
Remote operation 39
System integration 39
Supported operating tools 39

Certificates and approvals 39
Hygienic design compliance 39
Compliance with requirements derived from cGMP 40
TSE (BSE) compliance (ADI free - Animal Derived Ingredients) 40
ASME BPE 40

Order information 40
Identification 40
Service 41

Application packages 41
Heartbeat Technology 41

Accessories 42
Device-specific accessories 42
DeviceCare SFE100 42
FieldCare SFE500 43
Device Viewer 43
Field Xpert SMT70 43
Field Xpert SMT77 43
SmartBlue app 43

Documentation 43
Standard documentation 43
Supplementary device-dependent documentation 43

Registered trademarks 43

About this document

Symbols

Safety symbols

DANGER
This symbol alerts you to a dangerous situation. Failure to avoid this situation will result in serious or fatal injury.

WARNING
This symbol alerts you to a potentially dangerous situation. Failure to avoid this situation can result in serious or fatal injury.

CAUTION
This symbol alerts you to a potentially dangerous situation. Failure to avoid this situation can result in minor or medium injury.

NOTICE
This symbol alerts you to a potentially harmful situation. Failure to avoid this situation can result in damage to the product or something in its vicinity.

Communication-specific symbols

Bluetooth®:
Wireless data transmission between devices over a short distance

Symbols for certain types of information

Permitted:

Procedures, processes or actions that are permitted.

Forbidden:

Procedures, processes or actions that are forbidden.

Additional information:

Reference to documentation:

Reference to page:

Series of steps: 1., 2., 3.

Result of an individual step:

Symbols in graphics

Item numbers: 1, 2, 3 ...

Series of steps: 1., 2., 3.

Views: A, B, C, ...

List of abbreviations

PN
Nominal pressure

DTM
Device Type Manager

Operating tool

The term "operating tool" is used in place of the following operating software:
- FieldCare / DeviceCare, for operation via HART communication and PC
- SmartBlue app, for operation using an Android or iOS smartphone or tablet

PLC
Programmable logic controller (PLC)

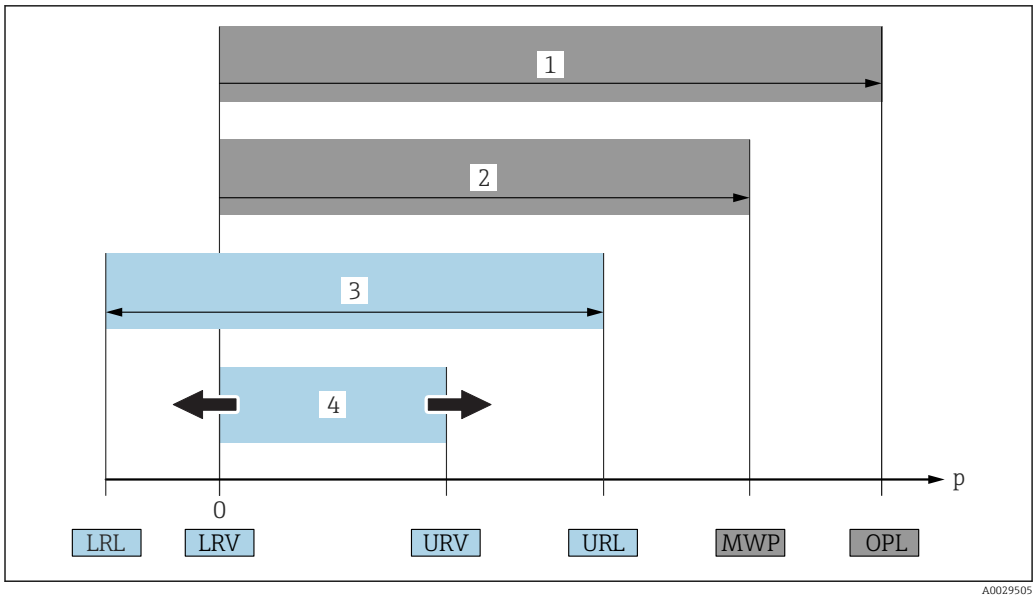

1 OPL: The OPL (overpressure limit) for the device depends on the lowest-rated element, with regard to pressure, of the selected components, i.e. the process connection must be taken into consideration in addition to the measuring cell. Observe pressure-temperature dependency. The OPL may only be applied for a short period of time.

2 MWP: The MWP (maximum working pressure) for the measuring cells depends on the lowest-rated element, with regard to pressure, of the selected components, i.e. the process connection also has to be taken into consideration besides the measuring cell. Observe pressure-temperature dependency. The maximum working pressure may be applied at the device for an unlimited period of time. The maximum working pressure can be found on the nameplate.

3 The maximum measuring range corresponds to the span between the LRL and URL. This measuring range is equivalent to the maximum span that can be calibrated/adjusted.

4 The calibrated/adjusted span corresponds to the span between the LRV and URV. Factory setting: 0 to URL. Other calibrated spans can be ordered as customized spans.

p Pressure
LRL Lower range limit
URL Upper range limit
LRV Lower range value
URV Upper range value
TD Turn down Example - see the following section.

Turn down calculation

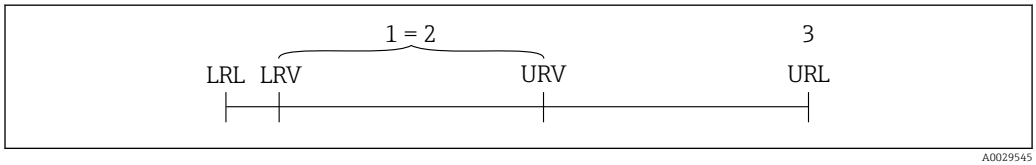

1 Calibrated/adjusted span
2 Zero point-based span
3 Upper range limit

Example:
- Measuring cell: 10 bar (150 psi)
- Upper range limit (URL) = 10 bar (150 psi)
- Calibrated/adjusted span: 0 to 5 bar (0 to 75 psi)
- Lower range value (LRV) = 0 bar (0 psi)
- Upper range value (URV) = 5 bar (75 psi)

$$TD = \frac{URL}{|URV - LRV|}$$

In this example, the TD is therefore 2:1. This measuring span is based on the zero point.

Graphic conventions

- Installation, explosion and electrical connection drawings are presented in simplified format
- Devices, assemblies, components and dimensional drawings are presented in reduced-line format
- Dimensional drawings are not to-scale representations; the dimensions indicated are rounded off to 2 decimal places
- Unless otherwise described, flanges are presented with sealing surface form EN 1092-1; ASME B16.5, RF.

Function and system design

Measuring principle

Metallic membrane

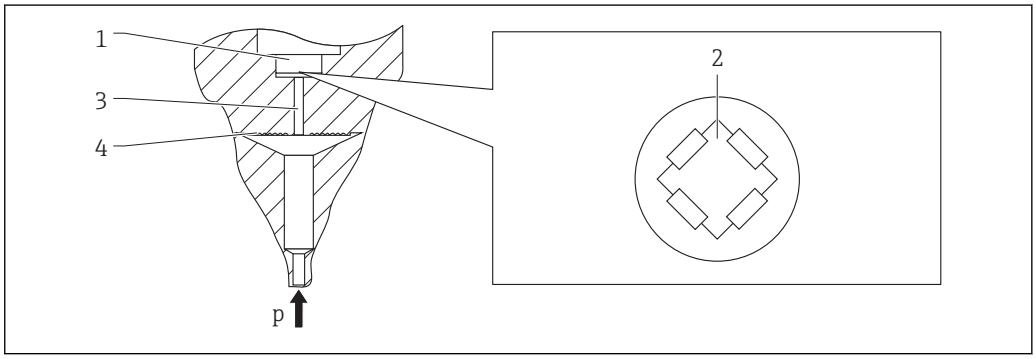

A0016448

1 Measuring element
2 Wheatstone bridge
3 Channel with fill fluid
4 Metallic membrane
p Pressure

The applied pressure deflects the metallic membrane of the measuring cell. A fill fluid transfers the pressure to a Wheatstone bridge (semiconductor technology). The pressure-dependent change in the bridge output voltage is measured and evaluated.

Advantages:
- Can be used for high process temperatures
- Condensate-resistant
- High long-term stability
- High overload resistance

Measuring system

A complete measuring system comprises:

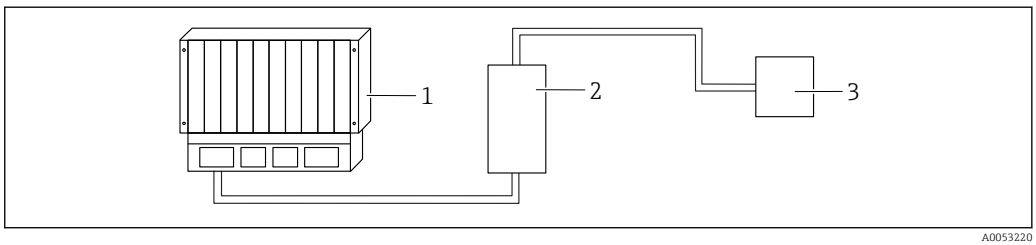

A0053220

1 PLC (programmable logic controller)
2 RMA42/RIA45 (if necessary)
3 Device

Communication and data processing

- 4 to 20 mA with superimposed digital communication protocol HART, 2-wire
- Bluetooth (optional)

Reliability

IT security

Our warranty is valid only if the product is installed and used as described in the Operating Instructions. The product is equipped with security mechanisms to protect it against any inadvertent changes to the settings.

IT security measures, which provide additional protection for the product and associated data transfer, must be implemented by the operators themselves in line with their security standards.

Device-specific IT security

The device offers specific functions to support protective measures by the operator. These functions can be configured by the user and guarantee greater in-operation safety if used correctly. The user role can be changed with an access code (applies to operation via the onsite display, Bluetooth or FieldCare, DeviceCare, Asset Management Tools e.g. AMS, PDM)

Access via Bluetooth® wireless technology

Secure signal transmission via Bluetooth® wireless technology uses an encryption method tested by the Fraunhofer Institute.

- Without the SmartBlue app, the device is not visible via Bluetooth® wireless technology.
- Only one point-to-point connection is established between the device and a smartphone or tablet.
- The Bluetooth® wireless technology interface can be disabled via onsite operation (optional) or SmartBlue.

Input

Measured variable

Measured process variables

- Absolute pressure
- Gauge pressure

Calculated process variables

- Pressure
- Scaled variable

Measuring range

Depending on the device configuration, the maximum working pressure (MWP) and the overpressure limit (OPL) can deviate from the values in the tables.

Absolute pressure

Measuring cell	Maximum measuring range		Smallest factory-calibratable span	
	lower (LRL)	upper (URL)	Standard	Platinum
	[bar (psi)]	[bar (psi)]	[bar (psi)]	
400 mbar (6 psi)	0	+0.4 (+6)	0.05 (0.75) [1]	80 mbar (1.2 psi)
1 bar (15 psi)	0	+1 (+15)	0.05 (0.75) [2]	200 mbar (3 psi)
2 bar (30 psi)	0	+2 (+30)	0.10 (1.50) [2]	400 mbar (6 psi)
4 bar (60 psi)	0	+4 (+60)	0.20 (3.00) [2]	800 mbar (12 psi)
10 bar (150 psi)	0	+10 (+150)	0.50 (7.50) [2]	2 bar (30 psi)
40 bar (600 psi)	0	+40 (+600)	2.00 (30.0) [2]	8 bar (120 psi)
100 bar (1 500 psi)	0	+100 (+1500)	5.00 (73) [2]	20 bar (300 psi)

1) Largest factory-configurable turn down: 8:1
2) Largest factory-configurable turn down: 20:1

Absolute pressure

Measuring cell	MWP	OPL	Factory settings [1]
	[bar (psi)]	[bar (psi)]	
400 mbar (6 psi)	1 (14.5)	1.6 (23)	0 to 400 mbar (0 to 6 psi)
1 bar (15 psi)	2.7 (39)	4 (58)	0 to 1 bar (0 to 15 psi)
2 bar (30 psi)	6.7 (97)	10 (145)	0 to 2 bar (0 to 30 psi)
4 bar (60 psi)	10.7 (155)	16 (232)	0 to 4 bar (0 to 60 psi)
10 bar (150 psi)	25 (362)	40 (580)	0 to 10 bar (0 to 150 psi)
40 bar (600 psi)	100 (1450)	160 (2320)	0 to 40 bar (0 to 600 psi)
100 bar (1500 psi)	103.5 (1500)	160 (2320)	0 to 100 bar (0 to 1500 psi)

1) Different measuring ranges (e.g.–1 to +5 bar (–15 to +75 psi)) can be ordered with customized settings. It is possible to invert the output signal (LRV = 20 mA; URV = 4 mA). Prerequisite: URV < LRV

Gauge pressure

Measuring cell	Maximum measuring range		Smallest factory-calibratable span [1]	
	lower (LRL)	upper (URL)	Standard	Platinum
	[bar (psi)]	[bar (psi)]	[bar (psi)]	
400 mbar (6 psi)	–0.4 (–6)	+0.4 (+6)	0.05 (0.75) [2]	80 mbar (1.2 psi)
1 bar (15 psi)	–1 (–15)	+1 (+15)	0.05 (0.75) [3]	200 mbar (3 psi)
2 bar (30 psi)	–1 (–15)	+2 (+30)	0.10 (1.50) [3]	400 mbar (6 psi)
4 bar (60 psi)	–1 (–15)	+4 (+60)	0.20 (3.00) [3]	800 mbar (12 psi)
10 bar (150 psi)	–1 (–15)	+10 (+150)	0.50 (7.50) [3]	2 bar (30 psi)
25 bar (375 psi)	–1 (–15)	+25 (+375)	1.25 (18.50) [3]	5 bar (75 psi)
40 bar (600 psi)	–1 (–15)	+40 (+600)	2.00 (30.00) [3]	8 bar (120 psi)
100 bar (1500 psi)	–1 (–15)	+100 (+1500)	5.00 (73) [3]	20 bar (300 psi)

1) Largest factory-configurable turn down: 5:1.
2) Largest factory-configurable turn down: 8:1
3) Largest factory-configurable turn down: 20:1

Gauge pressure

Measuring cell	MWP	OPL	Factory settings [1]
	[bar (psi)]	[bar (psi)]	
400 mbar (6 psi)	1 (14.5)	1.6 (23)	0 to 400 mbar (0 to 6 psi)
1 bar (15 psi)	2.7 (39)	4 (58)	0 to 1 bar (0 to 15 psi)
2 bar (30 psi)	6.7 (97)	10 (145)	0 to 2 bar (0 to 30 psi)
4 bar (60 psi)	10.7 (155)	16 (232)	0 to 4 bar (0 to 60 psi)
10 bar (150 psi)	25 (363)	40 (580)	0 to 10 bar (0 to 150 psi)
25 bar (375 psi)	25.8 (375)	100 (1450)	0 to 25 bar (0 to 375 psi)
40 bar (600 psi)	100 (1450)	160 (2320)	0 to 40 bar (0 to 600 psi)
100 bar (1500 psi)	103.5 (1500)	160 (2320)	0 to 100 bar (0 to 1500 psi)

1) Different measuring ranges (e.g.–1 to +5 bar (–15 to +75 psi)) can be ordered with customized settings. It is possible to invert the output signal (LRV = 20 mA; URV = 4 mA). Prerequisite: URV < LRV

Output

Output signal

- 4 to 20 mA with superimposed digital communication protocol HART, 2-wire
- The current output offers a choice of three different operating modes:
  - 4 to 20.5 mA
  - NAMUR NE 43: 3.8 to 20.5 mA (factory setting)
  - US mode: 3.9 to 20.5 mA

Signal on alarm for devices with current output

Current output
Signal on alarm in accordance with NAMUR recommendation NE 43.
- Max. alarm: can be set from 21.5 to 23 mA
- Min. alarm: < 3.6 mA (factory setting)

Onsite display and operating tool via digital communication
Status signal (according to NAMUR Recommendation NE 107):
Plain text display

Load

In order to guarantee sufficient terminal voltage, a maximum load resistance R_L (including line resistance) must not be exceeded, depending on the supply voltage U of the supply unit.

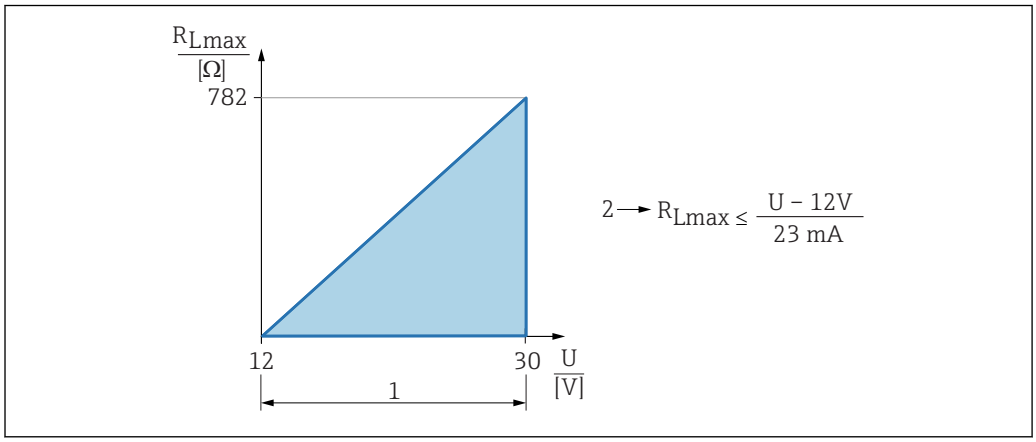

1 Power supply 12 to 30 V
2 R_{Lmax} maximum load resistance
U Supply voltage

If load is too great:
- Failure current is indicated and error message is displayed (indication: MIN alarm current)
- Periodic checking to establish if it is possible to quit fault state

Operation via handheld terminal or PC with operating program: take minimum communication resistor of 250 Ω into consideration.

Damping

A damping affects all continuous outputs.
Factory setting: 1 s (can be configured from 0 to 999 s)

Ex connection data

See the separate technical documentation (Safety Instructions (XA)) on www.endress.com/download.

Protocol-specific data

Manufacturer ID:
17(0x0011)

Device type ID:
0x11C5

Device revision:
1

HART specification:
7.6

DD version:
1

Device description files (DTM, DD)
Information and files at:
- www.endress.com
  On the product page for the device: Documents/Software → Device drivers
- www.fieldcommgroup.org

HART load:
Min. 250 Ω

The following measured values are assigned to the device variables at the factory:

Device variable	Measured value
Primary variable (PV) [1]	Pressure [2]
Secondary variable (SV)	Sensor temperature
Tertiary variable (TV)	Electronics temperature
Quaternary variable (QV)	Sensor pressure [3]

1) The PV is always applied to the current output.
2) The pressure is the calculated signal after damping and position adjustment.
3) The Sensor pressure is the raw signal of the measuring cell before damping and position adjustment.

Choice of HART device variables
- Pressure
- Scaled variable
- Sensor temperature
- Sensor pressure
- Electronics temperature
- Terminal current [1]
- Terminal voltage [1]
- Median of pressure signal [1]
- Noise of pressure signal [1]
- Signal noise detected [1]
- Percent of range
- Loop current
- Not used

Energy supply

Terminal assignment

2-wire

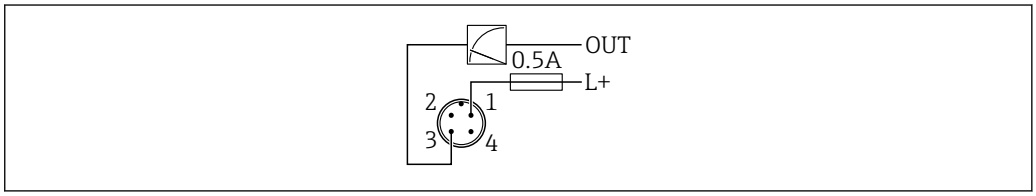

A0052662

1 Supply voltage L+, brown wire (BN)
3 OUT (L-), blue wire (BU)

Available device plugs

M12 plug

For further information, see the "Device-specific accessories" section

1) Visible depending on the order options or device settings

Supply voltage

12 to 30 V_{DC} on a direct current power unit

The power unit must be tested to ensure it meets safety requirements (e.g. PELV, SELV, Class 2) and must comply with the relevant protocol specifications.

For 4 to 20 mA the same requirements apply as for HART. A galvanically isolated active barrier must be used for devices approved for use in explosion hazardous areas.

A suitable circuit breaker should be provided for the device in accordance with IEC/EN 61010-1.

Protective circuits against reverse polarity, HF influences and overvoltage peaks are installed.

Power consumption

Non-hazardous area: To meet device safety specifications according to the IEC/EN 61010 standard, the installation must ensure that the maximum current is limited to 500 mA.

Potential equalization

If necessary, establish potential equalization using the process connection or the grounding clamp supplied by the customer.

Overvoltage protection

The device satisfies the IEC/DIN EN 61326-1 product standard (Table 2 Industrial environment). Depending on the type of connection (DC power supply, input line, output line), different test levels are used to prevent transient overvoltages (IEC/DIN EN 61000-4-5 Surge) in accordance with IEC/DIN EN 61326-1: Test level for DC power supply lines and IO lines: 1000 V wire to ground.

Overvoltage category

In accordance with IEC/DIN EN 61010-1, the device is intended for use in networks with overvoltage protection category II.

Performance characteristics

Response time

- HART: acyclic: min. 330 ms, typically 590 ms (depending on commands and number of preambles)
- HART: Cyclic (burst): min. 160 ms, typically 350 ms (depending on commands and number of preambles)

Reference operating conditions

- As per IEC 62828-2
- Ambient temperature T_A = constant, in the range of +21 to +33 °C (+70 to +91 °F)
- Humidity φ = constant, in the range of: 5 to 80 % RH ± 5 %
- Atmospheric pressure p_U = constant, in the range of: 860 to 1060 mbar (12.47 to 15.37 psi)
- Load with HART: 250 Ω
- Supply voltage: 24 V_{DC} ±3 V_{DC}
- Position of the measuring cell: horizontal ±1°
- Input of LOW SENSOR TRIM and HIGH SENSOR TRIM for lower range value and upper range value
- Zero based span
- Turn down (TD) = URL/ | URV - LRV |

Resolution

Current output: < 1 µA

Total performance

The performance characteristics refer to the accuracy of the device. The factors influencing accuracy can be divided into two groups:
- Total performance of device
- Installation factors

All of the performance characteristics meet the requirement of ≥ ± 3 sigma.

The total performance of the device comprises the reference accuracy and the ambient temperature effect and is calculated using the following formula:

Total performance = $\pm \sqrt{((E1)^2 + (E2)^2)}$

E1 = Reference accuracy

E2 = Temperature effect

Calculation of E2:

Temperature effect per ±28 °C (50 °F)

(corresponds to a range of −3 to +53 °C (+27 to +127 °F))

$E2 = E2_M + E2_E$

$E2_M$ = Main temperature error

$E2_E$ = Electronics error

The values refer to the calibrated span. The measuring span is based on the zero point.

Reference accuracy [E1]

The reference accuracy comprises the non-linearity according to the limit point method, pressure hysteresis and non-repeatability in accordance with [IEC 61298-2].

Platinum not for flush-mounted process connections Clamp DN22, G ½.

Measuring cell	Standard	Platinum
400 mbar (6 psi)	TD 1:1 = ±0.2 % TD > 1:1 to 10:1 = ±0.5 % · TD	-
1 bar (15 psi)	TD 1:1 = ±0.1 % TD > 1:1 to 10:1 = ±0.3 % · TD	TD 1:1 = ±0.1 % TD > 1:1 to 10:1 = ±0.2 % · TD
2 bar (30 psi)	TD 1:1 to 5:1 = ±0.1 % TD > 5:1 to 10:1 = ±0.2 %	TD 1:1 to 5:1 = ±0.075 % TD > 5:1 to 10:1 = ±0.1 %
4 bar (60 psi) 10 bar (150 psi) 25 bar (375 psi)	TD 1:1 to 10:1 = ±0.1 % TD > 10:1 to 20:1 = ±0.2 %	TD 1:1 to 10:1 = ±0.075 % TD > 10:1 to 20:1 = ±0.1 %
40 bar (600 psi)	TD 1:1 to 10:1 = ±0.1 % TD > 10:1 to 20:1 = ±0.3 %	TD 1:1 to 5:1 = ±0.075 % TD > 5:1 to 10:1 = ±0.15 %
100 bar (1 500 psi)	TD 1:1 to 10:1 = ±0.1 % TD > 10:1 to 20:1 = ±0.2 %	TD 1:1 to 10:1 = ±0.075 % TD > 10:1 to 20:1 = ±0.15 %

Temperature effect [E2]

$E2_M$ - Main temperature error

The output changes due to the effect of the ambient temperature [IEC 62828-1] with respect to the reference temperature [DIN 62828-1]. The values specify the maximum error due to min./max. ambient or process temperature conditions.

Application feature: Process temperature +100 °C (+212 °F), process temperature +130 °C (+266 °F) (+150 °C (+302 °F) max. 1h), process temperature +150 °C (+302 °F)

- 400 mbar (6 psi) measuring cell
  - Process connection Clamp 1", DIN11851 DN25, Neumo BioControl DN25, NPT 3/4", NPT 1", G1" flush mount, G1" with O-ring, G1" with sealing taper, Aseptoflex: ±(1.05 % · TD + 0.10 %)
  - Process connection SMS 1", Ingold connection: ±(1.55 % · TD + 0.10 %)
  - Process connection MNPT1/2 bore 11.4 mm, MPNT1/2 FNPT1/4, G1/2" EN837, G1/2 bore 11.4 mm, M20 x 1.5: ±(0.20 % · TD + 0.10 %)
  - All other process connections: ±(0.63 % · TD + 0.10 %)
- 1 bar (15 psi) measuring cell
  - Process connection Clamp 1", DIN11851 DN25, Neumo BioControl DN25, NPT 3/4", NPT 1", G1" flush mount, G1" with O-ring, G1" with sealing taper, Aseptoflex: ±(0.42 % · TD + 0.10 %)
  - Process connection SMS 1", Ingold connection: ±(0.62 % · TD + 0.10 %)
  - All other process connections: ±(0.25 % · TD + 0.10 %)
- 2 bar (30 psi) measuring cell
  - Process connection SMS 1", Ingold connection: ±(0.35 % · TD + 0.10 %)
  - All other process connections: ±(0.25 % · TD + 0.10 %)
- 4 bar (60 psi), 10 bar (150 psi), 25 bar (375 psi), 40 bar (600 psi)and 100 bar (1 500 psi) measuring cell
  ±(0.20 % · TD + 0.10 %

Application feature: Process temperature +200 °C (+392 °F)
- 400 mbar (6 psi) measuring cell
  - Process connection Clamp 1", Clamp 1 1/2", DIN11851 DN25, Neumo BioControl DN25, NPT 3/4", NPT 1", G1" flush mount, G1" with O-ring, G1" with sealing taper, Aseptoflex: ±(1.47 % · TD + 0.10 %)
  - Process connection SMS 1": ±(1.75 % · TD + 0.10 %)
  - All other process connections: ±(0.63 % · TD + 0.10 %)
- 1 bar (15 psi) measuring cell
  - Process connection Clamp 1", DIN 11851 DN25, Neumo BioControl DN25, NPT 3/4", NPT 1", G1" flush mount, G1" installation, G1" with sealing taper: ±(0.59 % · TD + 0.10 %)
  - Process connection SMS 1", Ingold connection: ±(0.7 % · TD + 0.10 %)
  - All other process connections: ±(0.25 % · TD + 0.10 %)
- 2 bar (30 psi) measuring cell
  - Process connection SMS 1": ±(0.4 % · TD + 0.10 %)
  - All other process connections: ±(0.25 % · TD + 0.10 %)
- 4 bar (60 psi), 10 bar (150 psi), 25 bar (375 psi), 40 bar (600 psi)and 100 bar (1500 psi) measuring cell
  ±(0.20 % · TD + 0.10 %

$E2_E$ - Electronics error

Digital output: 0%

Measurement uncertainty for small absolute pressure measuring ranges

The smallest expanded measurement uncertainty that can be passed on by our measurement standards:
- In the range of 1 to 30 mbar (0.0145 to 0.435 psi): 0.4 % of reading
- In the range of < 1 mbar (0.0145 psi): 1 % of reading

Total error

The total error of the device comprises the total performance and the long-term stability effect and is calculated using the following formula:

Total error = total performance + long-term stability

Long-term stability

The specifications refer to the upper range limit (URL).
- 1 year: ±0.2 %
- 5 years: ±0.4 %
- 10 years: ±0.5 %
- 15 years: ±0.6 %

Response time

Dead time, time constant

Representation of dead time and time constant as per IEC62828-1:

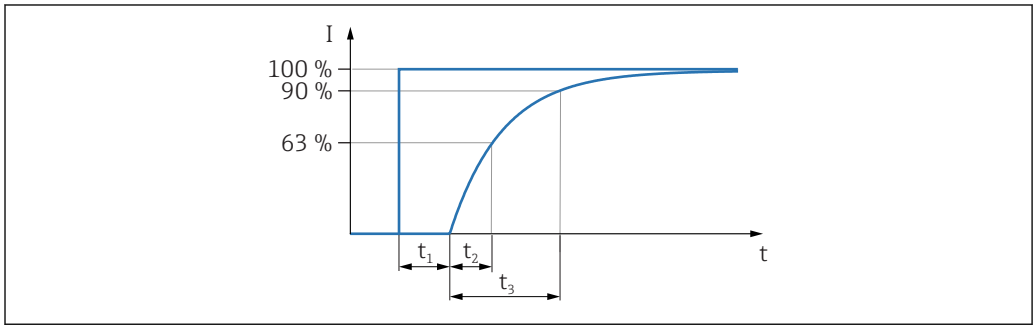

A0019786

Step response time = dead time (t_1) + time constant T90 (t_3) according to IEC62828-1

Dynamic behavior, current output
- Dead time (t_1): maximum 50 ms
- Time constant T63 (t2): maximum 60 ms
- Time constant T90 (t3): maximum 100 ms

Warm-up time

The warm-up time (in accordance with IEC 62828-4) indicates the time required for the device to reach its maximum accuracy or performance after the supply voltage is energized.

Warm-up time: ≤ 10 s

Mounting

Mounting position

The orientation depends on the measuring application and can cause a zero point shift (when the vessel is empty, the measured value does not show zero). The zero point shift can be corrected electronically with the device.

Mounting instructions

- During installation, it is important to ensure that the sealing element used has a permanent operating temperature that corresponds to the maximum temperature of the process
- Devices are suitable for use in wet environments in accordance with IEC/DIN EN 61010-1
- The devices are mounted according to the same guidelines as manometers
- Protect housing against impact
- Devices with CSA approval are intended for indoor use

Environment

Ambient temperature range

–40 to +85 °C (–40 to +185 °F)

The permitted ambient temperature is reduced at higher process temperatures.

The following information only takes into account functional aspects. Additional restrictions may apply for certified device versions.

The permitted process temperature varies, depending on the process connection used. For an overview of the process connections, see Section "Process temperature range".

Maximum process temperature +130 °C (+266 °F)

(Product feature "Application"; order option "B")

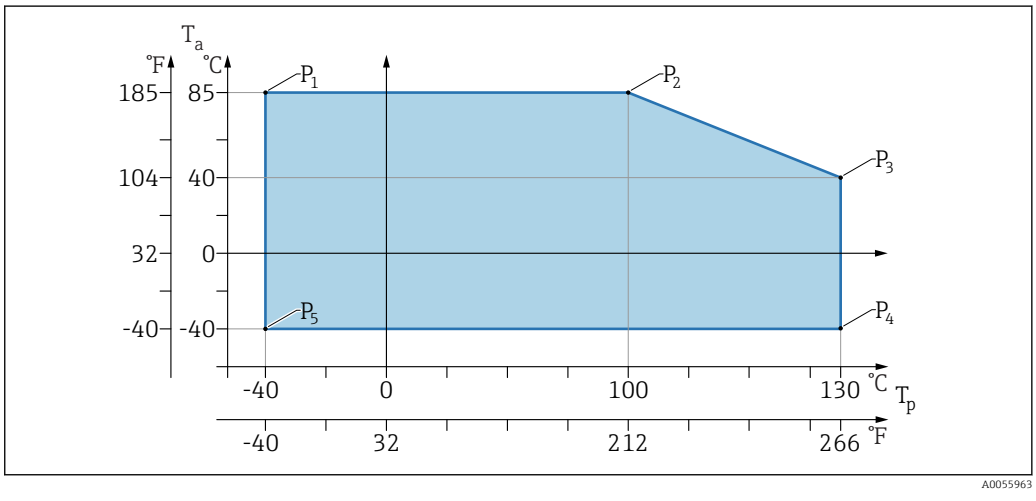

1 *Ambient temperature T_a depending on the process temperature T_p*

P	T_p	T_a
P1	–40 °C (–40 °F)	+85 °C (+185 °F)
P2	+100 °C (+212 °F)	+85 °C (+185 °F)
P3	+130 °C (+266 °F)	+40 °C (+77 °F)

P	T_p	T_a
P4	+130 °C (+266 °F)	−40 °C (−40 °F)
P5	−40 °C (−40 °F)	−40 °C (−40 °F)

Maximum process temperature +150 °C (+302 °F)

(Product feature "Application"; order option "C")

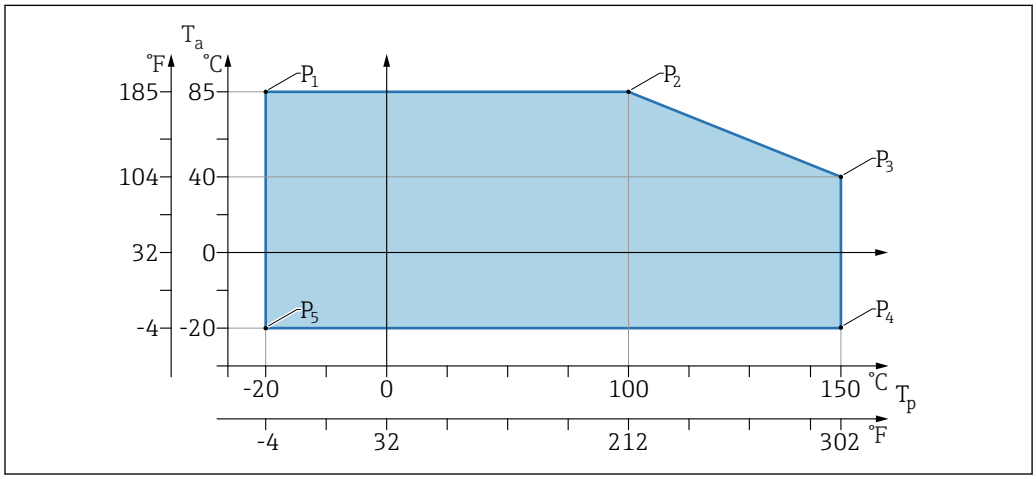

2 *Ambient temperature T_a depending on the process temperature T_p*

P	T_p	T_a
P1	−20 °C (−4 °F)	+85 °C (+185 °F)
P2	+100 °C (+212 °F)	+85 °C (+185 °F)
P3	+150 °C (+302 °F)	+40 °C (+77 °F)
P4	+150 °C (+302 °F)	−20 °C (−4 °F)
P5	−20 °C (−4 °F)	−20 °C (−4 °F)

Maximum process temperature +200 °C (+392 °F)

(Product feature "Application"; order option "D")

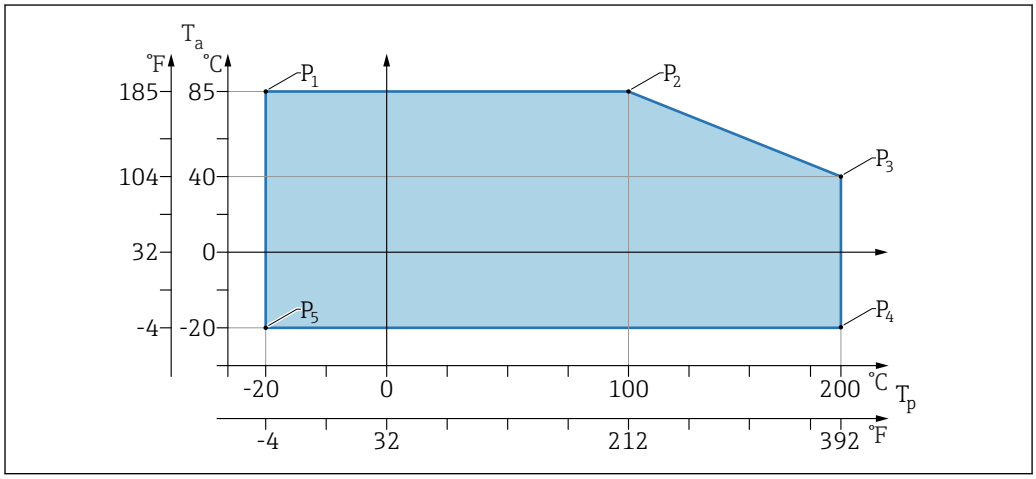

3 *Ambient temperature T_a depending on the process temperature T_p*

P	T_p	T_a
P1	−20 °C (−4 °F)	+85 °C (+185 °F)
P2	+100 °C (+212 °F)	+85 °C (+185 °F)
P3	+200 °C (+392 °F)	+40 °C (+77 °F)
P4	+200 °C (+392 °F)	−20 °C (−4 °F)
P5	−20 °C (−4 °F)	−20 °C (−4 °F)

Storage temperature

−40 to +85 °C (−40 to +185 °F)

Operating height

Up to 5 000 m (16 404 ft) above sea level

Climate class

According to IEC 60068-2-38 test Z/AD (relative humidity 4 to 100 %).

Degree of protection

Test as per IEC 60529 Edition 2.2 2013-08/ DIN EN 60529:2014-09 and NEMA 250-2014

For mounted M12 connecting cable: IP66/68/69, NEMA type 4X/6P

/IP68,: (1.83 mH_2O for 24 h))

Pollution degree

Pollution degree 2 according to IEC/EN 61010-1.

Vibration resistance

- Stochastic noise (random sweep) according to IEC/DIN EN 60068-2-64 Case 2
- Guaranteed for 5 to 2 000 Hz: 1.25 $(m/s^2)^2/Hz$, ~ 5 g
- Sinusoidal vibration according to IEC 62828-1:2017 with 10 to 60 Hz ±0.35 mm; 60 to 1 000 Hz 5 g

Shock resistance

- Testing standard: IEC/DIN EN 60068-2-27 Case 2
- Shock resistance: 30 g (18 ms) in all 3 axes

Electromagnetic compatibility (EMC)

- Electromagnetic compatibility as per IEC/DIN EN 61326 series and NAMUR recommendation EMC (NE21)
- Maximum deviation under interference influence: < 0.5 %

For more details refer to the EU Declaration of Conformity.

Process

Process temperature

Maximum process temperature	Version [1]
+100 °C (+212 °F)	A
+130 °C (+266 °F)(+150 °C (+302 °F) [2])	B
+150 °C (+302 °F)	C
+200 °C (+392 °F)	D

1) Product Configurator, "Application" feature
2) Temperature for maximum one hour (device in operation but not within measurement specification)

Fill fluid

Fill fluid	Process temperature range	Version [1]
Synthetic oil, FDA	−40 to +130 °C (−40 to +266 °F)(+150 °C (+302 °F) [2])	3
Vegetable oil, FDA	−20 to +200 °C (−4 to +392 °F)	4

1) Product Configurator, "Fill fluid" feature
2) Temperature for one hour maximum (device in operation but not within measurement specification)

Process pressure range

Pressure specifications

⚠ WARNING

The maximum pressure for the device depends on the lowest-rated component with regard to pressure (components are: process connection, optional mounted parts or accessories).

- Only operate the device within the specified limits for the components!
- MWP (maximum working pressure): The maximum working pressure is specified on the nameplate. This value refers to a reference temperature of +20 °C (+68 °F) and may be applied to the device for an unlimited time. Note temperature dependence of maximum working pressure. For higher temperatures, refer to the following standards for the permitted pressure values for flanges:EN 1092-1 (materials 1.4435 and 1.4404 are identical with regard to their stability/ temperature property and are grouped together in under 13E0 in EN 1092-1 Tab. 18; the chemical composition of the two materials can be identical), ASME B 16.5a (the latest version of the standard applies in each case).
- The overpressure limit is the maximum pressure that a device may be subjected to during a test. It exceeds the maximum working pressure by a certain factor. This value refers to a reference temperature of +20 °C (+68 °F).
- In the case of sensor range and process connection combinations where the overpressure limit (OPL) of the process connection is less than the nominal value of the measuring cell, the device is set at the factory, at the very maximum, to the OPL value of the process connection. If the entire measuring cell range must be used, select a process connection with a higher OPL value (1.5 x MWP; MWP = PN).
- The Pressure Equipment Directive (2014/68/EU) uses the abbreviation "PS". The abbreviation "PS" corresponds to the maximum working pressure of the device.
- For maximum working pressure data that deviate from this, see the "Mechanical construction" section.

Cleaned of oil and grease

Endress+Hauser also offers devices, cleaned of oil and grease, for special applications. No special restrictions regarding the process conditions apply to these devices.

Mechanical construction

Design, dimensions

Device height

The device height is calculated from
- the height of the housing (1)
- configuration-dependent mounted parts (2)
- the height of the relevant process connection (3)

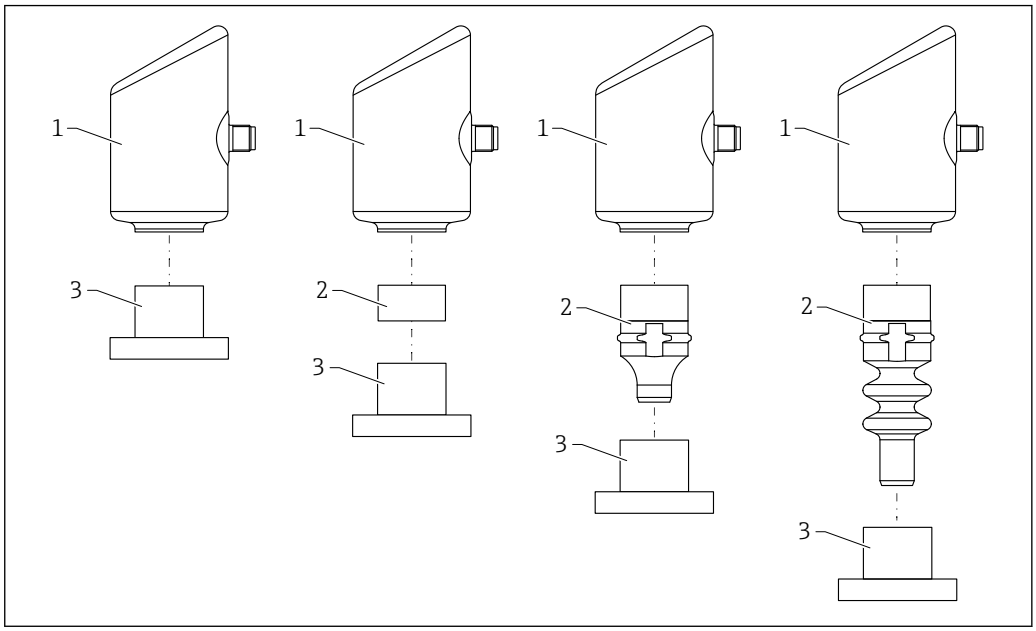

1 Housing
2 Configuration-dependent mounted parts
3 Process connection

The individual heights of the components are listed in the following sections. To calculate the device height, add the individual heights of the components.

Dimensions

Housing

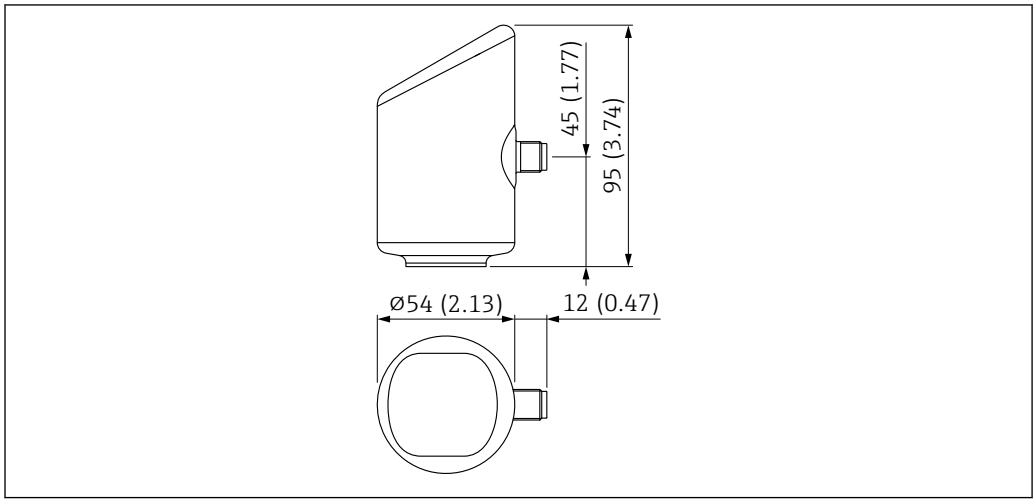

A0052415

Unit of measurement mm (in)

Important information on the process connections

The design of some process connections is determined by the selection of the following features in the product structure:

- Application feature:
  - Process temperature +100 °C (+212 °F)
  - Process temperature +130 °C (+266 °F), +150 °C (+302 °F) max. 1h
  - Process temperature +150 °C (+302 °F)
  - Process temperature +200 °C (+392 °F)
- "Surface refinement" feature:
  - Standard
  - Hygienic RA 0.38µm/15µin electropolished

These features are described for the relevant process connection if they are required.

Explanation of terms

- DN or NPS = alphanumeric designation of a component
- PN or Class = alphanumeric pressure rating of a component
- d_M: membrane diameter (see following graphic)

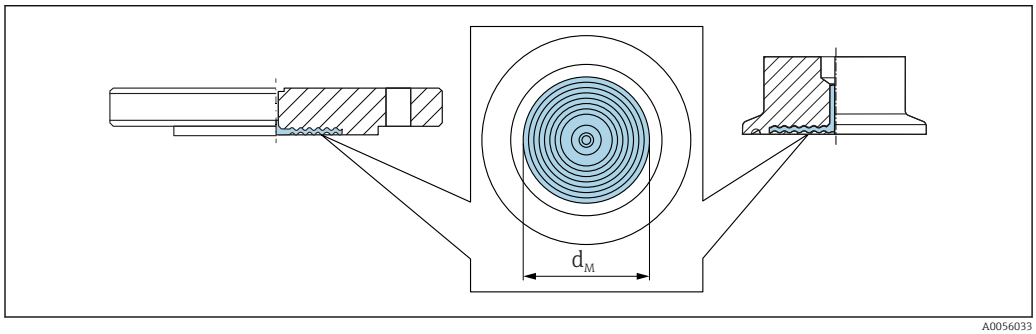

A0056033

Thread ISO 228 G, internal membrane

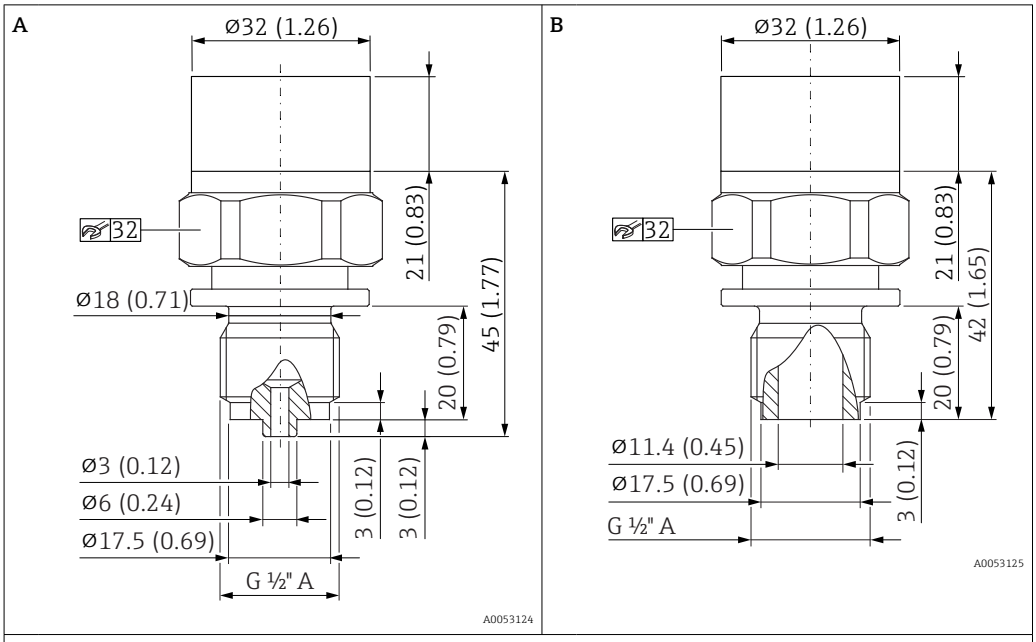

Unit mm (in)

Designation	Graphic	Weight [kg (lb)]	Order option
Thread ISO 228 G ½" A, EN 837	A	0.22 (0.49)	WBJ
Thread ISO 228 G ½" A, bore 11.4 mm (0.45 in)	B		WWJ

Thread DIN13, internal membrane

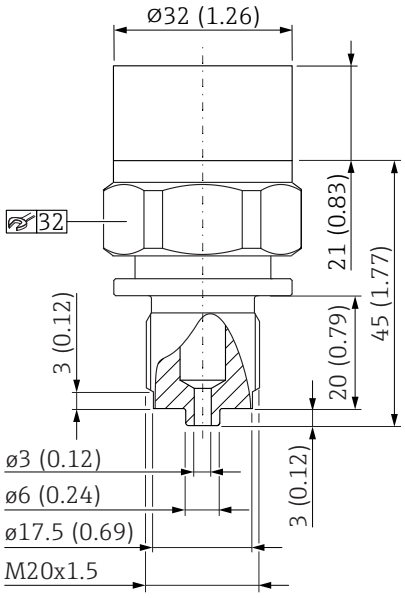

Unit mm (in)

Designation	Weight	Order option
	[kg (lb)]	
DIN 13 M20 x 1.5, EN 837, bore 3 mm (0.12 in)	0.22 (0.49)	X4J

Thread ASME, internal membrane

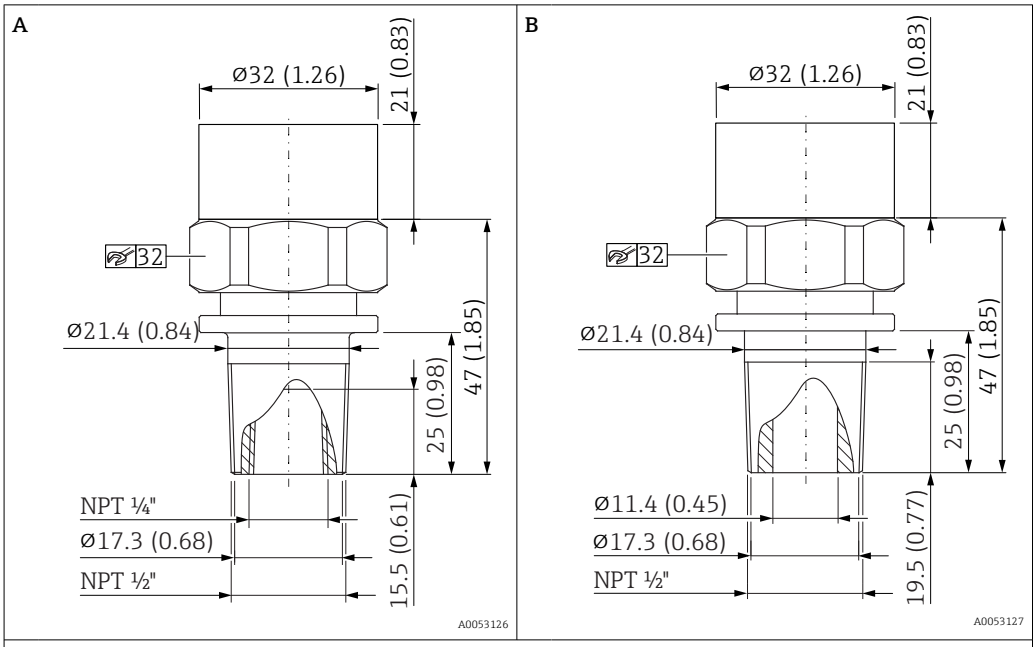

Unit mm (in)

Designation	Graphic	Weight	Order option
		[kg (lb)]	
ASME ½" MNPT, ¼" FNPT (internal)	A	0.23 (0.51)	VXJ
ASME ½" MNPT, bore 11.4 mm (0.45 in)	B		VWJ

Thread ISO 228 G, flush membrane

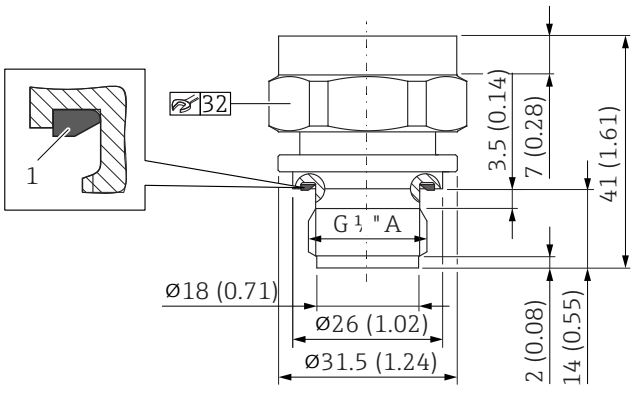

1 FKM form seal, pre-assembled

Unit mm (in)

Designation	d_M	Weight	Order option
	[mm (in)]	[kg (lb)]	
Thread ISO 228 G ½" A DIN3852, form E	17.2 (0.68)	0.14 (0.31)	WJJ

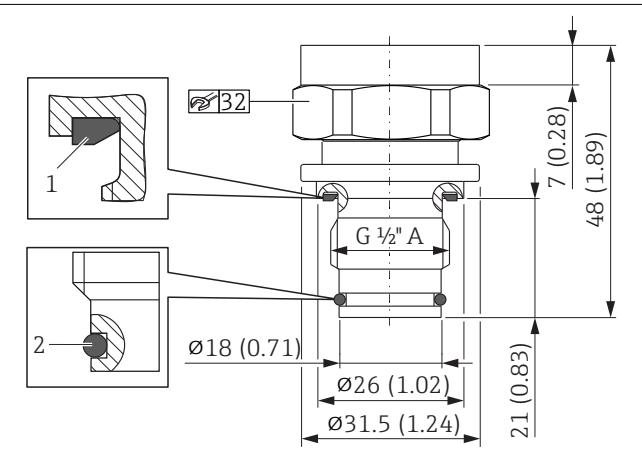

1 FKM form seal, pre-assembled
2 FKM O-ring, pre-assembled

Unit mm (in)

Designation	d_M	Weight	Order option
	[mm (in)]	[kg (lb)]	
Thread ISO 228 G ½" A O-ring seal, flush-mounted	17.2 (0.68)	0.15 (0.33)	WUJ

Thread MNPT, flush membrane

A

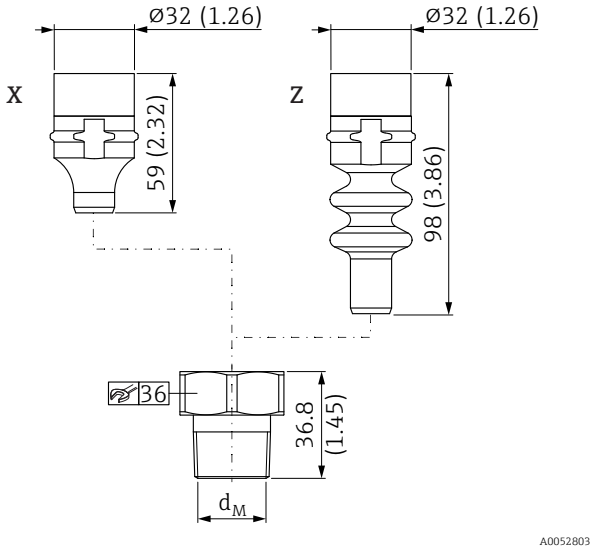

X Maximum process temperature +150 °C (+302 °F)
Z Maximum process temperature +200 °C (+392 °F)

B

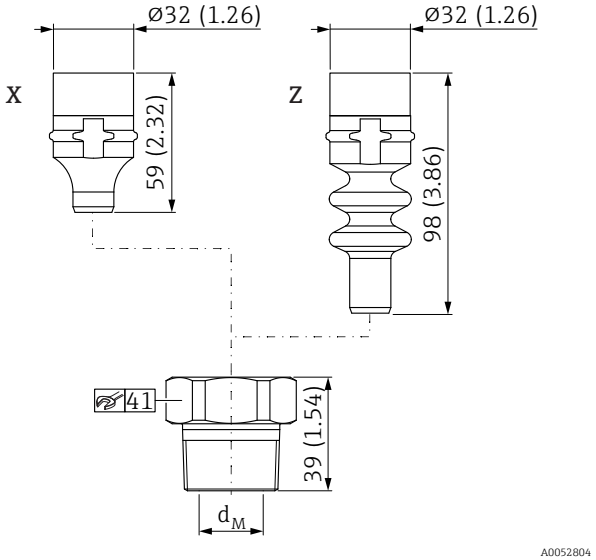

X Maximum process temperature +150 °C (+302 °F)
Z Maximum process temperature +200 °C (+392 °F)

C

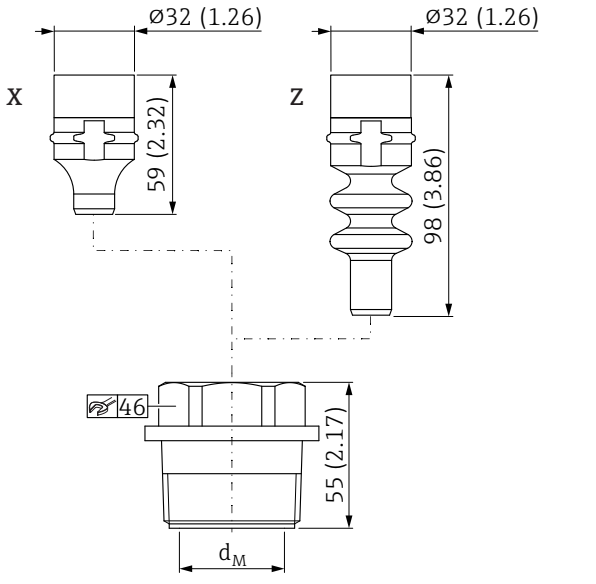

X Maximum process temperature +150 °C (+302 °F)
Z Maximum process temperature +200 °C (+392 °F)

D

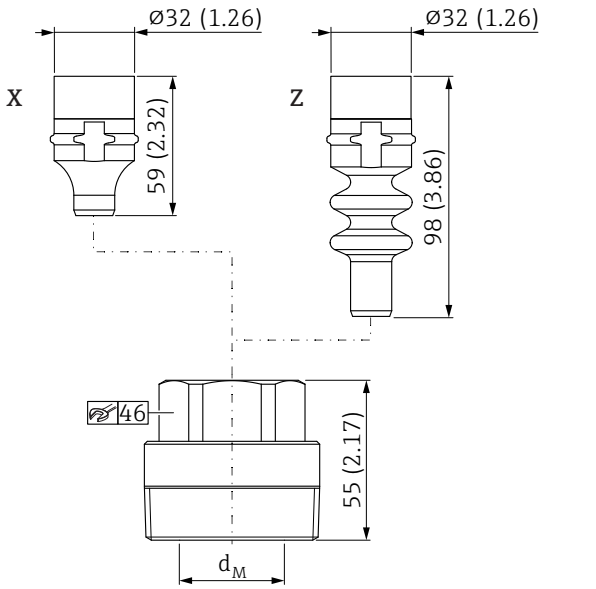

X Maximum process temperature +150 °C (+302 °F)
Z Maximum process temperature +200 °C (+392 °F)

Unit mm (in)

Designation	Graphic	d_M	Weight	Order option
		[mm (in)]	[kg (lb)]	
MNPT 3/4"	A	22 (0.87)	0.22 (0.49)	VHJ
MNPT 1"	B	28 (1.10)	0.33 (0.73)	VJJ
MNPT 1 1/2"	C	41 (1.61)	0.73 (1.61)	VLJ
MNPT 2"	D	48 (1.89)	1.05 (2.32)	VMJ

Thread G1, G 1 1/2, G2, flush membrane

A

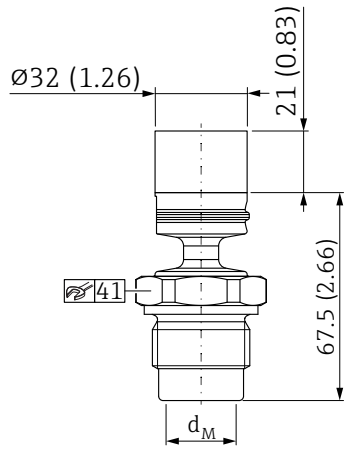

B

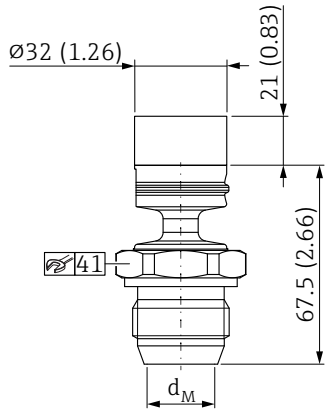

Unit mm (in)

Designation	Graphic	d_M	Weight	Order option
		[mm (in)]	[kg (lb)]	
G1" with O-ring	A	22 (0.87)	0.42 (0.93)	WSJ
G1" with sealing taper	B		0.39 (0.86)	WQJ

C

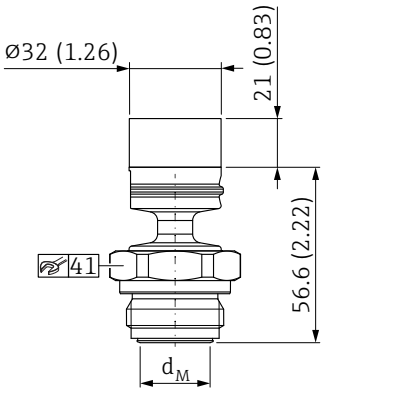

D

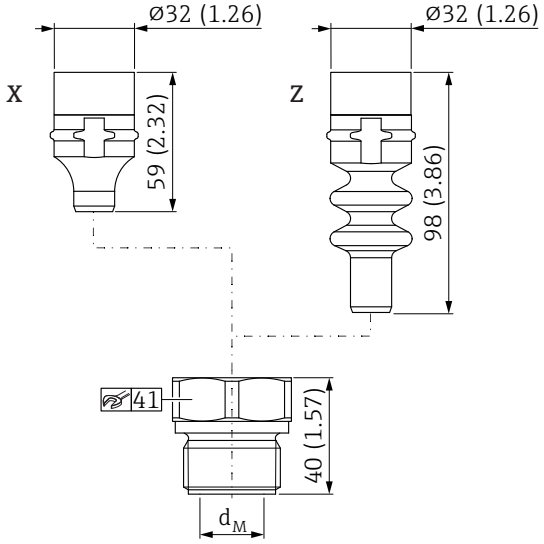

X Maximum process temperature +150 °C (+302 °F)
Z Maximum process temperature +200 °C (+392 °F)

Unit mm (in)

Designation	Graphic	d_M	Weight	Order option
		[mm (in)]	[kg (lb)]	
G1" with Aseptoflex O-ring made from EPDM	C	22 (0.87)	0.35 (0.77)	45J
G1"	D	28 (1.10)	0.34 (0.75)	WLJ

E

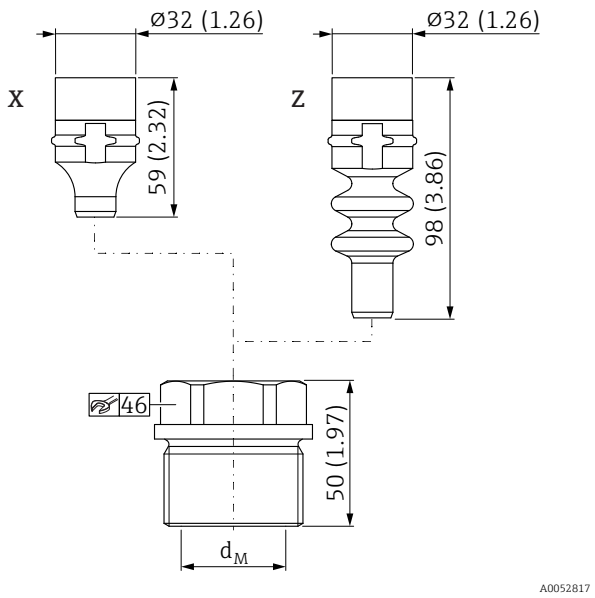

X Maximum process temperature +150 °C (+302 °F)
Z Maximum process temperature +200 °C (+392 °F)

F

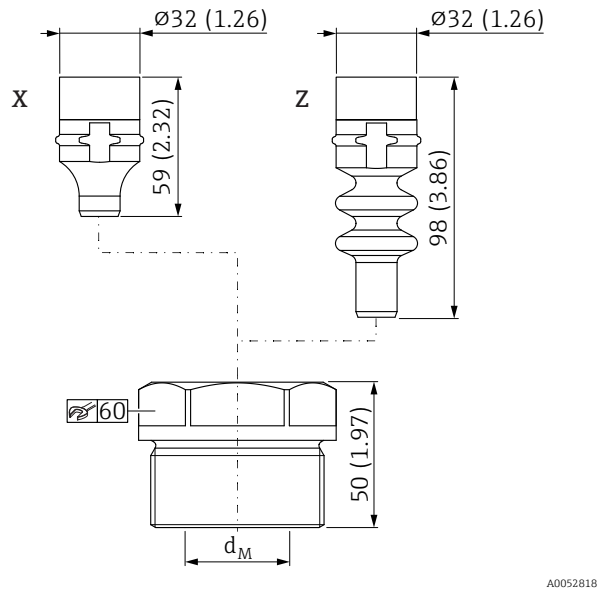

X Maximum process temperature +150 °C (+302 °F)
Z Maximum process temperature +200 °C (+392 °F)

Unit mm (in)

Designation	Graphic	d_M	Weight	Order option
		[mm (in)]	[kg (lb)]	
G1 1/2"	E	41 (1.61)	0.72 (1.59)	WNJ
G2"	F	48 (1.89)	1.17 (2.58)	WPJ

DIN11851, flush membrane

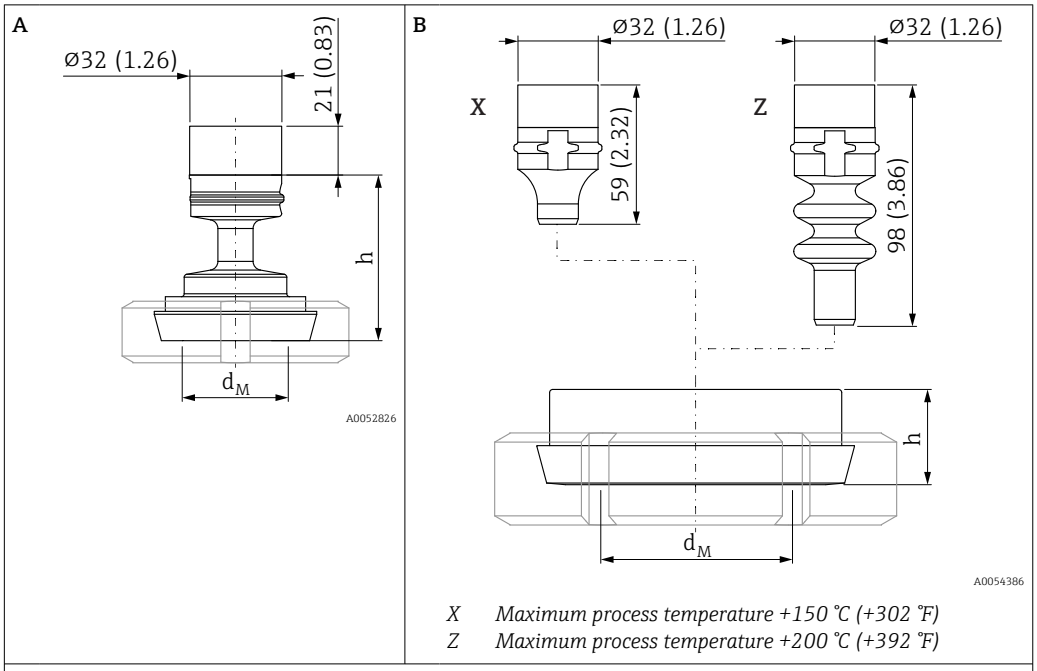

X Maximum process temperature +150 °C (+302 °F)
Z Maximum process temperature +200 °C (+392 °F)

Unit mm (in)

Designation	PN	Graphic	d_M	h	Weight kg	Order option
	[bar]		[mm (in)]	[mm (in)]	[kg (lb)]	
DIN11851 DN25	40	A	22 (0.87)	44 (1.73)	0.43 (0.95)	1GJ
DIN11851 DN32	40	A	32 (1.26)	57 (2.24)	0.55 (1.21)	1HJ
DIN11851 DN40	40	A	36 (1.42)	57 (2.24)	0.61 (1.35)	1JJ
DIN11851 DN50	25	A		57 (2.24)	0.76 (1.68)	1DJ
DIN11851 DN80	25	B	61 (2.4)	30 (1.18)	1.9 (4.19)	1FJ

Clamp ISO2852 DN18-22, DIN32676 DN15-20, flush membrane

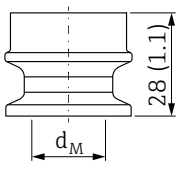

Unit mm (in)

Designation	PN	d_M	Weight	Order option
	[bar]	[mm (in)]	[kg (lbs)	
Clamp ISO2852 DN18-22, DIN32676 DN15-20,	40	17.2 (0.68)	0.09 (0.20)	3AJ

Tri-Clamp ISO2852, flush membrane

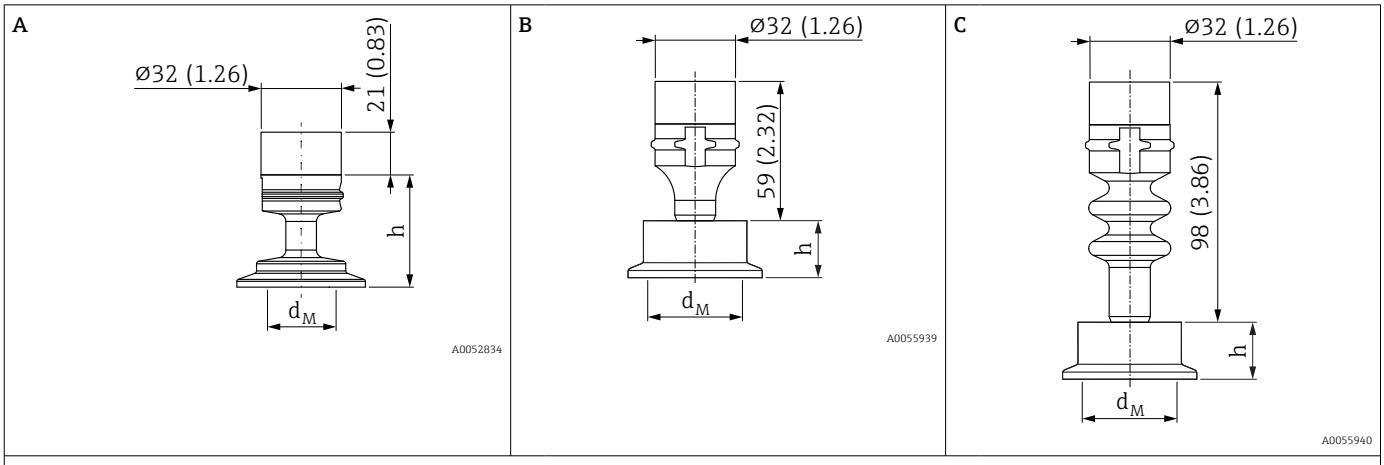

Unit mm (in)

Maximum process temperature +130 °C (+266 °F) (+150 °C (+302 °F) for 1 hour) Maximum process temperature +150 °C (+302 °F)							
Designation	**PN**	**Surface**	**Graphic**	**d_M**	**h**	**Weight**	**Order option**
	[bar]			**[mm (in)]**	**[mm (in)]**	**[kg (lb)]**	
Tri-Clamp ISO2852 DN25 (1")	40	Standard	A	22 (0.87)	44 (1.73)	0.21 (0.46)	3BJ
		Electropolished	A				
Tri-Clamp ISO2852 DN38 (1 ½")		Standard	A	32 (1.26)		0.21 (0.46)	3CJ
		Electropolished	A				
Tri-Clamp ISO2852 DN51 (2")		Standard	A	36 (1.42)		0.26 (0.57)	3EJ
		Electropolished	A				
Tri-Clamp ISO2852 DN63.5 (2 ½")		Standard	A	36 (1.42)		0.33 (0.73)	3JJ
		Electropolished	B	61 (2.4)	30 (1.18)		
Tri-Clamp ISO2852 DN76.1 (3")		Standard	A	36 (1.42)	44 (1.73)	0.42 (0.93)	3FJ
		Electropolished	B	61 (2.4)	30 (1.18)		

Maximum process temperature +200 °C (+392 °F)							
Designation	**PN**	**Surface**	**Graphic**	**d_M**	**h**	**Weight**	**Order option**
	[bar]			**[mm (in)]**	**[mm (in)]**	**[kg (lb)]**	
Tri-Clamp ISO2852 DN25 (1")	40	Standard	C	22 (0.87)	30 (1.18)	0.32 (0.71)	3BJ
		Electropolished	C	22 (0.87)			
Tri-Clamp ISO2852 DN38 (1 ½")		Standard	C	36 (1.42)		1 (2.21)	3CJ
		Electropolished	C	36 (1.42)			
Tri-Clamp ISO2852 DN51 (2")		Standard	C	41 (1.61)		1.1 (2.43)	3EJ
		Electropolished	C	41 (1.61)			
Tri-Clamp ISO2852 DN63.5 (2 ½")		Standard	C	61 (2.4)		0.7 (1.54)	3JJ
Tri-Clamp ISO2852 DN76.1 (3")		Standard	C	61 (2.4)		1.2 (2.65)	3FJ

Varivent, flush membrane

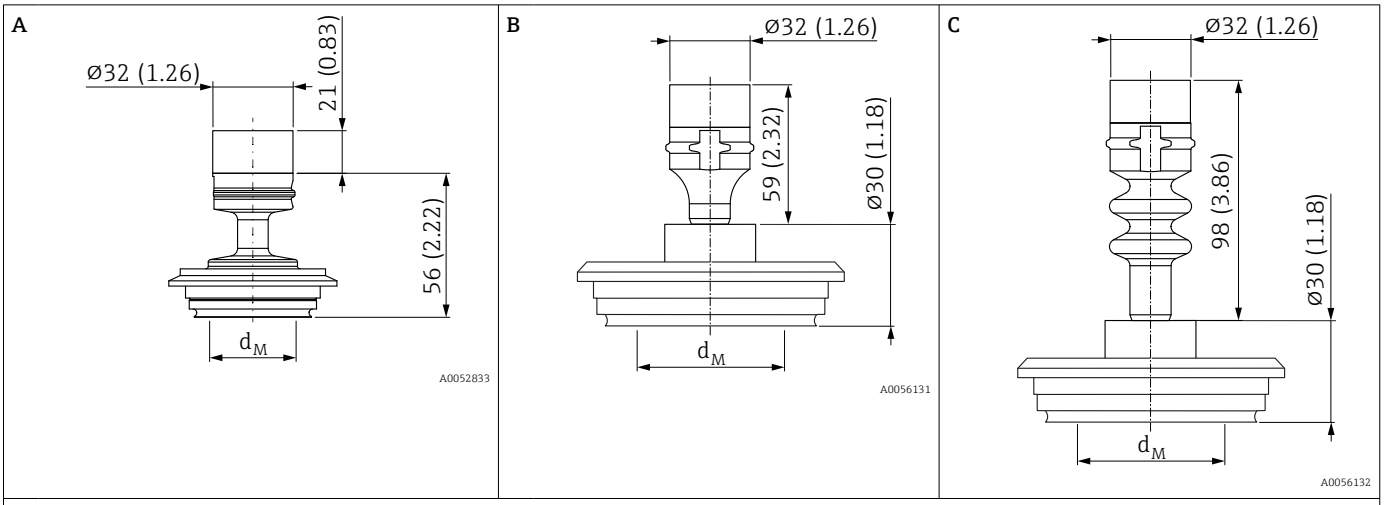

Unit mm (in)

Maximum process temperature +130 °C (+266 °F) (+150 °C (+302 °F) for 1 hour) Maximum process temperature +150 °C (+302 °F)						
Designation	**PN**	**Surface**	**Graphic**	**d_M**	**Weight**	**Order option**
	[bar]			**[mm (in)]**	**[kg (lb)]**	
Varivent F for DN25 - DN32 pipes	40	Standard	A	36 (1.42)	0.47 (1.04)	41J
		Electropolished	B		0.7 (1.54)	
Varivent N for DN40 - DN162 pipes		Standard	A		0.74 (1.63)	42J
		Electropolished	B	61 (2.4)	0.9 (1.98)	

Maximum process temperature +200 °C (+392 °F)					
Designation	**PN**	**Graphic**	**d_M**	**Weight**	**Order option**
	[bar]		**[mm (in)]**	**[kg (lb)]**	
Varivent F for DN25 - DN32 pipes	40	C	36 (1.42)	0.4 (0.88)	41J
Varivent N for DN40 - DN162 pipes		C	61 (2.4)	0.8 (1.76)	42J

DRD, flush membrane

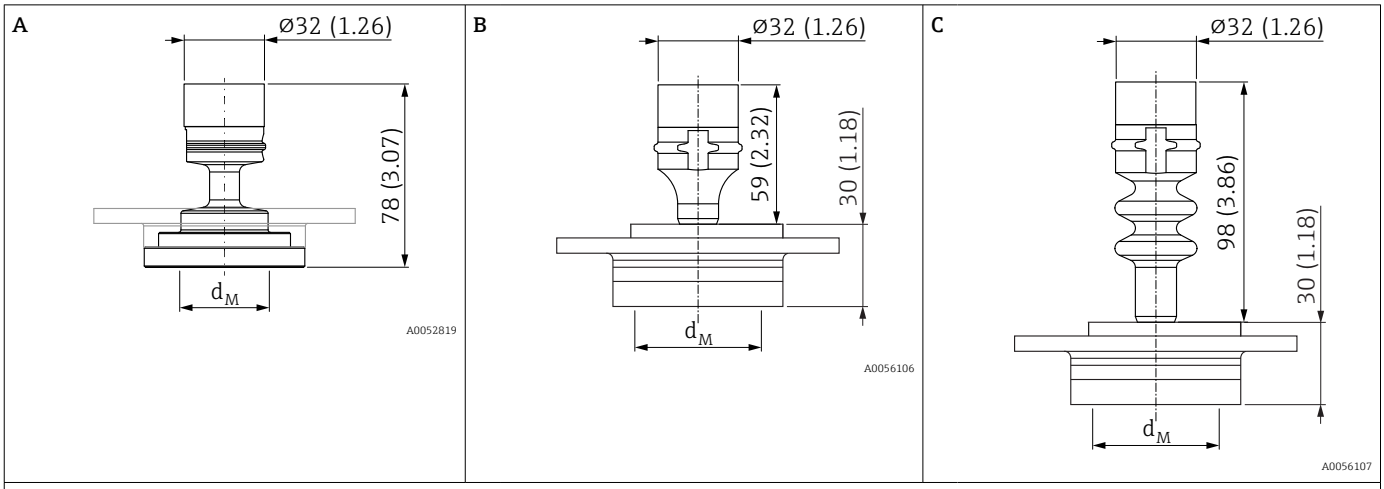

Unit mm (in)

Maximum process temperature +130 °C (+266 °F) (+150 °C (+302 °F) for 1 hour) Maximum process temperature +150 °C (+302 °F)						
Designation	**PN**	**Surface**	**Graphic**	**d_M**	**Weight kg**	**Order option**
	[bar]			**[mm (in)]**	**[kg (lb)]**	
DRD 65 mm	25	Standard	A	36 (1.42)	0.48 (1.06)	4AJ
		Electropolished	B	48 (1.89)	0.65 (1.43)	

Maximum process temperature +200 °C (+392 °F)						
Designation	**PN**	**Surface**	**Graphic**	**d_M**	**Weight kg**	**Order option**
	[bar]			**[mm (in)]**	**[kg (lb)]**	
DRD 65 mm	25	Standard	C	48 (1.89)	0.75 (1.65)	4AJ
		Electropolished	C			

SMS, flush membrane

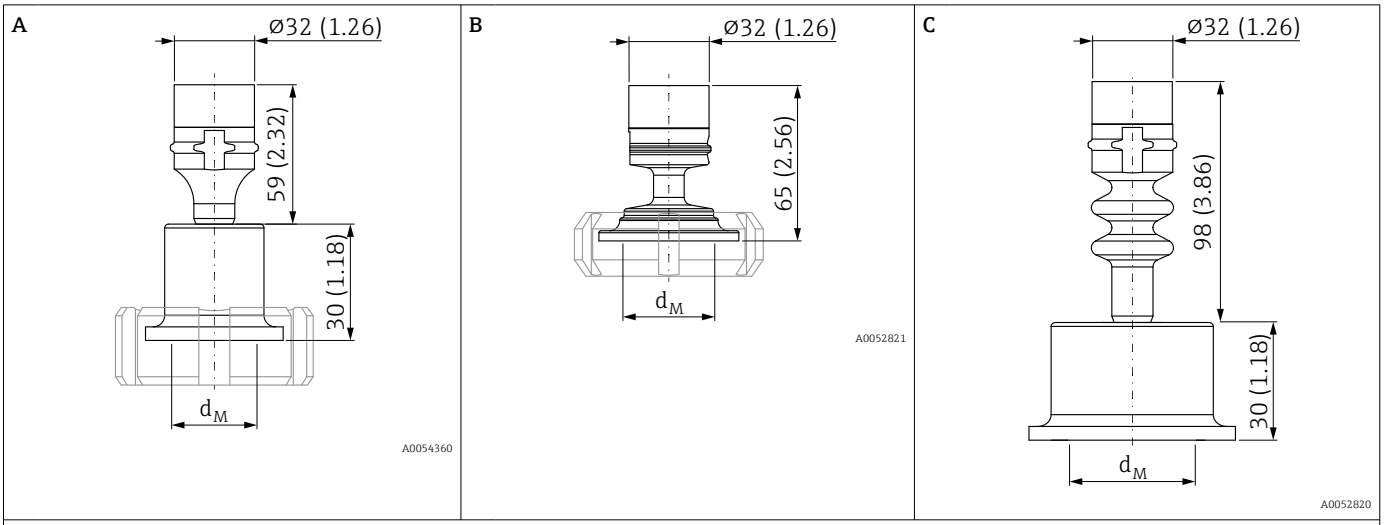

Unit mm (in)

Maximum process temperature +130 °C (+266 °F) (+150 °C (+302 °F) for 1 hour) Maximum process temperature +150 °C (+302 °F)					
Designation	**PN**	**Graphic**	**d_M**	**Weight**	**Order option**
	[bar]		**[mm] (in)**	**[kg (lb)]**	
SMS 1	40	A	22 (0.87)	0.13 (0.29)	4PJ
SMS 1 1/2		B	36 (1.42)	0.25 (0.55)	4QJ
SMS 2		B		0.32 (0.71)	4RJ

Maximum process temperature +200 °C (+392 °F)					
Designation	**PN**	**Graphic**	**d_M**	**Weight**	**Order option**
	[bar]		**[mm] (in)**	**[kg (lb)]**	
SMS 1	40	C	22 (0.87)	0.25 (0.55)	T6J
SMS 1 1/2		C	36 (1.42)	0.65 (1.43)	T7J
SMS 2		C	48 (1.89)	1.05 (2.32)	TXJ

NEUMO BioControl, flush membrane

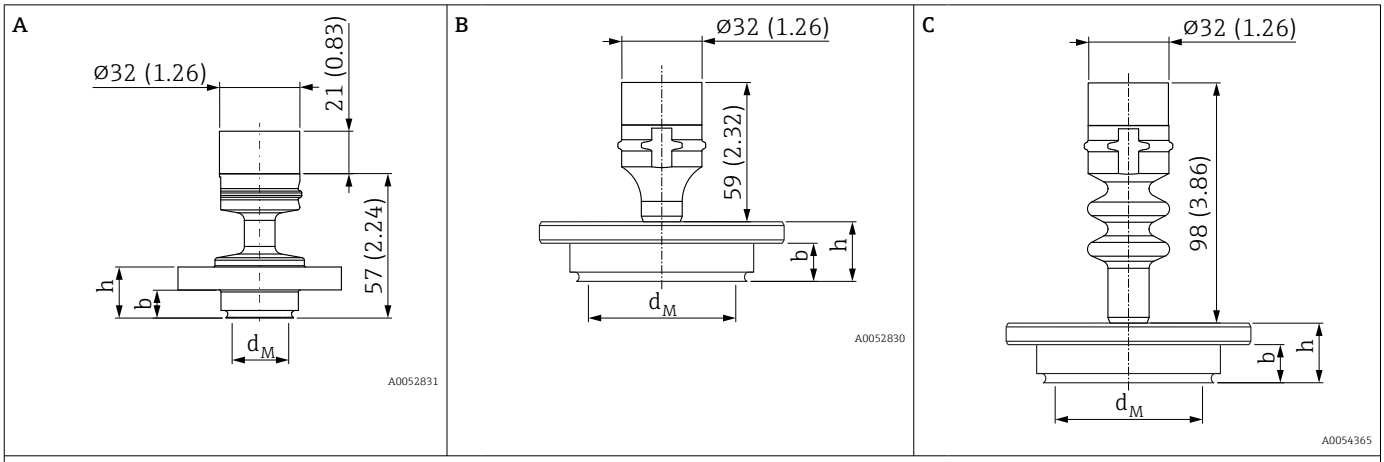

Unit mm (in)

Maximum process temperature +130 °C (+266 °F) (+150 °C (+302 °F) for 1 hour) Maximum process temperature +150 °C (+302 °F)								
Designation	**PN**	**Surface**	**Graphic**	**b**	**h**	**d_M**	**Weight**	**Order option**
	[bar]			**[mm (in)]**	**[mm (in)]**	**[mm (in)]**	**[kg (lb)]**	
NEUMO BioControl D25	16	Standard	A	11 (0.43)	20 (0.79)	22 (0.87)	0.41 (16.1)	5AJ
		Electropolished	B				0.6 (1.32)	
NEUMO BioControl D50		Standard	A	17 (0.67)	27 (1.06)	36 (1.42)	0.86 (1.90)	5DJ
		Electropolished	B			41 (1.61)	1.1 (2.43)	
NEUMO BioControl D80		Standard	B	25 (0.98)	37 (1.46)	61 (2.4)	2.59 (5.71)	5FJ
		Electropolished	B					

Maximum process temperature +200 °C (+392 °F)							
Designation	**PN**	**Graphic**	**b**	**h**	**d_M**	**Weight**	**Order option**
	[bar]		**[mm (in)]**	**[mm (in)]**	**[mm (in)]**	**[kg (lb)]**	
NEUMO BioControl D80	16	C	25 (0.98)	37 (1.46)	61 (2.4)	2.8 (6.17)	5FJ

Ingold connection 25x46, flush membrane

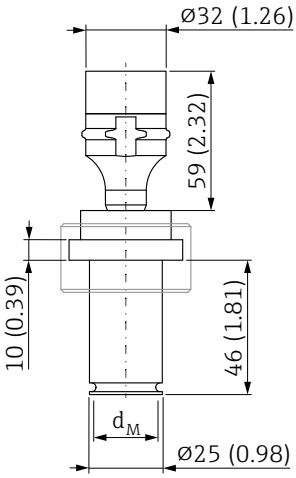

Unit mm (in)

Designation	PN	d_M	Weight	Order option
	[bar]	[mm (in)]	[kg (lb)]	
Ingold connection 25x46 with O-ring made from EPDM	25	22 (0.87)	0.3 (0.66)	5RJ

Universal adapter, flush membrane

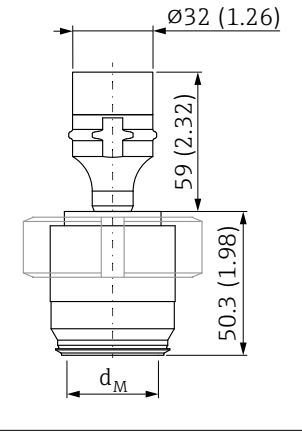

Unit mm (in)

Designation	Seal	PN	d_M	Weight	Order option
		[bar]	[mm (in)]	[kg (lb)]	
Universal adapter	Silicone form seal	10	32 (1.26)	0.54 (1.19)	52J
	EPDM form seal				50J

Tri-Clamp ISO2852 inline seal, flush membrane

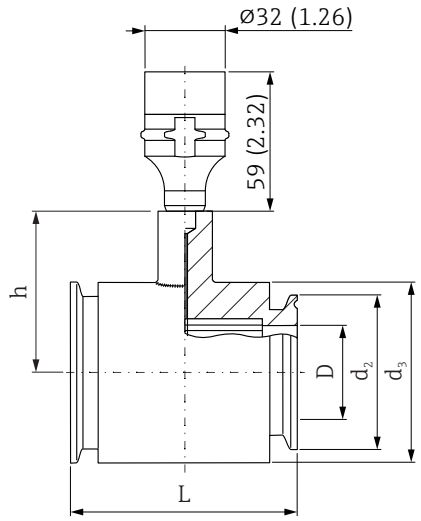

h *Height*
D *Diameter*
d_2 *Diameter*
d_3 *Diameter*
L *Installed length*

Unit mm (in)

DN	NPS	PN	D	d_2	d_3	h	L	Weight	Order option
	[in]	[bar]	[mm]	[mm]	[mm]	[mm]	[mm]	[kg (lb)]	
10	¾	40	10.5	25	34	41.5	140	0.6 (1.32)	3QJ
25	1		22.5	50.5	54	67	126	1.7 (3.75)	3RJ
38	1 ½		35.5	50.5	69	67	126	1.0 (2.21)	3SJ [1]
51	2		48.6	64	78	79	100	1.7 (3.75)	3TJ [1]

1) incl. 3.1 and pressure test in accordance with the Pressure Equipment Directive, category II

Perform CIP (cleaning in place (hot water)) before SIP (sterilization in place (steam)). Frequent use of SIP cleaning increases the stress and strain on the process membrane. Under unfavorable conditions, frequent changes of temperature can lead to process membrane material fatigue and potentially leaks over the long term.

Flange EN1092-1, flush membrane

Connection dimensions according to EN1092-1

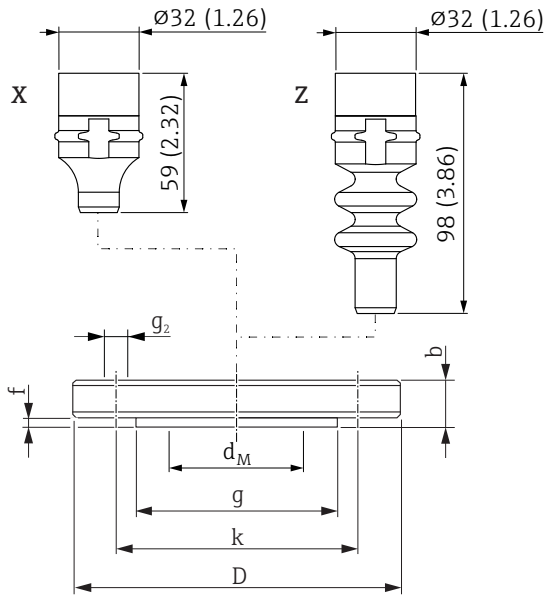

X Maximum process temperature +150 °C (+302 °F)
Z Maximum process temperature +200 °C (+392 °F)
D Diameter of flange
b Thickness
g Diameter of raised face
f Height of raised face
k Pitch diameter
g_2 Diameter of hole

Unit mm (in)

Flange								Order option
DN	PN	Form	D	b	g	f	Ød$_M$	
			[mm]	[mm]	[mm]	[mm]	[mm]	
25	10-40	B1	115	18	68	3	28	H0J
40	10-40	B1	150	18	87		-	E1J
50	10-40	B1	165	20	102		61	H3J
80	10-40	B1	200	24	138		89	H5J

Flange		Boltholes			Weight	Order option
DN	PN	Quantity	g_2	k		
			[mm]	[mm]	[kg (lb)]	
25	10-40	4	14	85	2.1 (4.63)	H0J
40	10-40	4	18	110	2.2 (4.85)	E1J
50	10-40	4	18	125	3.0 (6.62)	H3J
80	10-40	8	18	160	5.3 (11.69)	H5J

Flange ASME, flush membrane

Connection dimensions in accordance with ASME B 16.5, raised face RF

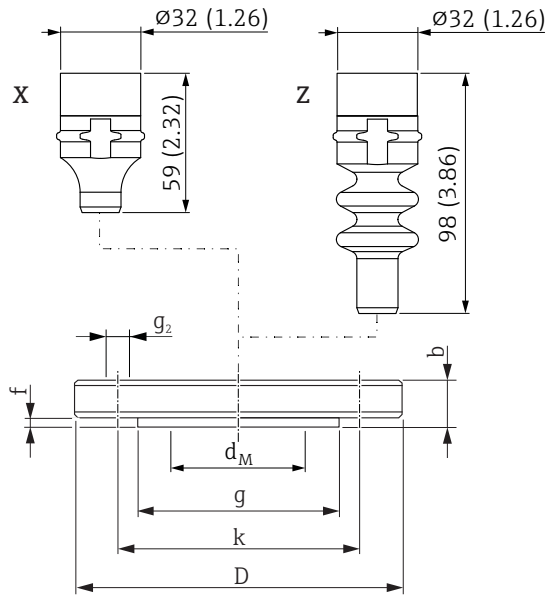

X Maximum process temperature +150 °C (+302 °F)
Z Maximum process temperature +200 °C (+392 °F)
D Diameter of flange
b Thickness
g Diameter of raised face
f Height of raised face
k Pitch diameter
g_2 Diameter of hole

Unit mm (in)

Flange							Order option
NPS	Class	D	b	g	f	Ød$_M$	
[in]	[lb./sq.in]	[in]	[in]	[in]	[in]	[in]	
1	150	4.25	0.56	2	0.06	1.10	AAJ
1 ½	150	5	0.69	2.88		On request	ACJ
2	150	6	0.75	3.62		2.40	ADJ
3	150	7.5	0.94	5		3.50	AFJ

Flange		Boltholes			Weight	Order option
NPS	Class	Quantity	g_2	k		
[in]	[lb./sq.in]		[in]	[in]	[kg (lb)]	
1	150	4	0.62	3.12	1.2 (2.65)	AAJ
1 ½	150	4	0.62	3.88	1.5 (3.31)	ACJ
2	150	4	0.75	4.75	2.2 (4.85)	ADJ
3	150	4	0.75	6	5.1 (11.25)	AFJ

Weight

The weights of the individual components must be added together for the total weight.

Housing weight including electronics and onsite display: 0.43 kg (0.95 lb)

Process connection: See the relevant process connection for weight

Materials

Materials in contact with process

Process connections

- EN flanges:
  - Material: AISI 316L
  - The flange raised face is made of the same material as the membrane.
- ASME flanges:
  - Material AISI 316/316L: Combination of AISI 316 for required pressure resistance and AISI 316L for required chemical resistance (dual rated)
  - The flange raised face is made of the same material as the membrane.
- All other process connections made of 316L

Membrane material

- 316L (1.4435)
- AlloyC276
  The material of the flange raised face is the same as the material as the membrane.

Delta ferrite content

A delta ferrite content of ≤ 3% can be guaranteed and certified for the wetted parts if option "KD" is selected in the "Test, certificate, declaration" order code in the Product Configurator.

Materials not in contact with process

- Housing: 316L (1.4404)
- Display: Polycarbonate
- Device plug: For more information, see section on "Power supply".

Fill fluid

- Synthetic oil as per FDA 21 CFR 178.3620 (b)(1) and NSF H-1
- Vegetable oil, FDA 21 CFR 172.856

Accessories

For technical data (e.g. materials, dimensions or order numbers), see the accessory document SD01553P.

Surface roughness

- Housing: Ra <1.6 µm (63 µin), electropolished
- Wetted parts: Ra < 0.76 µm (29.9 µin) (excluding flanges and threaded process connections)
- Parts in contact with process: hygienic Ra < 0.38 µm (15 µin) electropolished
  (Product feature "Surface refinement", order option "E")

User interface

Operation concept

Operator-oriented menu structure for user-specific tasks

- Guidance
- Diagnostics
- Application
- System

Quick and safe commissioning

- Interactive wizard with graphical interface for guided commissioning in FieldCare/DeviceCare or SmartBlue app
- Menu guidance with brief descriptions of the individual parameter functions
- Standardized operation at the device and in the operating tools

Integrated data memory
Up to 100 event messages recorded in the device

Efficient diagnostics increase measurement reliability.
- Remedial measures are integrated in plain text.
- Wide range of simulation options such as current, error messages, and process variables

Bluetooth (optional)
- Quick and easy setup with the SmartBlue app or FieldXpert SMT70/SMT77
- No additional tools or adapters needed
- Encrypted single point-to-point data transmission (tested by Fraunhofer Institute) and password-protected communication via *Bluetooth*® wireless technology
- The device can be retrofitted with Bluetooth

Languages

The following languages are available on the onsite display.

Operating languages
- English (English is set at the factory if no other language is ordered)
- Deutsch
- Français
- Español
- Italiano
- Nederlands
- Portuguesa
- Polski
- русский язык (Russian)
- Türkçe
- 中文 (Chinese)
- 日本語 (Japanese)
- 한국어 (Korean)
- tiếng Việt (Vietnamese)
- čeština (Czech)
- Svenska

LED indicator

Functions:
- Display of the operating status (operation or fault)
- Display of Bluetooth connection, locking status and function
- Easy setup of the following functions with one button:
  - Locking On/Off
  - Bluetooth On/Off
  - Position adjustment

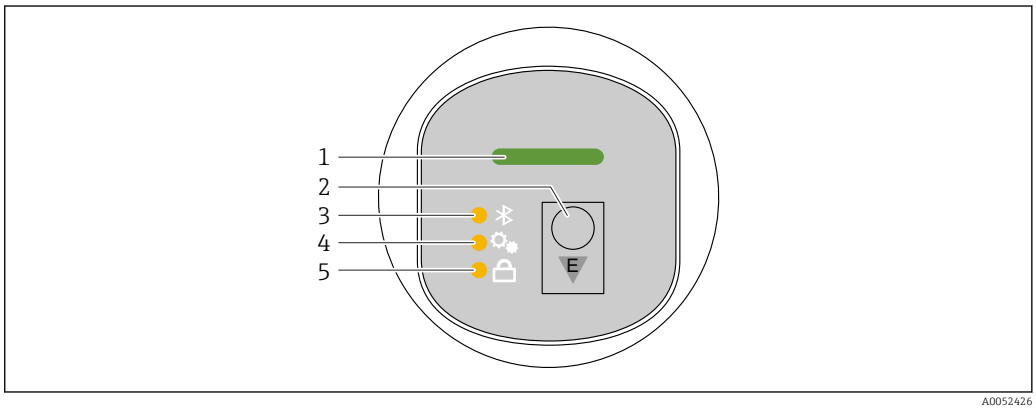

A0052426

1 Operating status LED
2 Operating key "E"
3 Bluetooth LED
4 Position adjustment LED
5 Keypad lock LED

Onsite display

Functions:
- Display measured values, also fault and notice messages
- Display a symbol in the event of an error
- Electronically adjustable onsite display (automatic or manual adjustment of display in 90° increments)
  The measured value display rotates automatically depending on the orientation when the device is started.
- Basic settings via the onsite display with touch control [2)]
  - Locking On/Off
  - Select the operating language
  - Start the Heartbeat Verification with passed/failed feedback message on the onsite display
  - Bluetooth On/Off
  - Commissioning wizard for basic settings
  - Read the device information, such as the name, serial number and firmware version
  - Active diagnosis and status
  - Device reset
  - Invert colors for bright lighting conditions

The following figure is an example. The display depends on the settings of the onsite display.

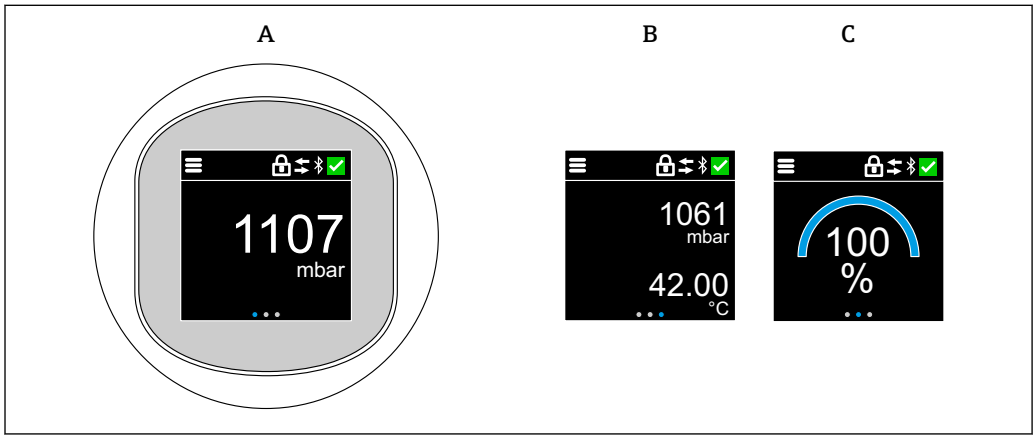

A Standard display: 1 measured value with unit (adjustable)
B 2 measured values, each with unit (adjustable)
C Graphic measured value display in %

The standard display can be permanently set via the operating menu.

2) For devices without touch control, settings can be made using operating tools (FieldCare, DeviceCare, SmartBlue).

Remote operation

Via HART protocol or Bluetooth

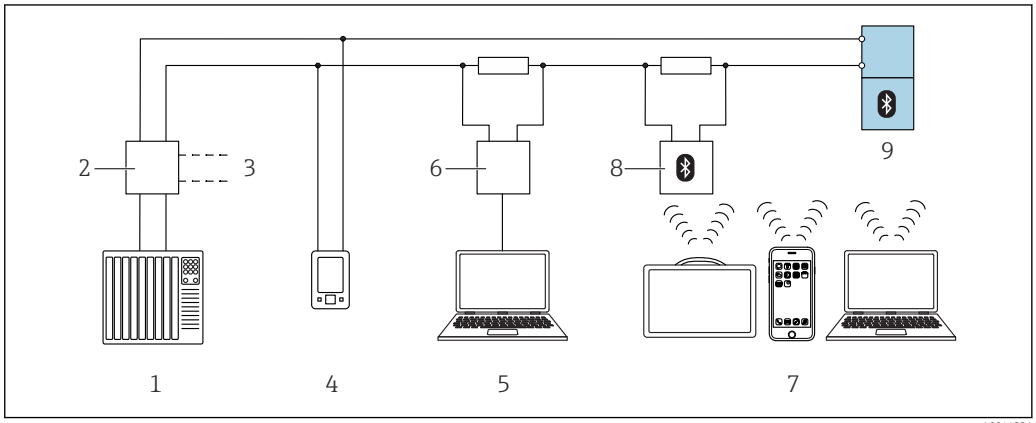

4 *Options for remote operation via HART protocol*

1 *PLC (programmable logic controller)*
2 *Transmitter power supply unit, e. g. RN42 (with communication resistor)*
3 *Connection for Commubox FXA195 and AMS Trex™ device communicator*
4 *AMS Trex™ device communicator*
5 *Computer with operating tool (e.g. DeviceCare/FieldCare , AMS Device View, SIMATIC PDM)*
6 *Commubox FXA195 (USB)*
7 *Field Xpert SMT70/SMT77, smartphone or computer with operating tool (e.g. DeviceCare/FieldCare , AMS Device View, SIMATIC PDM)*
8 *Bluetooth modem with connecting cable (e.g. VIATOR)*
9 *Transmitter*

Operation via Bluetooth® wireless technology (optional)

Prerequisite
- Device with Bluetooth order option
- Smartphone or tablet with Endress+Hauser SmartBlue app or PC with DeviceCare from version 1.07.07 or FieldXpert SMT70/SMT77

The connection has a range of up to 25 m (82 ft). The range can vary depending on environmental conditions such as attachments, walls or ceilings.

The operating keys on the display are locked as soon as the device is connected via Bluetooth.

System integration

HART version 7.6

Supported operating tools

Smartphone or tablet with Endress+Hauser SmartBlue app, DeviceCare from version 1.07.07, FieldCare, AMS and PDM

Certificates and approvals

Current certificates and approvals for the product are available at www.endress.com on the relevant product page:

1. Select the product using the filters and search field.
2. Open the product page.
3. Select **Downloads**.

Other certificates and approvals for the product are available under https://www.endress.com-> Downloads.

Hygienic design compliance

3-A and EHEDG-certified versions of the sensor are suitable for Cleaning-in-Place (CIP) and Sterilization-in-Place (SIP) without removing them from the plant. This means that the sensor does not need to be removed during cleaning. The maximum permitted pressure and temperature values for sensor and adapter must not be exceeded (see notes in this TI).

- Notes on installation and certification in accordance with 3-A and EHEDG:
  SD02503F document "Hygienic approvals"
- Information on 3-A and EHEDG-certified adapters:
  TI00426F document "Weld-in adapters, process adapters and flanges"
- ASME BPE: The measuring system meets the requirements of the ASME BPE standard (Bioprocessing Equipment)

Compliance with requirements derived from cGMP

cGMP is applicable only to wetted parts:
- The certificate is only available in English.
- Materials of construction
- ADI-free based on EMA/410/01 Rev.3 (TSE/BSE-compliant)
- Polishing and surface treatment
- Materials and compounds compliance table: USP, FDA

TSE (BSE) compliance (ADI free - Animal Derived Ingredients)

As the manufacturer, Endress+Hauser states:
- That the parts of this product in contact with the process are not made from materials derived from animals **or**
- at least comply with the requirements of guidelines outlined in EMA/410/01 rev. 3 (TSE (BSE) compliance).

ASME BPE

The measuring system meets the requirements of the ASME BPE (Bioprocessing Equipment) standard.

Order information

Detailed ordering information is available from your nearest sales organization www.addresses.endress.com or in the Product Configurator at www.endress.com:

1. Select the product using the filters and search field.
2. Open the product page.
3. Select **Configuration**.

Product Configurator - the tool for individual product configuration
- Up-to-the-minute configuration data
- Depending on the device: Direct input of measuring point-specific information such as measuring range or operating language
- Automatic verification of exclusion criteria
- Automatic creation of the order code and its breakdown in PDF or Excel output format
- Ability to order directly in the Endress+Hauser Online Shop

Identification

Measuring point (TAG)

The device can be ordered with a tag name.

Location of tag name
Select in the additional specification:
- Stainless steel wired-on tag plate
- Paper adhesive label
- Tag provided by the customer
- Nameplate
- IEC 61406 stainless steel tag
- IEC 61406 stainless steel + NFC tag
- IEC 61406 stainless steel, stainless steel tag
- IEC 61406 stainless steel + NFC, stainless steel
- IEC 61406 stainless steel tag, plate provided
- IEC 61406 stainless steel + NFC, plate provided

Definition of tag name
Specify in the additional specification:
3 lines of maximum 18 characters each
The specified tag name appears on the selected plate.

Visualization in SmartBlue app
The first 32 characters of the tag name
The tag name can always be changed specifically for the measuring point via Bluetooth.

Display on the nameplate
The first 16 characters of the tag name

Display in electronic nameplate (ENP)
The first 32 characters of the tag name

For details, see document SD03128P

Service

The following services, among others, can be selected using the Product Configurator.

- Cleaned of oil+grease (wetted)
- Set HART burst mode PV
- Set max. alarm current
- Bluetooth communication is disabled on delivery
- Customized empty/full calibration
- Product documentation on paper
  A printed (hard copy) version of test reports, declarations and inspection certificates can optionally be ordered via the **Service**, Version, **Product documentation on paper** option. The required documents can be selected under the feature **Test, certificate, declaration** and are then included with the device on delivery.

Application packages

The application package can be ordered together with the device or can be activated subsequently with an activation code. Detailed information on the relevant order code is available from the website www.endress.com or from the Endress +Hauser Sales Center.

Heartbeat Technology

Heartbeat Technology offers diagnostic functionality through continuous self-monitoring, the transmission of additional measured variables to an external Condition Monitoring system and the in situ verification of devices in the application.

Heartbeat Diagnostics

Continuous self-monitoring of the device.

Diagnostic messages output to:
- the onsite display
- an asset management system (e.g. FieldCare or DeviceCare)
- an automation system (e.g. PLC)

Heartbeat Verification

- Monitoring of the installed device without interrupting the process, including a verification report
- Clear measuring point assessment (pass/fail) with high total test coverage as part of the manufacturer's specification
- Can be used to document normative requirements
- Meets the requirements for measurement traceability in accordance with ISO 9001 (ISO 9001:2015 Section 7.1.5.2)

The verification report can be generated via Bluetooth and HART.

Heartbeat Monitoring

- Continuously provides device and/or process data for an external system. Analysis of this data provides a basis for process optimization and predictive maintenance.
- **Loop diagnostics** wizard: detection of elevated measuring circuit resistance values or declining power supply
- **Statistical Sensor Diagnostics** submenu: statistical analysis and evaluation of the pressure signal, including signal noise, to detect process anomalies
- **Process window** wizard: user-definable pressure and temperature limits to detect dynamic pressure surges or faulty trace heating systems or insulation
- **Safety mode** wizard: This wizard can be used to write-protect the device via software. The safety-relevant parameters must be confirmed in the wizard.

Detailed description

See Special Documentation for SD Heartbeat Technology.

Accessories

Device-specific accessories

M12 socket

M12 socket, straight
- Material:
  Body: PA; union nut: stainless steel; seal: EPDM
- Degree of protection (fully locked): IP69
- Order number: 71638191

M12 socket, elbowed
- Material:
  Body: PA; union nut: stainless steel; seal: EPDM
- Degree of protection (fully locked): IP69
- Order number: 71638253

Cables

Cable 4 x 0.34 mm^2 (20 AWG) with M12 socket, elbowed, screw plug, length 5 m (16 ft)
- Material: body: TPU; union nut: nickel-plated die-cast zinc; cable: PVC
- Degree of protection (fully locked): IP68/69
- Order number: 52010285
- Wire colors
  - 1 = BN = brown
  - 2 = WT = white
  - 3 = BU = blue
  - 4 = BK = black

Welding neck, process adapter and flange

For details, refer to TI00426F/00/EN "Weld-in adapters, process adapters and flanges".

Mechanical accessories

For technical data (e.g. materials, dimensions or order numbers), see the accessory document SD01553P.

DeviceCare SFE100

Configuration tool for IO-Link, HART, PROFIBUS and FOUNDATION Fieldbusfield devices
DeviceCare is available for download free of charge at www.software-products.endress.com. You need to register in the Endress+Hauser software portal to download the application.

Technical Information TI01134S

FieldCare SFE500	FDT-based plant asset management tool It can configure all intelligent field units in your system and helps you manage them. By using the status information, it is also a simple but effective way of checking their status and condition. Technical Information TI00028S
Device Viewer	All the spare parts for the device, along with the order code, are listed in the *Device Viewer* (www.endress.com/deviceviewer).
Field Xpert SMT70	Universal, high-performance tablet PC for device configuration in Ex Zone 2 and non-Ex areas For details, see "Technical Information" TI01342S
Field Xpert SMT77	Universal, high-performance tablet PC for device configuration in Ex Zone 1 areas For details, see "Technical Information" TI01418S
SmartBlue app	Mobile app for easy configuration of devices on site via Bluetooth wireless technology

Documentation

For an overview of the scope of the associated Technical Documentation, refer to the following:
- *Device Viewer* (www.endress.com/deviceviewer): Enter the serial number from the nameplate
- *Endress+Hauser Operations app*: Enter serial number from nameplate or scan matrix code on nameplate.

Standard documentation	**Document type: Operating Instructions (BA)** Installation and initial commissioning – contains all the functions in the operating menu that are needed for a routine measuring task. Functions beyond this scope are not included. **Document type: Description of Device Parameters (GP)** The document is part of the Operating Instructions and serves as a reference for parameters, providing a detailed explanation of each individual parameter of the operating menu. **Document type: Brief Operating Instructions (KA)** Quick guide to the first measured value – includes all essential information from incoming acceptance to electrical connection. **Document type: Safety Instructions, certificates** Depending on the approval, safety instructions are supplied with the device, e.g. XA. This documentation is an integral part of the Operating Instructions. Information on the Safety Instructions (XA) that are relevant for the device is provided on the nameplate.
Supplementary device-dependent documentation	Additional documents are supplied depending on the device version ordered: Always comply strictly with the instructions in the supplementary documentation. The supplementary documentation is an integral part of the device documentation.

Registered trademarks

Apple®
Apple, the Apple logo, iPhone, and iPod touch are trademarks of Apple Inc., registered in the U.S. and other countries. App Store is a service mark of Apple Inc.

Android®
Android, Google Play and the Google Play logo are trademarks of Google Inc.

Bluetooth®
The *Bluetooth®* word mark and logos are registered trademarks owned by the Bluetooth SIG, Inc. and any use of such marks by Endress+Hauser is under license. Other trademarks and trade names are those of their respective owners.

HART®
Registered trademark of the FieldComm Group, Austin, Texas USA



www.addresses.endress.com

Endress+Hauser
People for Process Automation