THE INFORMATION CONTAINED IN THIS DRAWING IS THE SOLE PROPERTY OF L-COM, INC. ANY REPRODUCTION IN PART OR WHOLE WITHOUT THE WRITTEN PERMISSION OF L-COM, INC. IS PROHIBITED.

RoHS Compliant ✔

REVISIONS			
REV	DESCRIPTION	DATE	APPROVED
A	INITIAL RELEASE	9/23/10	D.GRIFFIN
B	ECN 5210: ADDED WIRE MAP,HARDWARE NOTES & HOOD DIMS.,DETAIL VIEW	12/15/10	

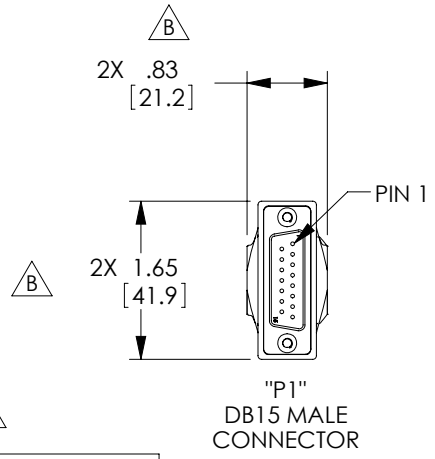

"P1"
DB15 MALE
CONNECTOR

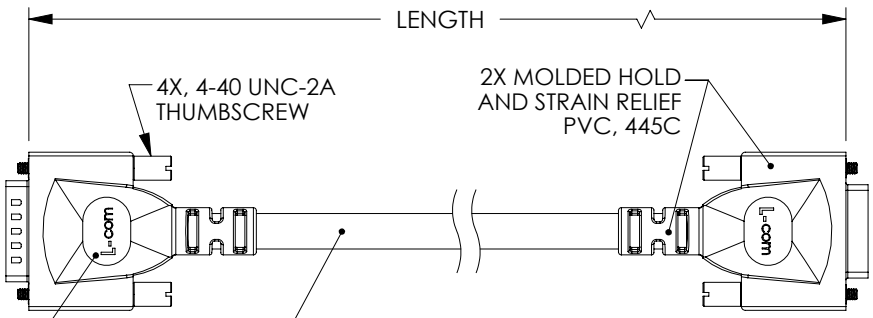

LOGO INSERT
BOTH SIDES

UL STYLE: 2464
15 COND., 20 AWG STRANDED TINNED COPPER
WITH ALUM/POLY SHIELD AND DRAIN WIRE PLUS
TINNED COPPER BRAID SHIELD.
JACKET: PVC, PANTONE 445C
JACKET MARKING: "L-COM OPTIMAL DATA TRANSFER CABLE"

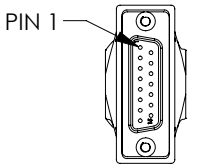

"J1"
DB15 FEMALE
CONNECTOR

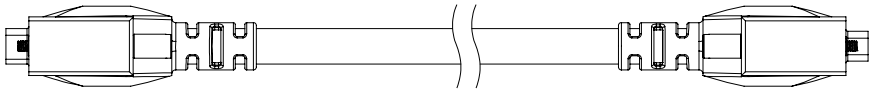

B

WIRE MAP		
"P1"	COLOR	"J1"
1	BLACK	1
2	BROWN	2
3	RED	3
4	ORANGE	4
5	YELLOW	5
6	GREEN	6
7	BLUE	7
8	PURPLE	8
9	GRAY	9
10	WHITE	10
11	PINK	11
12	LT. GREEN	12
13	BLACK/WHITE	13
14	BROWN/WHITE	14
15	RED/WHITE	15
SHELL	DRAIN	SHELL

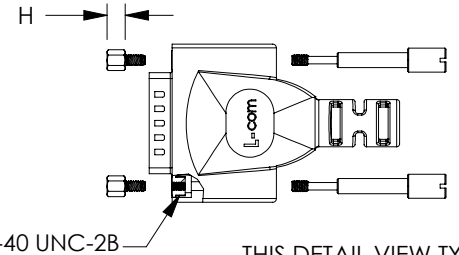

4X #4-40 UNC-2B
CAPTIVE NUT

THIS DETAIL VIEW TYPICAL
MALE/FEMALE

MODEL NUMBER	LENGTH	
	FEET	METERS
CPMS15MF-1	1.0	.30
CPMS15MF-2.5	2.5	.76
CPMS15MF-5	5.0	1.52
CPMS15MF-10	10.0	3.05
CPMS15MF-25	25.0	7.62
CPMS15MF-50	50.0	15.24

NOTES:

B
SUPPLIED WITH THUMBSCREWS IN PLACE.
NOTE: SUPPLIED WITH OPTIONAL USE HARDWARE AND INSTRUCTIONS.
CABLE INTERCONNECTION HARDWARE: (4) SCREWLOCKS, H= .191"
PANEL MOUNT HARDWARE: (4) SCREWLOCKS, H= .160"

CABLE ASSEMBLY SHALL BE TESTED FOR CONTINUITY.

CABLE ASSEMBLY SHALL BE INDIVIDUALLY PACKAGED IN ACCORDANCE WITH L-COM SPECIFICATION PS-0031.

UNLESS OTHERWISE SPECIFIED,
DIMENSIONS ARE IN INCHES [mm]
OVERALL CABLE LENGTH TOLERANCE:
≤12 [305] = +1 [25] / -0
>12 [305] ≤60 [1524] = +2 [51] / -0
>60 [1524] ≤120 [3048] = +4 [102] / -0
>120 [3048] ≤300 [7620] = +6 [152] / -0
>300 [7620] = +5% / -0%
ALL OTHER DIMENSIONAL TOLERANCES:
.X = ± .2
.XX = ± .02
.XXX = ±.005
PROJECTION

APPROVALS	DATE
DRAWN BY D.FRISIELLO	9/7/10
CHECKED BY S.SMITH	9/7/10
APPROVED BY S.SMITH	9/7/10

CONFIGURATION DETAILS OF UNDIMENSIONED FEATURES MAY VARY

COLOR VARIATIONS MAY OCCUR

L-COM Global Connectivity
45 BEECHWOOD DRIVE
NORTH ANDOVER, MA
01845

CATEGORY
DATA CABLING

PRODUCT DESCRIPTION
20 AWG D-SUB CABLE ASSEMBLY

SIZE	FSCM NO.	DWG. NO.	REV.
A	43321	CPMS15MF	B

SCALE: NONE | CAD FILE: CPMS15MF.SLDDRW | SHEET 1 OF 1