Mini installation beacon / LED Beacon 816

LED Perm. Beacon EM 24VDC MC



Part No.: 816.780.55

MECHANICAL DATA	
Height	97 mm
Diameter	75 mm
Materials	PC
Dome colour	Clear
Protection category	IP65
Connection	M12 plug 4-pole
Tension relief	Present (conforms to VDE)
Type of fixing	Built-in mounting
Working temperature minimum	-20°C
Working temperature maximum	+50°C
Weight with packaging	132 g
Product weight	110 g

ELECTRICAL DATA	
Operating voltage	24V
Operating voltage type	DC
Operating voltage tolerance	+/- 10%
Rated operational voltage	24 VDC
Rated operational current	120 mA
Rated inrush current	500 mA
Protection class	Protection class 2
Pollution degree	3 In the connection area: 2

OPTICAL DATA	
Light source	LED
Light colour	MC 7 colours
Optical signal image	Permanent
Service life optical	50,000 h maximum

APPROVAL DATA	
Conforms with CE	Yes
WEEE	Yes
Conforms with ATEX-directive	No
Conforms with CCC	No
Conforms with UL	cULus
UL Type Rating	Type 12
Conforms with FCC	No
Conforms with IC	No

! For additional installation and mounting information, refer to the appropriate user guide at www.werma.com. This printed copy is for information only and is subject to alteration.

Mini installation beacon / LED Beacon 816

LED Perm. Beacon EM 24VDC MC

EAC certificate available	Yes
Conforms with UKCA (Importer)	Yes (WERMA (UK) Ltd.)
Conforms with AS-I	No
ICAO Certification	No
Conforms with DNV	No
Conforms with RoHS CN	No
Conforms with VdS	No

DRAWING

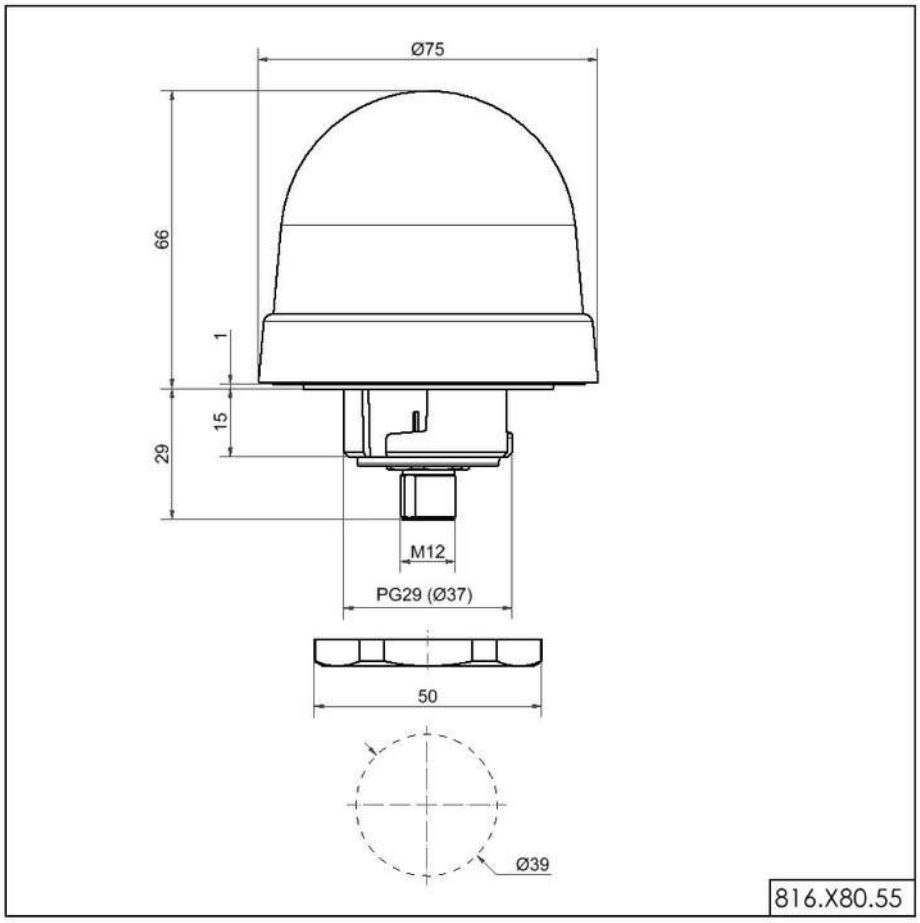

! For additional installation and mounting information, refer to the appropriate user guide at www.werma.com. This printed copy is for information only and is subject to alteration.