CATALOG

Switch-disconnectors

High performance, compact solution

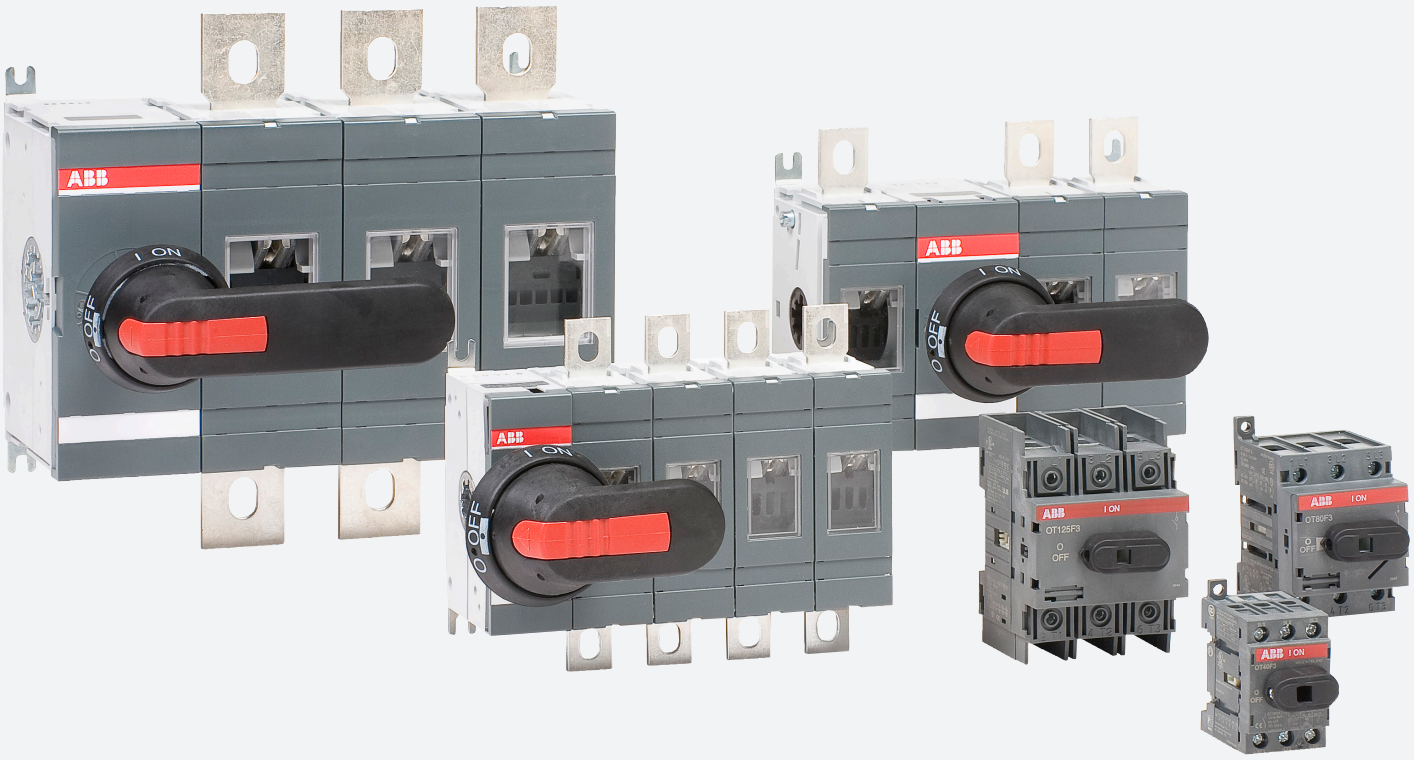

- **Reliable in extreme conditions**
- **Space saving**
- **Safety and protection**

Table of contents

01. Introduction to manual switch-disconnectors OT160...4000 4

02. Manual switch-disconnectors OT16...160 6

03. Manual switch-disconnectors OT160...4000 58

04. Motorized switch-disconnectors 152

Switch-disconnectors 16 to 4000 Amperes

ABB offers switch-disconnectors suitable for diverse applications such as machinery, power distribution, switchboards, motor control centers or photovoltaic installations. These devices are globally available and always supported by our skilled and dedicated worldwide service network. ABB also offers a complete range of enclosed switch-disconnectors in various enclosure materials.



Reliable in extreme conditions

ABB switch-disconnectors are designed, built and tested for the best possible performance. They are designed to be virtually maintenance-free across their entire extended lifespan and offer reliable performance in any and all possible circumstances. Durability has been ensured by testing switches against the IEC609473, UL508, UL98 and CSA standards.

Space saving

All our switches have been designed for easy and cost-efficient installation, maintenance and use. Their modular design and smaller dimensions enable installation into even the smallest enclosures saving precious space and significantly reducing material, handling and installation costs. The simple design also makes use easy, even without previous experience or training.

Safety and protection

ABB switch-disconnectors come equipped with a comprehensive range of inbuilt safety features. All motorized switches can also be operated manually in emergency situations, but can also be padlocked when the handle is removed to prevent unwanted manual or remote operations or enable safe maintenance work.

ABB switch-disconnectors are suited for a wide variety of demanding applications.

Whether it is for demanding motor load disconnecting or simple isolation applications, we offer a market-leading product portfolio of switch-disconnectors ranging from 16 to 4000 Amperes.

Thanks to their modular structure, our switches can serve both manual and motorized applications. These devices also help create purpose-built solutions from directly busbar mountable wide phase models to floor mounted earthing switches. All this with the highest level of performance and reliability.

Typical switch-disconnector applications:



Switching of mixed loads for basically any application:

- Control panels
- Low-voltage switchgears
- Low-voltage substations



Motor disconnecting in various applications:

- Machine builders
- Motor control centers
- HVAC, pumps and conveyors



Heavy industries:

- Pulp & Paper
- Food & Beverage
- Refining & petrochemicals



Power generation and renewables:

- Wind turbines
- Solar plants
- Generating sets
- Power plants



Manual switch-disconnectors OT16...160
Compact and reliable performance

Manual switch-disconnectors

Product overview	8
Product range	9
Type designation key for the types OT16…160	10

Technical data

Manual switch-disconnectors OT160, IEC and OT100...125, UL	11

Ordering information

Manual switch-disconnectors OT16...160	16
Manual switch-disconnectors OT16...160, IEC	18
Manual switch-disconnectors OT16...160, UL	20
Accessory guide for OT160G	22
Manual switch-disconnectors OT16...160, IEC/UL	23

Dimensional drawings

Manual switch-disconnectors OT16...160	24

Ordering information for accessories

Handle accessories	34
Handles	35
Legend plates	40
Legend plates and labelling accessories	41
Shafts	42
Shaft accessories	43
Auxiliary contacts	44
Fourth poles	47
Neutral and earth terminals	48
Terminal shrouds	49
Terminal clamps	50
Conversion kits	51
Conversion kit accessories	55
Locking accessories	56

Manual switch-disconnectors OT16...160
Compact and reliable performance

Manual switch-disconnectors by ABB are suitable for a wide range of demanding applications ranging from machinery to entire photovoltaic installations. They have been designed to be compact and reliable, offering high performance in even the most demanding environments.







Easy to install
ABB switch-disconnectors are designed, built and tested for the best possible performance. They are designed to be virtually maintenance-free across their entire extended lifespan and offer reliable performance in any and all possible circumstances. Durability has been ensured by testing switches against the IEC60947-3, UL508, UL98 and CSA standards.

Optimized logistics
All our switches have been designed for easy and cost-efficient installation, maintenance and use. Their modular design and smaller dimensions enable installation into even the smallest enclosures saving precious space and significantly reducing material, handling and installation costs. The simple design also makes use easy, even without previous experience or training.

Safety and protection
ABB switch-disconnectors come equipped with a comprehensive range of inbuilt safety features. All motorized switches can also be operated manually in emergency situations, but can also be padlocked when the handle is removed to prevent unwanted manual or remote operations or enable safe maintenance work.

Manual switch-disconnectors OT16...160

Product range





Manual operation				
IEC	OT16F	OT63F	OT100F
	OT25F	OT80F	OT125F
	OT40F		
UL 508 file # E63822	OT16F	OT63F	
	OT25F	OT80F	
	OT40F		
UL 98 file # E101914			OT30F
			OT60F
			OT100F

Switch size		16	25	40	63	80	30	60	100	125
IEC	**I_{th}**	25 A	32 A	40 A	63 A	80 A	40 A	63 A	115 A	125 A
	I_e / AC22A, 400...415 V	16 A	25 A	40 A	63 A	80 A	40 A	63 A	100 A	125 A
	I_e / AC23A, 400...415 V	16 A	20 A	23 A	63 A	75 A	40 A	63 A	80 A	90 A
UL	**Ampere rating, 600 V**	20 A	30 A	40 A	60 A	80 A	30 A	60 A	100 A	



Manual operation		
IEC	OT160G	
UL 98 file # E101914	OT160G	

Switch size		100	125	160
IEC	**I_{th}**			160 A
	I_e /AC22A, 400...690 V			160 A
	I_e /AC23A, 400...690 V			160 A
UL	**Ampere rating, 600 V**	100 A	125 A	

The selection of accessories for manual switch-disconnectors OT16...160 include:

- Handles
- Legend plates
- Labelling accessories
- Shafts
- Auxiliary contacts
- Fourth poles
- N & PE terminals
- Terminal shrouds
- Terminal clamps
- Conversion kits
- Locking accessories

Please note that listed accessories are not automatically included in your order.
Ordering information for accessories from page 38-41, 44, 46-48, 51-56 and 59-60.

Manual switch-disconnectors OT16...160

Type designation key

Understanding the type code keys below will help you quickly identify the correct product for your needs

ABB Brand
ABB switch-disconnector brand

Switch size
The second letter in the code indicates the ampere rating [A] of the product: 16...160 A

OT 16 F 4 N2

Included accessories	
N2	Fourth pole, simultaneous function with the main contacts
–	No accessories included
P	Pistol handle + shaft
K	Direct mount handle (for base mounting versions only)

Operation/Mounting/Certification	
F	Base and DIN-rail mounting, front operated
FT	Door mounting, front operated
G	Base and DIN-rail mounting, front and side operated
GT	Door mounting, front and side operated
FL	Base and DIN-rail mounting, extended terminals on both sides of the switch, front operated
FLA	Base and DIN-rail mounting, extended terminals on top side only, front operated
FLB	Base and DIN-rail mounting, extended terminals on bottom side only, front operated
M ML	Installation switches for 45 mm standard opening, base and DIN -rail mounting, front operated

Number of poles and placing of the operating mechanism	
3	3 poles
4	4 poles
6	6 poles
8	8 poles
03	3 poles, operating mechanism at the left end of the switch
04	4 poles, operating mechanism at the left end of the switch
30	3 poles, operating mechanism at the right end of the switch
40	4 poles, operating mechanism at the right end of the switch

Pole configuration table, OT160G

Front operated
Configuration 03, 04:

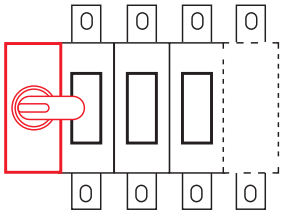

Side operated
Configuration 30, 40 or 03, 04:

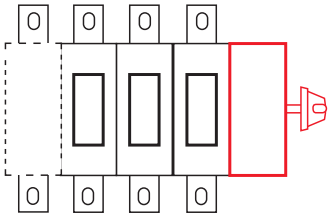

Manual switch-disconnectors OT16...125, IEC

Technical data

Technical data according to IEC 60947-3

Switch type			OT16F	OT25F	OT40F	OT63F	OT80F	OT100F	OT125F
Rated insulation voltage and rated operational voltage AC20/DC20	Pollution degree 3		750 V	750 V	750 V	750 V	750 V	750 V	750 V
Dielectric strength		50 Hz 1 min.	6 kV	6 kV	6 kV	6 kV	6 kV	6 kV	6 kV
Rated impulse withstand voltage			8 kV	8 kV	8 kV	8 kV	8 kV	8 kV	8 kV
Rated thermal current and rated operational current AC20/DC20	Ambient 40 °C [2]	In open air	25 A	32 A	40 A	63 A	80 A	115 A	125 A
	Ambient 40 °C [2]	In enclosure	25 A	32 A	40 A	63 A	80 A	115 A	125 A
	Ambient 60 °C	In enclosure	20 A	25 A	32 A	50 A	63 A	80 A	100 A
...with minimum conductor cross section		Cu	4 mm²	6 mm²	10 mm²	16 mm²	25 mm²	35 mm²	50 mm²
Rated operational current, AC-21A		up to 415 V	16 A	25 A	40 A	63 A	80 A	100 A	125 A
		440...690 V	16 A	25 A	40 A	63 A	80 A	100 A	125 A
Rated operational current, AC-22A		up to 415 V	16 A	25 A	40 A	63 A	80 A	100 A	125 A
		440...690 V	16 A	25 A	40 A	63 A	80 A	100 A	125 A
Rated operational current, AC-23A		up to 415 V	16 A	20 A	23 A	63 A	75 A	80 A	90 A
		440 V	16 A	20 A	23 A	63 A	65 A	65 A	78 A
		500 V	16 A	20 A	23 A	45 A	58 A	60 A	70 A
		690 V	10 A	11 A	12 A	20 A	20 A	40 A	50 A
Rated operational current / poles in series, DC-21A		24...48 V [1]	16 A/1	25 A/1	32 A/1	63 A/1	80 A/1	100 A/1	125 A/1
		110 V	16 A/2	25 A/2	32 A/2	63 A/2	80 A/2	100 A/2	125 A/2
		220 V	16 A/3	25 A/3	32 A/3	63 A/4	80 A/4	100 A/4	125 A/4
		440 V	16 A/4	16 A/4	16 A/4	16 A/4	16 A/4	–	–
		500 V	16 A/4	16 A/4	16 A/4	16 A/4	16 A/4	–	–
		750 V	16 A/8	25 A/8	32 A/8	–	–	–	–
Rated operational current / poles in series, DC-22A		24...48 V [1]	16 A/1	25 A/1	32 A/1	63 A/1	80 A/1	100 A/1	125 A/1
		110 V	16 A/2	25 A/2	32 A/2	63 A/2	80 A/2	100 A/2	125 A/2
		220 V	16 A/3	25 A/3	32 A/4	45 A/4	45 A/4	63 A/4	80 A/4
		440 V	10 A/4	10 A/4	10 A/4	10 A/4	10 A/4	–	–
		750 V	16 A/8	25 A/8	25 A/8	–	–	–	–
Rated operational current / poles in series, DC-23A		24...48 V [1]	16 A/1	25 A/1	32 A/1	63 A/1	80 A/1	100 A/1	125 A/1
		110 V	16 A/2	25 A/2	32 A/2	63 A/2	80 A/2	100 A/2	125 A/2
		220 V	16 A/4	25 A/4	32 A/4	45 A/4	45 A/4	63 A/4	63 A/4
		440 V	10 A/4	10 A/4	10 A/4	10 A/4	10 A/4	–	–
		750 V	16 A/8	16 A/8	16 A/8	–	–	–	–
Rated operational power, AC-23A (These values are given for guidance and may vary acc. to the motor manufacturer)		220...240 V	3 kW	4 kW	5.5 kW	11 kW	22 kW	22 kW	22 kW
		400...415 V	7.5 kW	9 kW	11 kW	22 kW	37 kW	37 kW	45 kW
		440...500 V	7.5 kW	9 kW	11 kW	22 kW	37 kW	37 kW	45 kW
		690 V	7.5 kW	9 kW	11 kW	15 kW	18.5 kW	37 kW	45 kW
Rated breaking capacity, AC-23A		up to 415 V	128 A	160 A	184 A	360 A	640 A	640 A	720 A
		440 V	128 A	160 A	184 A	360 A	448 A	520 A	624 A
		500 V	128 A	160 A	184 A	360 A	464 A	480 A	560 A
		690 V	80 A	88 A	96 A	160 A	160 A	320 A	400 A
Rated breaking capacity/ poles in series, DC-23A		24...48 V	64 A/1	100 A/1	128 A/1	180 A/1	252 A/1	400 A/1	500 A/1
		110 V	64 A/2	100 A/2	128 A/2	180 A/2	252 A/2	400 A/2	500 A/2
		220 V	64 A/3	100 A/4	128 A/4	180 A/4	180 A/4	252 A/4	252 A/4
		440 V	40 A/4	40 A/4	40 A/4	40 A/4	40 A/4	–	–
		750 V	64 A/8	64 A/8	64 A/8	–	–	–	–
Rated conditional short-circuit current I_q (r.m.s.) and corresponding max. Allowed cut-off current $\hat{I}_c$ of fuse. The cut-off current $\hat{I}_c$ referes to values listed by fuse manufacturers (single phase test acc. To IEC60269)	I_q 50kA, ≤415V	$\hat{I}_c$	6.5 kA	6.5 kA	6.5 kA	13 kA	13 kA	16.5 kA	16.5 kA
	Max. OFA_fuse size	gG/aM	40 A/32 A	40 A/32 A	40 A/32 A	100 A/80 A	100 A/80 A	125 A/125 A	125 A/125 A
	I_q 100kA, 500V	$\hat{I}_c$	–	–	–	17 kA	17 kA	–	–
	Max. OFA_fuse size	gG/aM	–	–	–	100 A/80 A	100 A/80 A	–	–
	I_q 10kA, 690V	$\hat{I}_c$	–	–	–	–	–	8.2 kA	8.2 kA
	Max. OFA_fuse size	gG/aM	–	–	–	–	–	125 A/100 A	125 A/100 A
	I_q 50kA, 690V	$\hat{I}_c$	4 kA	4 kA	4 kA	11 kA	11 kA	10 kA	10 kA
	Max. OFA_fuse size	gG/aM	25 A/16 A	25 A/16 A	25 A/16 A	80 A/63 A	80 A/63 A	63 A/63 A	63 A/63 A
Rated short-time withstand current	r.m.s. -value I_{cw}	690 V, 1 s	0.5 kA	0.5 kA	0.5 kA	1.5 kA	1.5 kA	2.5 kA	2.5 kA
Rated short circuit making capacity	Peak value I_{cm}	690 V/500 V	0.71 kA	0.71 kA	0.71 kA	2.1 kA	2.1 kA	3.6 kA	3.6 kA
Rated capacitor power (the capacitor ratings are limited by the fuse link.)		400...415 V	6.5 kVAr	10 kVAr	15 kVAr	25 kVAr	30 kVAr	40 kVAr	50 kVAr
Power loss/pole	At rated operational current		0.3 W	0.6 W	1.6 W	2.8 W	4.5 W	4.0 W	6.3 W
Mechanical endurance	Divide by two for operation cycles		20 000 Oper.	20 000 Oper.	20 000 Oper.	20 000 Oper.	20 000 Oper.	20 000 Oper.	20 000 Oper.
Weight without accessories	3-pole		0.11 kg	0.11 kg	0.11 kg	0.27 kg	0.27 kg	0.36 kg	0.36 kg
	4-pole		0.15 kg	0.15 kg	0.15 kg	0.35 kg	0.35 kg	0.50 kg	0.50 kg
Cable size	Cu-wire size suitable for terminal clamps		0.75...10 mm²	0.75...10 mm²	0.75...10 mm²	1.5...35 mm²	1.5...35 mm²	10...70 mm²	10...70 mm²
			18-8 AWG	18-8 AWG	18-8 AWG	14-4 AWG	14-4 AWG	8-00 AWG	8-00 AWG
Terminal tightening torque	Counter torque required		0.8 Nm	0.8 Nm	0.8 Nm	2 Nm	2 Nm	6 Nm	6 Nm
Operating torque	3-pole switch-disconnector		1 Nm	1 Nm	1 Nm	1.2 Nm	1.2 Nm	2 Nm	2 Nm

[1] Below 48 V, two poles in parallel up to OT80 are recommended particularly in polluted atmosphere.
[2] Acc. to IEC 60947-1, § 6.1.1.

Manual switch-disconnectors OT16...100, UL

Technical data for non fusible disconnect switches

Technical data according to UL/CSA, AC ratings

Switch type			OT16F	OT25F	OT40F	OT63F	OT80F	OT30F	OT60F	OT100F
		Approval	cULus Listed	cULus Listed	cULus Listed	cULus Listed	cULus Listed	cULus Listed	cULus Listed	cULus Listed
			E63822	E63822	E63822	E63822	E63822	E101914	E101914	E101914
		Compliance	UL508	UL508	UL508	UL508	UL508	UL98	UL98	UL98
			CSA C22.2 No.14	CSA C22.2 No.14	CSA C22.2 No.14	CSA C22.2 No.14	CSA C22.2 No.14	CSA C22.2 No.4	CSA C22.2 No.4	CSA C22.2 No.4
General purpose amp rating	pf= 0.7...0.8	-40° to 40 °C	20 A	30 A	40 A	60 A	80 A	30 A	60 A	100 A
Max. operating voltage			600 V	600 V	600 V	600 V	600 V	600 V	600 V	600 V
Max. horsepower rating / motor FLA current	pf= 0.4...0.5	240 V	5 HP/15.2 A	7.5 HP/22.0 A	10 HP/28.0 A	15 HP/42.0 A	20 HP/54.0 A	10 HP/28.0 A	20 HP/54.0 A	30 HP/80.0 A
	Three phase	480 V	10 HP/14.0 A	15 HP/21.0 A	20 HP/27.0 A	30 HP/40.0 A	40 HP/52.0 A	20 HP/27.0 A	40 HP/52.0 A	50 HP/65.0 A
		600 V	10 HP/11.0 A	20 HP/22.0 A	25 HP/27.0 A	30 HP/32.0 A	40 HP/41.0 A	30 HP/32.0 A	40 HP/41.0 A	50 HP/52.0 A
	Single phase	120 V	1 HP/16.0 A	1.5 HP/20.0 A	2 HP/24.0 A	2 HP/24.0 A	2 HP/24.0 A	2 HP/24.0 A	3 HP/34.0 A	5 HP/56.0 A
		240 V	2 HP/12.0 A	3 HP/17.0 A	5 HP/28.0 A	7.5 HP/40.0 A	10 HP/50.0 A	5 HP/28.0 A	7.5 HP/40.0 A	15 HP/68.0 A
		480 V	5 HP/14.0 A	7.5 HP/21.0 A	10 HP/26.0 A	15 HP/34.0 A	20 HP/44.0 A	–	–	25 HP/55.0 A
		600 V	7.5 HP/16.0 A	10 HP/20.0 A	15 HP/27.0 A	15 HP/27.0 A	20 HP/38.5 A	–	–	20 HP/35.0 A
Short circuit rating with fuse	Maximum fuse size		30 A 60 A	30 A 60 A	30 A 60 A	100 A 150 A	100 A 150 A	60 A	60 A	150 A 100 A
	Fuse type	J	10 kA 10 kA	10 kA 10 kA	10 kA 10 kA	100 kA –	100 kA –	200 kA	200 kA	50 kA 200 kA
	Fuse type	T	10 kA 10 kA	10 kA 10 kA	10 kA 10 kA	100 kA –	100 kA –	200 kA	200 kA	50 kA 200 kA
	Fuse type	RK1	10 kA –	10 kA –	10 kA –	– –	–	–	–	– –
	Fuse type	RK5*	5 kA 5 kA	5 kA 5 kA	5 kA 5 kA	10 kA 5 kA	10 kA 5 kA	–	–	– –
	Fuse type	L	– –	– –	– –	– –	– –	–	–	– –
	Fuse type	H	– –	– –	– –	– 5 kA	– 5 kA	–	–	– –

Endurances

Min. electrical endurance, pf. 0.75...0.8			6 000 Oper.	6 000 Oper.	6 000 Oper.	6 000 Oper.	6 000 Oper.	6 000 Oper.	6 000 Oper.	6 000 Oper.
Mechanical endurance			20 000 Oper.	20 000 Oper.	20 000 Oper.	20 000 Oper.	20 000 Oper.	20 000 Oper.	20 000 Oper.	20 000 Oper.
Terminal lugs			integrated	integrated	integrated	integrated	integrated	integrated	integrated	integrated
Copper wire range		60-75 °C	18-8 AWG	18-8 AWG	18-8 AWG	14-4 AWG	14-4 AWG	14-4 AWG	14-4 AWG	8-1/0 AWG
Torque		Wire tightening	0.8 Nm/7 lb.in	0.8 Nm/7 lb.in	0.8 Nm/7 lb.in	2 Nm/18 lb.in	2 Nm/18 lb.in	6.2 Nm/55 lb.in	6.2 Nm/55 lb.in	6.2 Nm/55 lb.in

* Fuse size 70 A for RK5.

Manual switch-disconnectors OT16...100, UL

Technical data for non fusible disconnect switches

Technical data according to IEC 60947-3

Switch type			OT16F	OT25F	OT40F	OT63F	OT80F	OT30F	OT60F	OT100F
Rated insulation voltage and rated operational voltage AC20/DC20	Pollution degree 3		750 V	750 V	750 V	750 V	750 V	750 V	750 V	750 V
Dielectric strength		50 Hz 1 min.	6 kV	6 kV	6 kV	6 kV	6 kV	6 kV	6 kV	6 kV
Rated impulse withstand voltage			8 kV	8 kV	8 kV	8 kV	8 kV	8 kV	8 kV	8 kV
Rated operational current, AC-22A		up to 415 V	16 A	25 A	40 A	63 A	80 A	40 A	63 A	100 A
		440...500 V	16 A	25 A	40 A	63 A	80 A	40 A	63 A	100 A
		690 V	16 A	25 A	40 A	63 A	80 A	40 A	63 A	100 A
Rated operational current, AC-23A		up to 415 V	16 A	20 A	23 A	63 A	75 A	40 A	63 A	80 A
		440 V	16 A	20 A	23 A	63 A	65 A	40 A	63 A	65 A
		500 V	16 A	20 A	23 A	45 A	58 A	40 A	63 A	60 A
		690 V	10 A	11 A	12 A	20 A	20 A	40 A	40 A	40 A
Rated conditional short-circuit current I_q (r.m.s.) and corresponding max. Allowed cut-off current $\hat{I}_c$ of fuse. The cut-off current $\hat{I}_c$ referes to values listed by fuse manufacturers (single phase test acc. To IEC60269)	I_q 50kA, 415V Max. OFA_ fuse size	$\hat{I}_c$	6.5 kA	6.5 kA	6.5 kA	13 kA	13 kA	16.5 kA	16.5 kA	16.5 kA
		gG/aM	40 A/32 A	40 A/3 2A	40 A/32 A	100 A/80 A	100 A/80 A	125 A/125 A	125 A/125 A	125 A/125 A
	I_q 10kA, 690V Max. OFA_ fuse size	$\hat{I}_c$	–	–	–	–	–	8.2 kA	8.2 kA	8.2 kA
		gG/aM	–	–	–	–	–	125 A/100 A	125 A/100 A	125 A/100 A
	I_q 50kA, 690V Max. OFA_ fuse size	$\hat{I}_c$	4 kA	4 kA	4 kA	11 kA	11 kA	10 kA	10 kA	10 kA
		gG/aM	25 A/16 A	25 A/16 A	25 A/16 A	80 A/63 A	80 A/63 A	63 A/63 A	63 A/63 A	63 A/63 A
Rated short-time withstand current	r.m.s. -value I_{cw}	690 V, 1 s	0.5 kA	0.5 kA	0.5 kA	1.5 kA	1.5 kA	2.5 kA	2.5 kA	2.5 kA
Rated short circuit making capacity	Peak value I_{cm}	690 V/500 V	0.71 kA	0.71 kA	0.71 kA	2.1 kA	2.1 kA	3.6 kA	3.6 kA	3.6 kA
Power loss / pole		At rated operational current	0.3 W	0.6 W	1.6 W	2.8 W	4.5 W	0.7 W	1.6 W	4.0 W
Mechanical endurance		Divide by two for operation cycles	20 000 Oper.	20 000 Oper.	20 000 Oper.	20 000 Oper.	20 000 Oper.	20 000 Oper.	20 000 Oper.	20 000 Oper.
Weight without accessories		3-pole	0.11 kg	0.11 kg	0.11 kg	0.27 kg	0.27 kg	0.36 kg	0.36 kg	0.36 kg
		4-pole	0.15 kg	0.15 kg	0.15 kg	0.35 kg	0.35 kg	0.50 kg	0.50 kg	0.50 kg

Manual switch-disconnectors OT160G_, IEC and UL

Technical data for non fusible disconnect switches

Technical data according to IEC 60947

Rated insulation voltage		Pollution degree 3		1 000 V
Dielectric strength		50 Hz 1 min.		10 kV
Rated impulse withstand voltage				12 kV
Rated thermal current in ambient 35 °C		In open air		160 A
and temporarily 40 °C		In enclosure		160 A
...with minimum cable or bar cross section		Cu		70 mm²
Rated operational voltage AC-20 and DC-20				1 000 V
Rated operational current, AC-21A, AC-22A, AC-23A		up to 415 V		160 A
		500 V		160 A
		690 V		160 A
Rated operational current / poles in series for		Up to 220 V		160 A/2
DC-21A, DC-22A, DC23A		440 V		125 A/3
		680 V		125 A/4
Rated operational power, AC-23	The kW-ratings are accurate	230 V		45 kW
	for three-phase 1500 R.P.M.	400 V		75 kW
	standard asynchronous motors.	415 V		75 kW
		500 V		90 kW
		690 V		132 kW
Rated breaking capacity in category AC-23		up to 500 V		1 280
		690 V		1 280
Rated conditional short-circuit current I_q (r.m.s.) and	I_q 100kA, 500V	$\hat{I}_c$		30 kA
corresponding max. Allowed cut-off current $\hat{I}_c$ of fuse. The	Max. OFA_fuse size	gG/aM		200 A/200 A
cut-off current $\hat{I}_c$ referes to values listed by fuse	I_q 100kA, 690V	$\hat{I}_c$		24 kA
manufacturers (single phase test acc. To IEC60269)	Max. fuse size	gG/aM		-/200A
Rated short-time withstand current	R.M.S.-value I_{cw}	690 V	0.25 s	7 kA
		690 V	1 s	4 kA
Rated short-circuit making capacity	Peak value I_{cm}	690 V		12 kA
Rated capacitor power	Capacitor ratings	415 V		65 kVAr
when no initial charge on the capacitor	limited by fuse links			
Power loss / pole	With rated current			6.5 W
Mechanical endurance	Divide by two for operation cycles			20 000 Oper.
Weight without accessories	3-pole switch			1.1 kg/0.5 lb
	4-pole switch			1.3 kg/0.6 lb
Standard shaft and mounting depth	Square dimension x length of shaft			6X210 mm
	Corresponding mounting depth			230-248 mm/9.2-9.9 in
Standard handle				OHB65J6 Type
Cu-wire size suitable for terminal	60-75 °C			10-70 mm²/ 8-1/0 AWG
Terminal tightening torque				6 Nm/53 lb·in
Operating torque	Typical for 3 and 4-pole switches			4 Nm/35.3 lb·in

Technical data according to UL98, CSA C22.2 No.4

			$_{c}UL_{us}$ Listed	UL Recognized
General purpose amp rating	pf=0.7...0.8	-40° to 40 °C	100 A	125 A
max. operating voltage			600 V	600 V
Max. horsepower rating/motor FLA current	pf=0.4...0.5	240 V AC	40 HP/104 A	40 HP/104 A
	Three phase	480 V AC	75 HP/96 A	75 HP/96 A
		600 V AC	100 HP/99 A	100 HP/99 A
	Single phase	240 V AC	20 HP/88 A	20 HP/88 A
		480 V AC	30 HP/66 A	30 HP/66 A
		250 Vdc	20 HP/60 A	20 HP/60 A
Fuse size/short circuit rating	Fuse type	J	150 A/100 kA	150 A/100 kA
		T	150 A/100 kA	150 A/100 kA
		RK5	60 A/100 kA	60 A/100 kA
Endurances				
Min. electrical endurance, pf. 0.75 - 0.8			6 000 Oper. cycles	6 000 Oper. cycles
Mechanical endurance			20 000 Operations	20 000 Operations
Terminal lug kits			integrated	integrated
Wire range	Use copper conductors only	60-75 °C	8-1/0 AWG	8-1/0 AWG
Torque		Wire tightening	53 lb.in	53 lb.in
Weight without accessories	3-pole switch		0.5 lb	0.5 lb
	4-pole switch		0.6 lb	0.6 lb
Minimum enclosure dimensions	Height x width x depth		400 x 600 x 230 mm	–
			15.75 x 23.62 x 9.06 in	–



Manual switch-disconnectors OT16...160

Ordering information

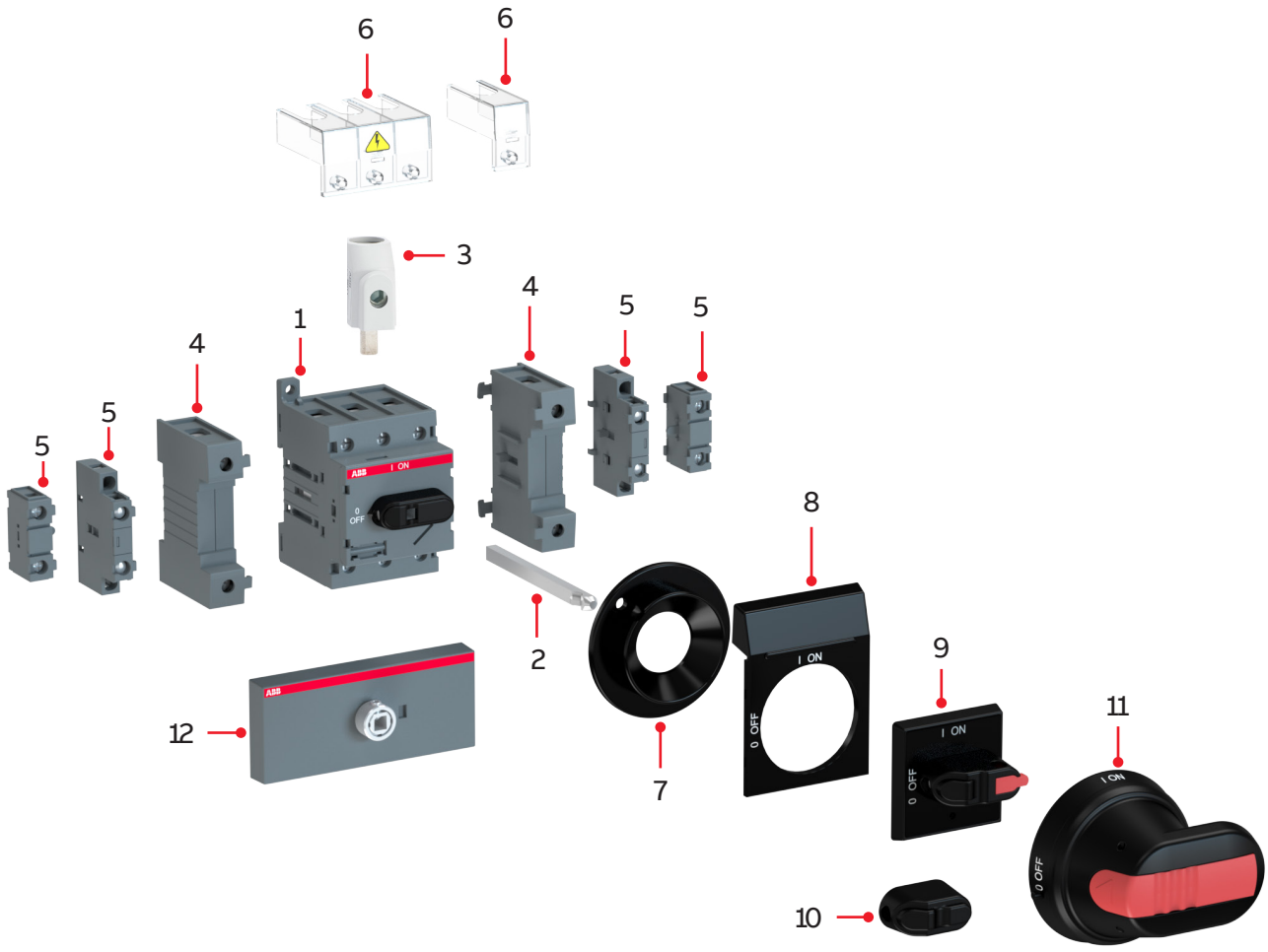

Accessory guide for OT16F...125F (base and DIN-rail mounted switch-disconnectors)

1. Switch-disconnector
2. Extended shaft
3. Terminal clamp
4. Fourth pole, N- and PE-terminals
5. Auxiliary contact
6. Terminal shroud
7. Shaft alignment ring
8. Legend plate
9. Selector handle
10. Handle knob
11. Pistol handle
12. Conversion kit
13. Labelling accessories

Please note that listed accessories are not automatically included in your order.

Manual switch-disconnectors OT16...160

Ordering information

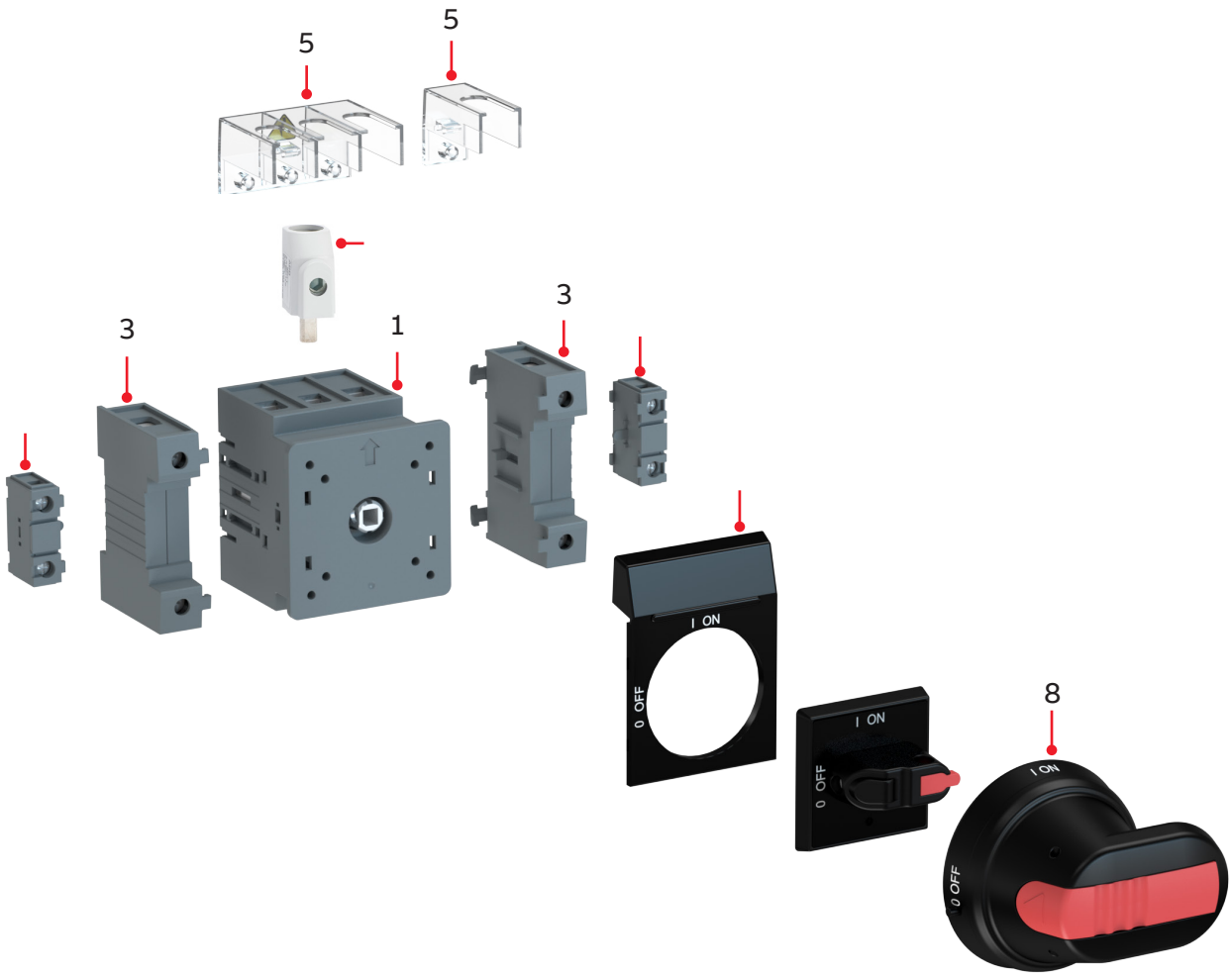

Accessory guide for OT16F...125F (door mounted switch-disconnectors)

1. Switch-disconnector
2. Terminal clamp
3. Fourth pole, N- and PE-terminals
4. Auxiliary contact
5. Terminal shroud
6. Legend plate
7. Selector handle
8. Pistol handle

Please note that listed accessories are not automatically included in your order.

Manual switch-disconnectors OT16...160, IEC

Ordering information



OT16...40F3



OT63...80F3



OT100...125F3



OT125FLB3

Front operated switch-disconnectors, base and DIN-rail mounting, IEC

Including protected terminal clamps IP20, except OT125FL_ types.
Handle and shaft are not included.

Number of poles	Open air thermal current I_{th} A	Copper cable cross section mm²	Rated operat. currents AC22A/AC23A 400...415 V A/A	Type	Order code	Weight/ unit kg
3	25	0.75...10	16/16	OT16F3	1SCA104811R1001	0.11
4	25	0.75...10	16/16	OT16F4N2	1SCA104829R1001	0.14
3	32	0.75...10	25/20	OT25F3	1SCA104857R1001	0.11
4	32	0.75...10	25/20	OT25F4N2	1SCA104886R1001	0.14
3	40	0.75...10	40/23	OT40F3	1SCA104902R1001	0.11
4	40	0.75...10	40/23	OT40F4N2	1SCA104932R1001	0.14
3	63	1.5...35	63/63	OT63F3	1SCA105332R1001	0.27
4	63	1.5...35	63/63	OT63F4N2	1SCA105365R1001	0.30
3	80	1.5...35	80/75	OT80F3	1SCA105798R1001	0.27
4	80	1.5...35	80/75	OT80F4N2	1SCA105413R1001	0.30
3	115	10...70	100/80	OT100F3	1SCA105004R1001	0.36
4	115	10...70	100/80	OT100F4N2	1SCA105018R1001	0.50
3	125	10...70	125/90	OT125F3	1SCA105033R1001	0.36
4	125	10...70	125/90	OT125F4N2	1SCA105051R1001	0.50
3	125		125/90	OT125FL3 [1]	1SCA112372R1001	0.43
3	125		125/90	OT125FLA3 [2]	1SCA114832R1001	0.43
3	125		125/90	OT125FLB3 [3]	1SCA114833R1001	0.43

[1] Extended terminals on both sides of the switch
[2] Extended terminals on top side only
[3] Extended terminals on bottom side only



OT40M3



OT63ML4



OT125M4

Front operated switch-disconnectors, installation switch, base and DIN-rail mounting, IEC

Including a black knob handle and protected terminal clamps IP20. For standard 45 mm opening. OT16…125M: padlockable in OFF-position with one padlock (bail dia 5 mm).
For switches OT16M...40M, 45 mm adapter handles are available.

Number of poles / modules	Open air thermal current I_{th} A	Copper cable cross section mm²	Rated operat. currents AC22A/AC23A 400...415 V A/A	Type	Order code	Weight/ unit kg
3/2	16	0.75...10	16/16	OT16M3	1SCA022497R0220	0.11
4/3	16	0.75...10	16/16	OT16M4	1SCA022497R0730	0.14
3/2	25	0.75...10	25/20	OT25M3	1SCA022497R0310	0.11
4/3	25	0.75...10	25/20	OT25M4	1SCA022497R0650	0.14
3/2	40	0.75...10	40/23	OT40M3	1SCA022497R0490	0.11
4/3	40	0.75...10	40/23	OT40M4	1SCA022497R0570	0.14
3/3	80	1.5...35	80/75	OT63ML3	1SCA022530R5770	0.27
4/4	80	1.5...35	80/75	OT63ML4	1SCA022530R6400	0.30
3/4	125	10...70	125/90	OT125M3	1SCA022429R9140	0.4
4/6	125	10...70	125/90	OT125M4	1SCA022429R9220	0.5

Manual switch-disconnectors OT16...160, IEC

Ordering information



OT16...40F6



OT63...80F8



OT100...125F8

Front operated 6- and 8-pole switch-disconnectors, base and DIN-rail mounting, IEC

Including protected terminal clamps, IP20. Handle and shaft are not included.

Number of poles	Open air thermal current I_{th} A	Copper cable cross section mm²	Rated operat. currents AC22A/AC23A 400...415 V A/A	Type	Order code	Weight/ unit kg
6	25	0.75...10	16/16	OT16F6	1SCA104834R1001	0.25
6	32	0.75...10	25/20	OT25F6	1SCA104880R1001	0.25
6	40	0.75...10	40/23	OT40F6	1SCA104936R1001	0.25
6	63	1.5...35	63/63	OT63F6	1SCA105379R1001	0.61
6	80	1.5...35	80/75	OT80F6	1SCA105427R1001	0.61
6	115	10...70	100/80	OT100F6	1SCA105021R1001	0.81
6	125	10...70	125/90	OT125F6	1SCA105057R1001	0.81
8	25	0.75...10	16/16	OT16F8	1SCA104836R1001	0.31
8	32	0.75...10	25/20	OT25F8	1SCA104882R1001	0.31
8	40	0.75...10	40/23	OT40F8	1SCA104938R1001	0.31
8	63	1.5...35	63/63	OT63F8	1SCA105381R1001	0.67
8	80	1.5...35	80/75	OT80F8	1SCA105429R1001	0.67
8	115	10...70	100/80	OT100F8	1SCA105022R1001	1.10
8	125	10...70	125/90	OT125F8	1SCA105059R1001	1.10



OT16...40FT3



OT63...80FT3



OT100...125FT3

Front operated switch-disconnectors, door mounting, IEC

Including protected terminal clamps, IP20. Handle and shaft are not included.

Number of poles	Open air thermal current I_{th} A	Copper cable cross section mm²	Rated operat. currents AC22A/AC23A 400...415 V A/A	Type	Order code	Weight/ unit kg
3	25	0.75...10	16/16	OT16FT3	1SCA104838R1001	0.13
4	25	0.75...10	16/16	OT16FT4N2	1SCA105711R1001	0.16
3	32	0.75...10	25/20	OT25FT3	1SCA104884R1001	0.13
4	32	0.75...10	25/20	OT25FT4N2	1SCA104900R1001	0.16
3	40	0.75...10	40/23	OT40FT3	1SCA104940R1001	0.13
4	40	0.75...10	40/23	OT40FT4N2	1SCA104956R1001	0.16
3	63	1.5...35	63/63	OT63FT3	1SCA105382R1001	0.28
4	63	1.5...35	63/63	OT63FT4N2	1SCA105393R1001	0.35
3	80	1.5...35	80/75	OT80FT3	1SCA105431R1001	0.28
4	80	1.5...35	80/75	OT80FT4N2	1SCA105499R1001	0.35
3	115	10...70	100/80	OT100FT3	1SCA105023R1001	0.40
4	115	10...70	100/80	OT100FT4N2	1SCA105031R1001	0.54
3	125	10...70	125/90	OT125FT3	1SCA105060R1001	0.40
4	125	10...70	125/90	OT125FT4N2	1SCA105066R1001	0.54

Manual switch-disconnectors OT16...160, UL

Ordering information for non-fusible disconnect switches



OT16...40F3



OT63...80F3



OT30...100F3

Front operated non-fusible disconnect switches, base and DIN-rail mounting, UL/CSA

Handle and shaft are not included.

Number of poles	Ampere rating	Horsepower rating 3-phase 240 V AC	480 V AC	600 V AC	Type	Order code	Weight/unit kg	lb
	A	HP	HP	HP				
3	20	5	10	10	OT16F3	1SCA104811R1001	0.11	0.24
4	20	5	10	10	OT16F4N2	1SCA104829R1001	0.14	0.31
3	30	7.5	15	20	OT25F3	1SCA104857R1001	0.11	0.24
4	30	7.5	15	20	OT25F4N2	1SCA104886R1001	0.14	0.31
3	40	10	20	25	OT40F3	1SCA104902R1001	0.11	0.24
4	40	10	20	25	OT40F4N2	1SCA104932R1001	0.14	0.31
3	60	15	30	30	OT63F3	1SCA105332R1001	0.27	0.60
4	60	15	30	30	OT63F4N2	1SCA105365R1001	0.3	0.66
3	80	20	40	40	OT80F3	1SCA105798R1001	0.27	0.60
4	80	20	40	40	OT80F4N2	1SCA105413R1001	0.3	0.66
3	30	10	20	30	OT30F3	1SCA105068R1001	0.36	0.79
4	30	10	20	30	OT30F4N2	1SCA108347R1001	0.5	1.10
3	60	20	40	40	OT60F3	1SCA105076R1001	0.36	0.79
4	60	20	40	40	OT60F4N2	1SCA108348R1001	0.5	1.10
3	100	30	50	50	OT100F3	1SCA105004R1001	0.36	0.79
4	100	30	50	50	OT100F4N2	1SCA105018R1001	0.5	1.10

Approvals:
- OT16,25,40,63,80: UL 508. CSA 22-2 No.14
- OT30,60,100: UL 98. CSA 22-2 No.4
- IEC 60947-3



OT16...40F6



OT63...80F8



OT100F8

Front operated 6- and 8-pole non-fusible disconnect switches, base and DIN-rail mounting, UL/CSA

Handle and shaft are not included.

Number of poles	Ampere rating	Horsepower rating 3-phase 240 V AC	480 V AC	600 V AC	Type	Order code	Weight/unit kg	lb
	A	HP	HP	HP				
6	20	5	10	10	OT16F6	1SCA104834R1001	0.25	0.55
6	30	7.5	15	20	OT25F6	1SCA104880R1001	0.25	0.55
6	40	10	20	25	OT40F6	1SCA104936R1001	0.25	0.55
6	60	15	30	30	OT63F6	1SCA105379R1001	0.61	1.35
6	80	20	40	40	OT80F6	1SCA105427R1001	0.61	1.35
6	100	30	50	50	OT100F6	1SCA105021R1001	0.81	1.79
6	100	30	50	50	OT125F6	1SCA105057R1001	0.81	1.79
8	20	5	10	10	OT16F8	1SCA104836R1001	0.31	0.68
8	30	7.5	15	20	OT25F8	1SCA104882R1001	0.31	0.68
8	40	10	20	25	OT40F8	1SCA104938R1001	0.31	0.68
8	60	15	30	30	OT63F8	1SCA105381R1001	0.67	1.48
8	80	20	40	40	OT80F8	1SCA105429R1001	0.67	1.48
8	100	30	50	50	OT100F8	1SCA105022R1001	1.10	2.43

Manual switch-disconnectors OT16...160, UL

Ordering information for non-fusible disconnect switches



OT16...40FT3



OT63...80FT3



OT30...100FT3



OT30...100FT4N2

Front operated non-fusible disconnect switches, door mounting, UL/CSA

Handle and shaft not included.

Number of poles	Ampere rating	Horsepower rating 3-phase 240 V AC	480 V AC	600 V AC	Type	Order code	Weight/unit kg	lb
	A	HP	HP	HP				
3	20	5	10	10	OT16FT3	1SCA104838R1001	0.13	0.29
4	20	5	10	10	OT16FT4N2	1SCA105711R1001	0.16	0.35
3	30	7.5	15	20	OT25FT3	1SCA104884R1001	0.13	0.29
4	30	7.5	15	20	OT25FT4N2	1SCA104900R1001	0.16	0.35
3	40	10	20	25	OT40FT3	1SCA104940R1001	0.13	0.29
4	40	10	20	25	OT40FT4N2	1SCA104956R1001	0.16	0.35
3	60	15	30	30	OT63FT3	1SCA105382R1001	0.28	0.62
4	60	15	30	30	OT63FT4N2	1SCA105393R1001	0.35	0.77
3	80	20	40	40	OT80FT3	1SCA105431R1001	0.28	0.62
4	80	20	40	40	OT80FT4N2	1SCA105499R1001	0.35	0.77
3	30	10	20	30	OT30FT3	1SCA105074R1001	0.44	0.97
4	30	10	20	30	OT30FT4N2	1SCA109443R1001	0.56	1.23
3	60	20	40	40	OT60FT3	1SCA105081R1001	0.44	0.97
4	60	20	40	40	OT60FT4N2	1SCA109444R1001	0.56	1.23
3	100	30	50	50	OT100FT3	1SCA105023R1001	0.44	0.97
4	100	30	50	50	OT100FT4N2	1SCA105031R1001	0.56	1.23

Approvals:
- OT16,25,40,63,80: UL 508. CSA 22-2 No.14
- OT30,60,100: UL 98. CSA 22-2 No.4
- IEC 60947-3

Manual switch-disconnectors OT16...160

Ordering information

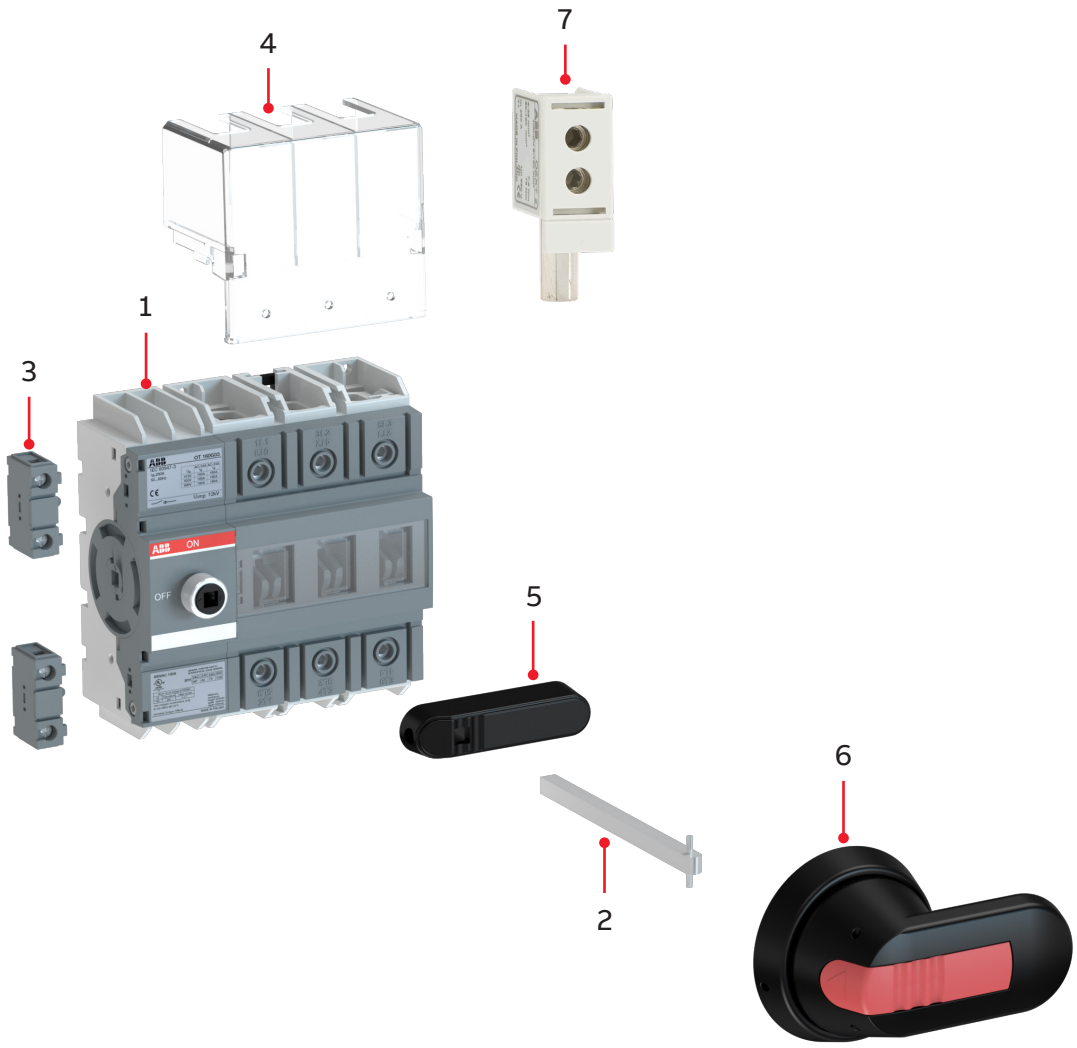

Accessory guide for OT160G (base and DIN-rail mounted switch-disconnectors)

1. Switch-disconnector
2. Extended shaft
3. Auxiliary contact
4. Terminal shroud
5. Handle knob
6. Pistol handle
7. Terminal clamp

Please note that listed accessories are not automatically included in your order.

Manual switch-disconnectors OT16...160, IEC/UL

Ordering information



OT160G03K



OT160G03KL



OT160G04P



OT160GT03P



OT160GT04

OT160G switch-disconnectors, base and DIN-rail mounting, IEC
Non-fusible disconnect switches, base and DIN-rail mounting, UL/CSA

The types with K at the end include direct mount non-lockable handle YAST1. The type with KL includes an lockable direct type handle OHBS16. The base mounted types with P at the end include external handle OHB65J6 and shaft OXP6X210. Front and side operation is possible with the same handle and shaft.

Number of poles	Rated operational currents			Type code	Order code	Weight/ unit	
	UL98 Listed, 600 V	UL 98 Recognized, 600 V	AC22A/ AC23A, 690 V			kg	lb
	A	A	A				
3	100	125	160/160	OT160G03	1SCA135134R1001	1.1	2.43
3	100	125	160/160	OT160G03K	1SCA138208R1001	1.2	2.65
3	100	125	160/160	OT160G03KL	1SCA150028R1001	1.1	2.43
3	100	125	160/160	OT160G03P	1SCA135139R1001	1.3	2.87
4	100	125	160/160	OT160G04	1SCA135135R1001	1.3	2.87
4	100	125	160/160	OT160G04K	1SCA138215R1001	1.4	3.09
4	100	125	160/160	OT160G04KL	1SCA150184R1001	1.3	2.65
4	100	125	160/160	OT160G04P	1SCA135140R1001	1.4	3.09
3	100	125	160/160	OT160G30	1SCA138207R1001	1.1	2.43
3	100	125	160/160	OT160G30K	1SCA138209R1001	1.2	2.65
3	100	125	160/160	OT160G30KL	1SCA150185R1001	1.1	2.43
3	100	125	160/160	OT160G30P	1SCA135138R1001	1.2	2.65
4	100	125	160/160	OT160G40	1SCA138213R1001	1.3	2.87
4	100	125	160/160	OT160G40K	1SCA138214R1001	1.4	3.09
4	100	125	160/160	OT160G40KL	1SCA150186R1001	1.3	2.65
4	100	125	160/160	OT160G40P	1SCA138216R1001	1.4	3.09

Approvals:
- UL98, CSA 22-2 No.4
- IEC 60947-3

OT160G switch-disconnectors, door mounting, IEC
Non-fusible disconnect switches, door mounting, UL/CSA

The door mounted types with P at the end include external handle OHB65J6, shaft OXP6X50 and mounting kit OHZX6. Front and side operation is possible with the same handle and shaft.

Number of poles	Rated operational currents			Type code	Order code	Weight/ unit	
	UL98 Listed, 600 V	UL 98 Recognized, 600 V	AC22A/ AC23A, 690 V			kg	lb
	A	A	A				
Door mounted versions							
3	100	125	160/160	OT160GT03	1SCA135136R1001	1.2	2.65
3	100	125	160/160	OT160GT03P	1SCA135141R1001	1.2	2.65
4	100	125	160/160	OT160GT04	1SCA135137R1001	1.3	2.87
4	100	125	160/160	OT160GT04P	1SCA135142R1001	1.3	2.87
3	100	125	160/160	OT160GT30	1SCA138220R1001	1.2	2.65
3	100	125	160/160	OT160GT30P	1SCA135143R1001	1.2	2.65
4	100	125	160/160	OT160GT40	1SCA138221R1001	1.3	2.87
4	100	125	160/160	OT160GT40P	1SCA135144R1001	1.3	2.87

Approvals:
- UL98, CSA 22-2 No.4
- IEC 60947-3

Manual switch-disconnectors OT16...160

Dimensional drawings

Front operated switch-disconnectors, base and DIN-rail mounting, IEC and UL/CSA

OT16...40F3, _F4

Shafts OXS	Handle OH_S1	Handle OH_S2
A	L min-max	L min-max
mm/in	mm/in	mm/in
85/3.35	107-126/4.22-4.96	93-110/3.66-4.33
105/4.14	127-146/5-5.75	113-130/4.45-5.12
120/4.73	142-161/5.59-6.34	128-145/5.04/5.71
130/5.13	152-171/5.99-6.74	138-155/5.44-6.11
160/6.3	182-201/7.17-7.92	168-185/6.62-7.29
180/7.09	202-221/7.96-8.71	188-205/7.4-8.08
250/9.85	272-291/10.71-11.46	258-275/10.16-10.83
330/13	352-371/13.87-14.62	338-355/13.32-13.99

Shafts OX	Handle OZ331_P
A	L min-max
mm/in	mm/in
60/2.36	92-120/3.62-4.73
85/3.35	117-145/4.61-5.71
105/4.14	137-165/5.4/6.5
115/4.53	147-175/5.79-6.89
130/5.12	162-190/6.38-7.48
155/6.11	187-215/7.37-8.47
200/7.88	232-260/9.14-10.24
300/11.82	332-360/13.08-14.18

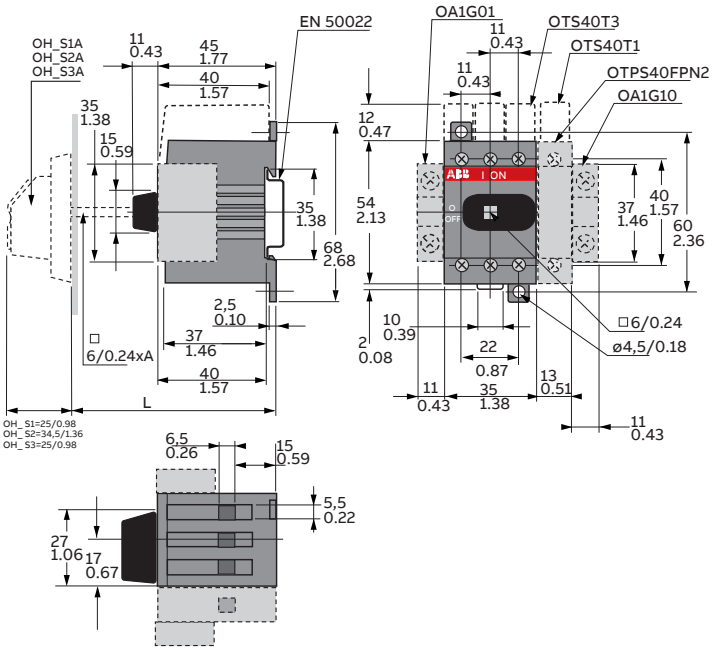

OT63...80F3, _F4

Shafts OXS	Handle OH_S1	Handle OH_S2
A	L min-max	L min-max
mm/in	mm/in	mm/in
85/3.35	123.5-142.5/4.87-5.61	109.5-126.5/4.31-4.98
105/4.14	143.5-162.5/5.65-6.4	129.5-146.5/5.1-5.77
120/4.73	158.5-177.5/6.24-6.99	144.5-161.5/5.69-6.36
130/5.13	168.5-187.5/6.64-7.38	154.5-171.5/6.09-6.75
160/6.3	198.5-217.5/7.82-8.57	184.5-201.5/7.27-7.94
180/7.09	218.5-237.5/8.61-9.36	204.5-221.5/8.06-8.73
250/9.85	288.5-307.5/11.36-12.12	274.5-291.5/10.81-11.48
330/13	368.5-398.5/14.52-15.7	354.5-371.5/13.97-14.63

Shafts OX	Handle OZ331_P
A	L min-max
mm/in	mm/in
60/2.36	108.5-136.5/4.27-5.38
85/3.35	133.5-161.5/5.26-6.36
105/4.14	153.5-181.5/6.05-7.15
115/4.53	163.5-191.5/6.44-7.54
130/5.12	178.5-206.5/7.03-8.14
155/6.11	203.5-231.5/8.02-9.12
200/7.88	248.5-276.5/9.79-10.89
300/11.82	348.5-376.5/13.73-14.83

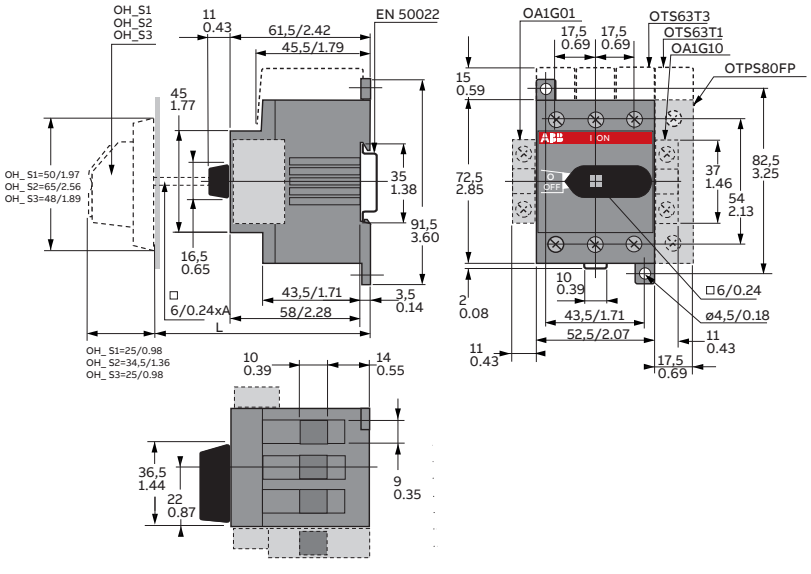

Shafts OXP	Handle OHB45J6	
A	L min-max	
mm/in	mm/in	
150/5.91	177.5/69.88	196.5/77.36
170/6.70	197.5/77.76	216.5/85.24
265/10.43	292.5/115.16	311.5/122.64
400/15.75	427.5/168.31	446.5/175.79

Main dimensions mm, inches

Manual switch-disconnectors OT16...160

Dimensional drawings

Front operated 6- and 8-pole switch-disconnectors, base and DIN-rail mounting, IEC and UL/CSA

OT16...40F6, _F8

Shafts OXS	Handle OH_S1	Handle OH_S2
A	L min/max	L min/max
mm/in	mm/in	mm/in
85/3.35	110-120/4.33-4.73	124-136/4.88-5.36
105/4.14	130-140/ 5.12-5.51	144-156/5.67-6.14
120/4.73	145-155/ 5.71-6.11	159-171/ 6.26-6.74
130/5.13	155-165/ 6.11-6.5	169-181/ 6.66-7.13
160/6.3	185-195/ 7.29-7.69	199-211/7.84-8.31
180/7.09	205-215/ 8.08-8.47	219-231/8.63-9.1
250/9.85	272-285/ 10.71-11.23	289-301/ 11.38-11.86
330/13	355-365/ 13.99-14.38	369-381/ 14.54-15.01

Shafts OX	Handle OZ331_P
A	L min/max
mm/in	mm/in
60/2.36	109-130/4.29-5.12
85/3.35	134-155/5.28-6.11
105/4.14	154-175/6.07-6.89
115/4.53	164-185/6.46-7.29
130/5.12	179-200/7.06-7.88
155/6.11	204-225/8.04-8.86
200/7.88	249-270/3.86-10.64
300/11.82	349-370/13.75-14.58

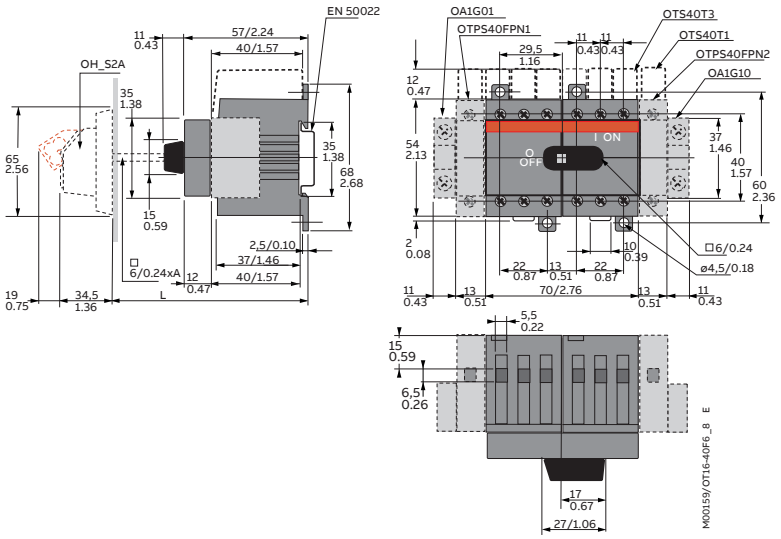

Front operated 6- and 8-pole switch-disconnectors, base and DIN-rail mounting, IEC and UL/CSA

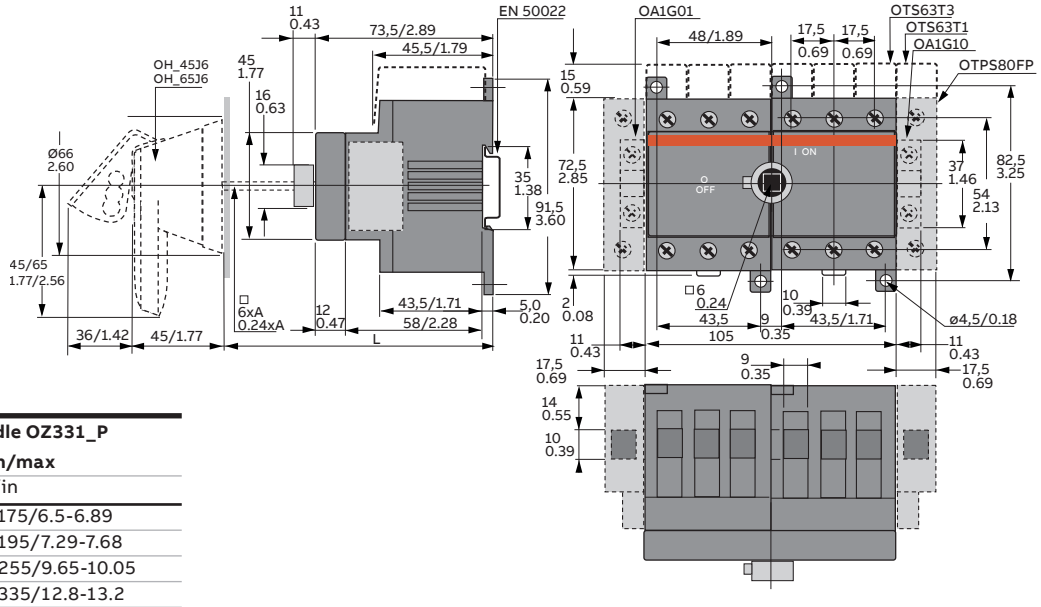

OT63...80F6, _F8

OH_45J6, OH_65J6	Handle OZ331_P
A	L min/max
mm/in	mm/in
130/5.12	165-175/6.5-6.89
150/5.91	185-195/7.29-7.68
210/8.27	245-255/9.65-10.05
290/11.42	325-335/12.8-13.2
360/14.18	395-405/15.56-15.96
430/16.94	465-475/18.32-18.71

Main dimensions mm, inches

Manual switch-disconnectors OT16...160

Dimensional drawings

Front operated switch-disconnectors, door mounting, IEC

OT16...40FT3, _FT4, door mounting

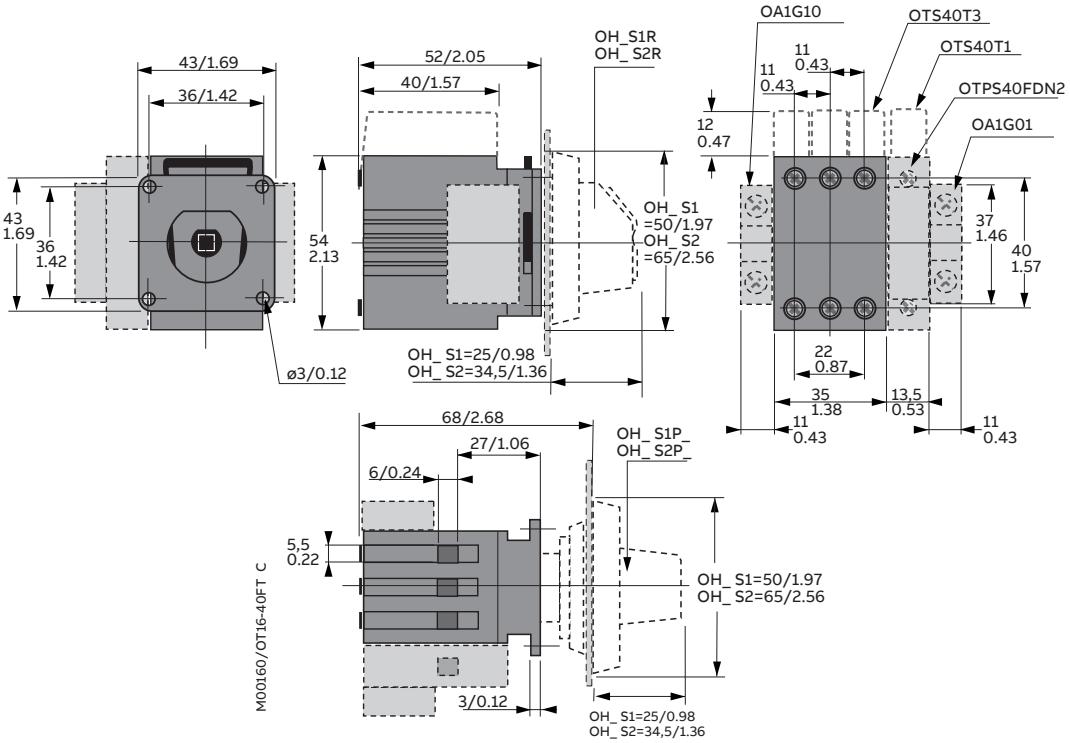

OT63...80FT3, _FT4, door mounting

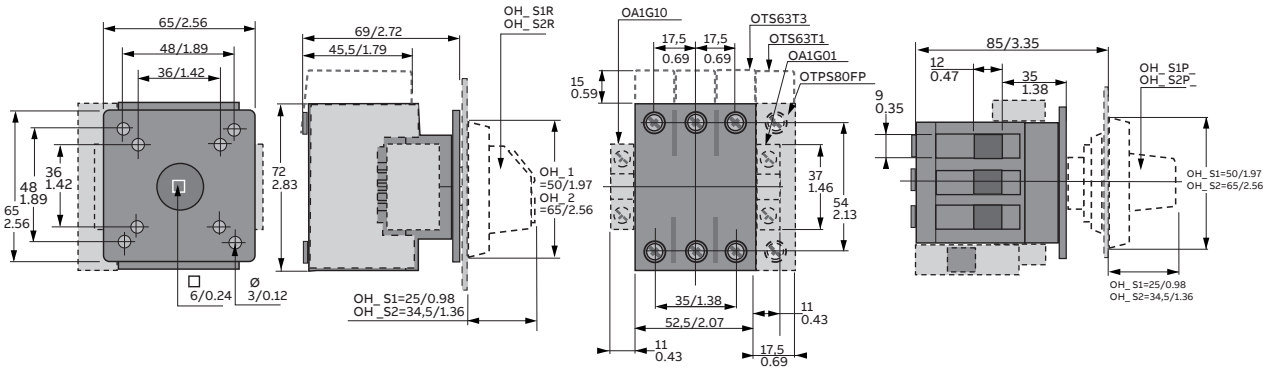

Main dimensions mm, inches

Manual switch-disconnectors OT16...160

Dimensional drawings

Front operated switch-disconnectors, installation switches, base and DIN-rail mounting, IEC

OT16...40M

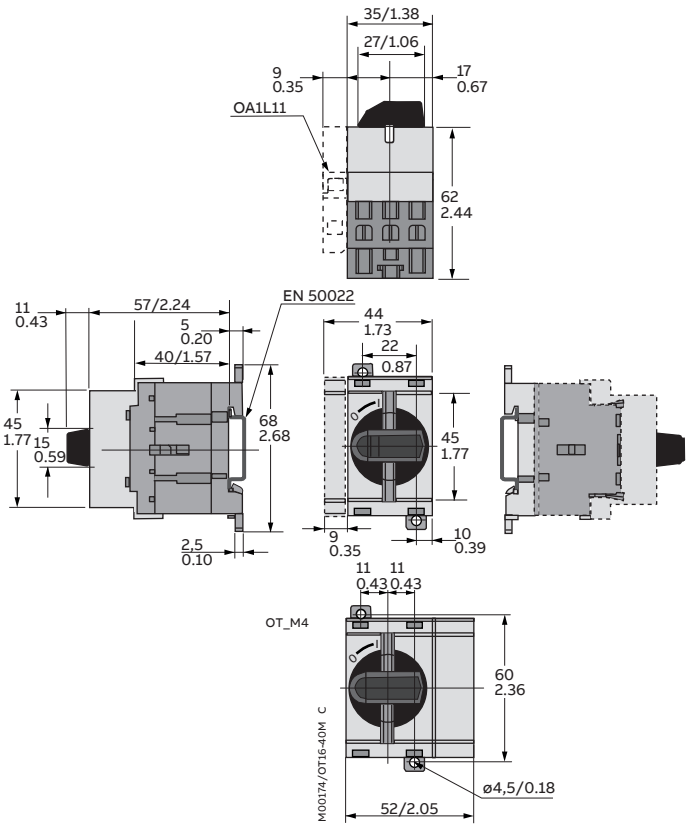

Front operated switch-disconnectors, base and DIN-rail mounting, IEC and UL/CSA

OT63ML

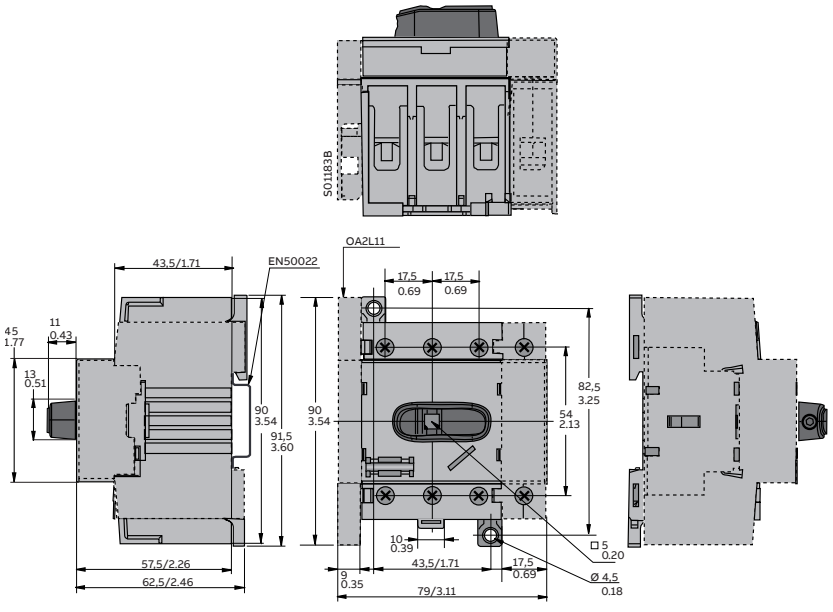

Main dimensions mm, inches

Manual switch-disconnectors OT16...160

Dimensional drawings

OT30, 60, 100, 125F3, _F4

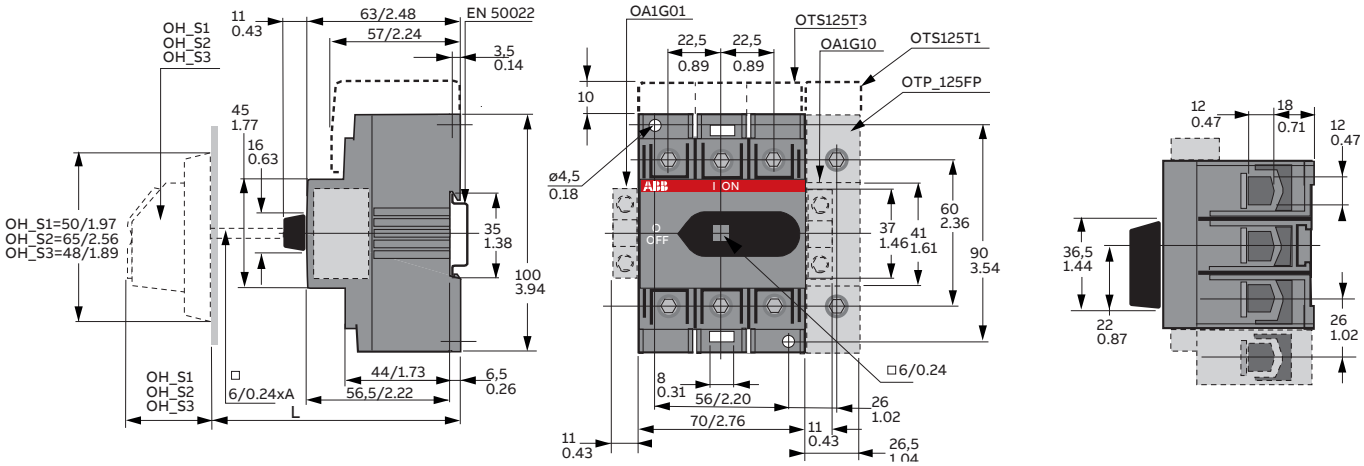

Shafts OXS	Handle OH_S2	Handle OH_S1
A	L min-max	L min-max
mm/in		
85/3.35	127-139/5-5.48	113-123/4.45-4.85
105/4.14	147-159/5.79-6.26	133-143/5.24-5.63
120/4.73	162-174/6.38-6.85	148-158/5.83-6.22
130/5.13	172-184/6.77-7.25	158-168/6.22-6.62
160/6.3	202-214/7.96-8.43	188-198/7.4-7.8
180/7.09	222-234/8.75-9.22	208-218/8.19-8.59
250/9.85	292-304/11.5-11.98	278-288/10.95-11.34
330/13	372-384/14.65-15.13	358-368/14.1-14.5

Shafts OX	Handle OZ331_P
A	L min-max
mm/in	
60/2.36	112-133/4.41-5.24
85/3.35	137-158/5.4-6.22
105/4.14	157-178/6.18-7.01
115/4.53	167-188/6.58-7.4
130/5.12	182-203/7.17-8
155/6.11	207-228/8.16-8.98
200/7.88	252-273/9.93-10.75
300/11.82	352-373/13.87-14.69

Shafts OXP	Handle OHB45J6	
A	L min-max	
mm/in	mm/in	
150/5.91	161/63.39	180/70.87
170/6.70	181/71.26	200/78.74
265/10,43	276/108.66	295/116.14
400/15.75	411/161.81	430/169.29

OT100...125F6, _F8

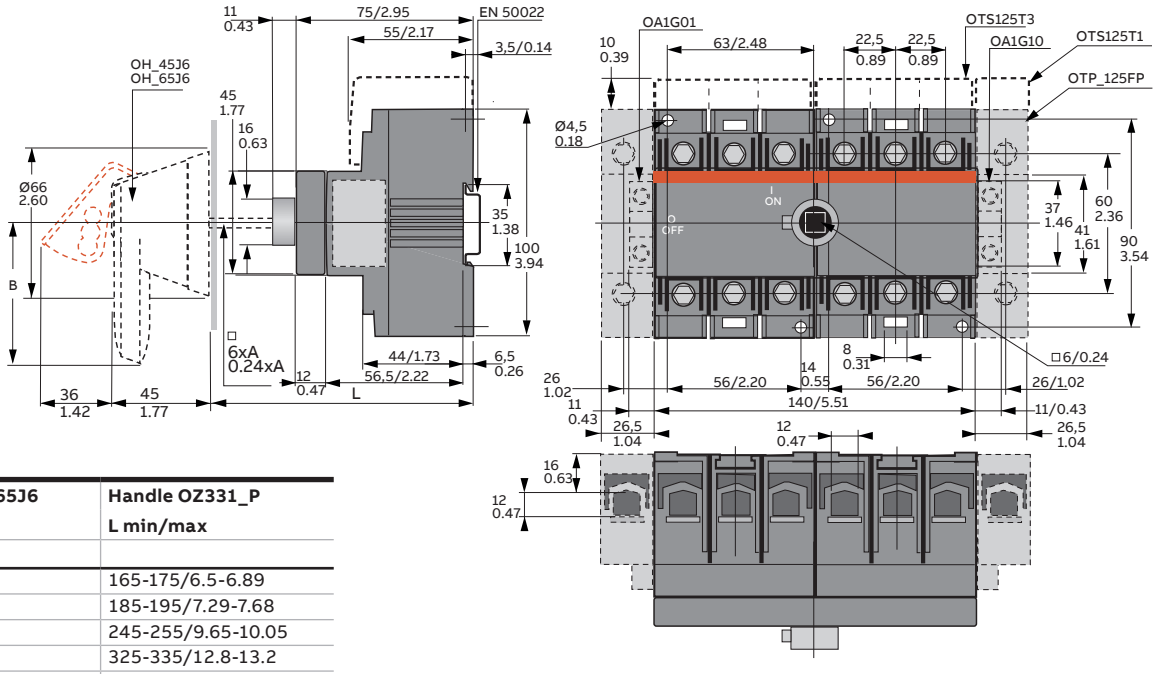

OH_45J6 OH_65J6	Handle OZ331_P
A	L min/max
mm/in	
130/5.12	165-175/6.5-6.89
150/5.91	185-195/7.29-7.68
210/8.27	245-255/9.65-10.05
290/11.42	325-335/12.8-13.2
360/14.18	395-405/15.56-15.96
430/16.94	465-475/18.32-18.71

Main dimensions mm, inches

Manual switch-disconnectors OT16...160

Dimensional drawings

Front operated switch-disconnectors, door mounting, IEC and UL/CSA

OT100...125FT3, _FT4, door mounting

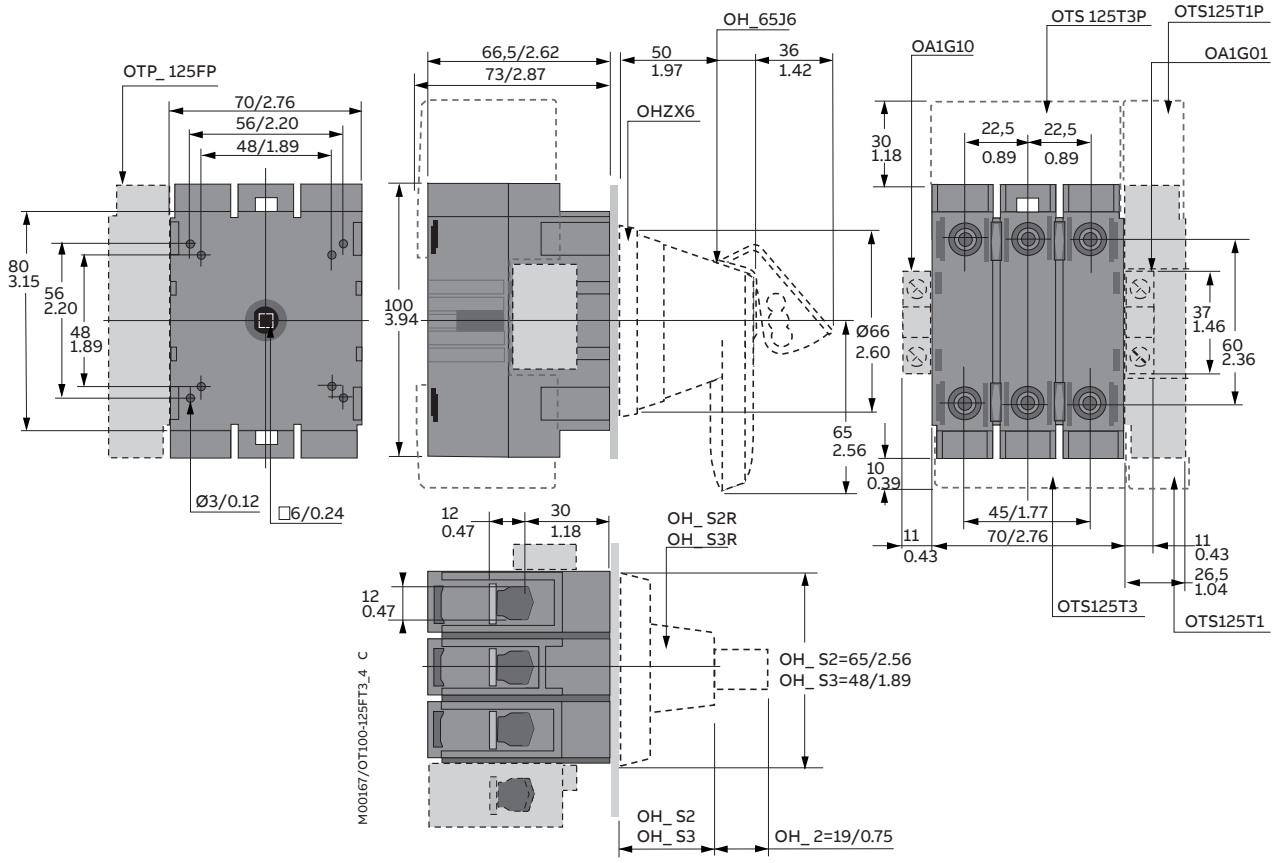

Main dimensions mm, inches

02

Manual switch-disconnectors OT16...160

Dimensional drawings

Front operated switch-disconnectors, base and DIN-rail mounting, IEC

OT125FL3 and OT125FLA3

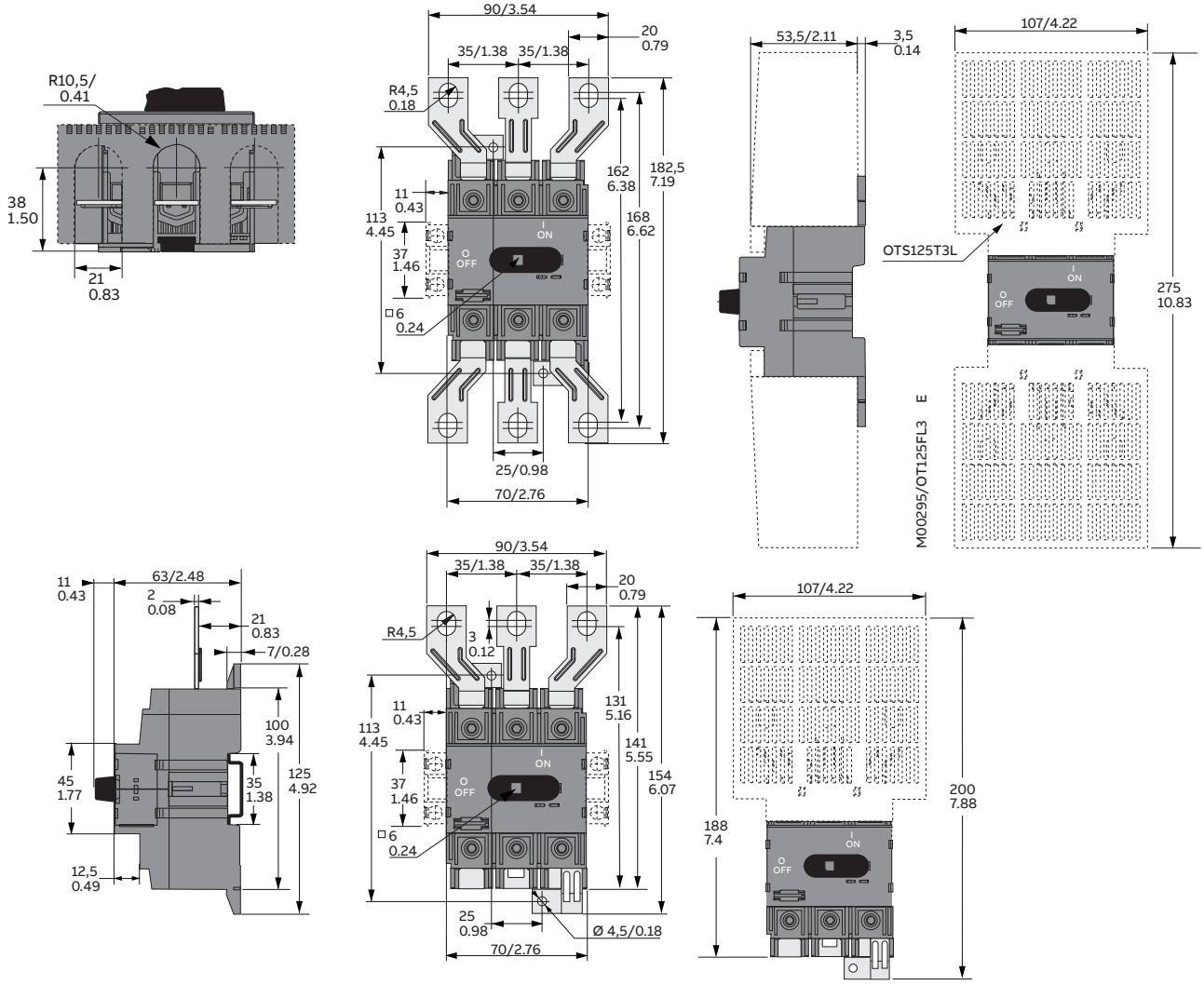

Main dimensions mm, inches

Manual switch-disconnectors OT16...160

Dimensional drawings

Front operated switch-disconnectors, installation switches, base and DIN-rail mounting, IEC

OT125M

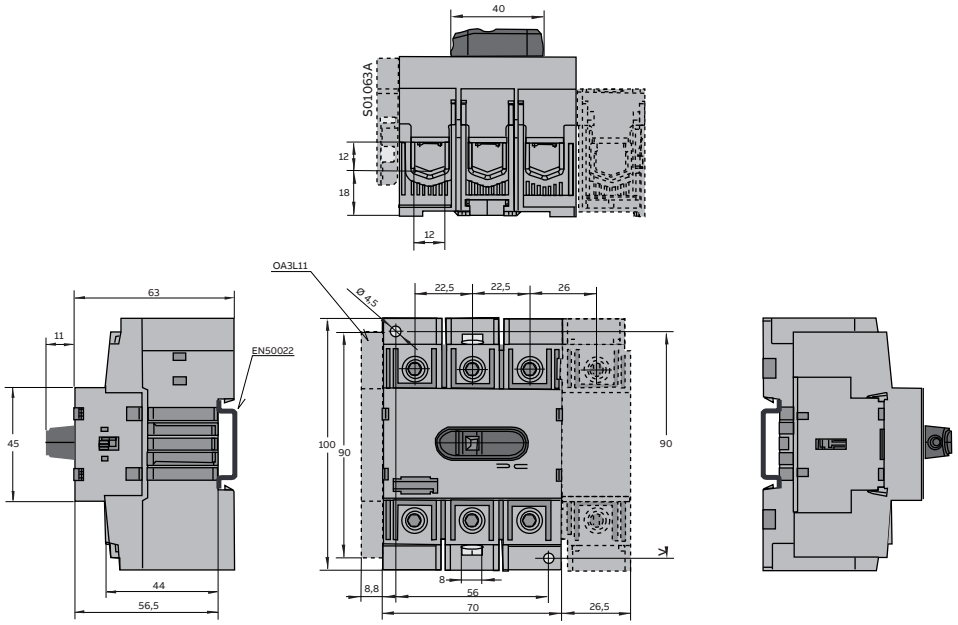

Manual switch-disconnectors OT16...160

Dimensional drawings

OT160G switch-disconnectors, IEC and UL/CSA

OT160G03/04_

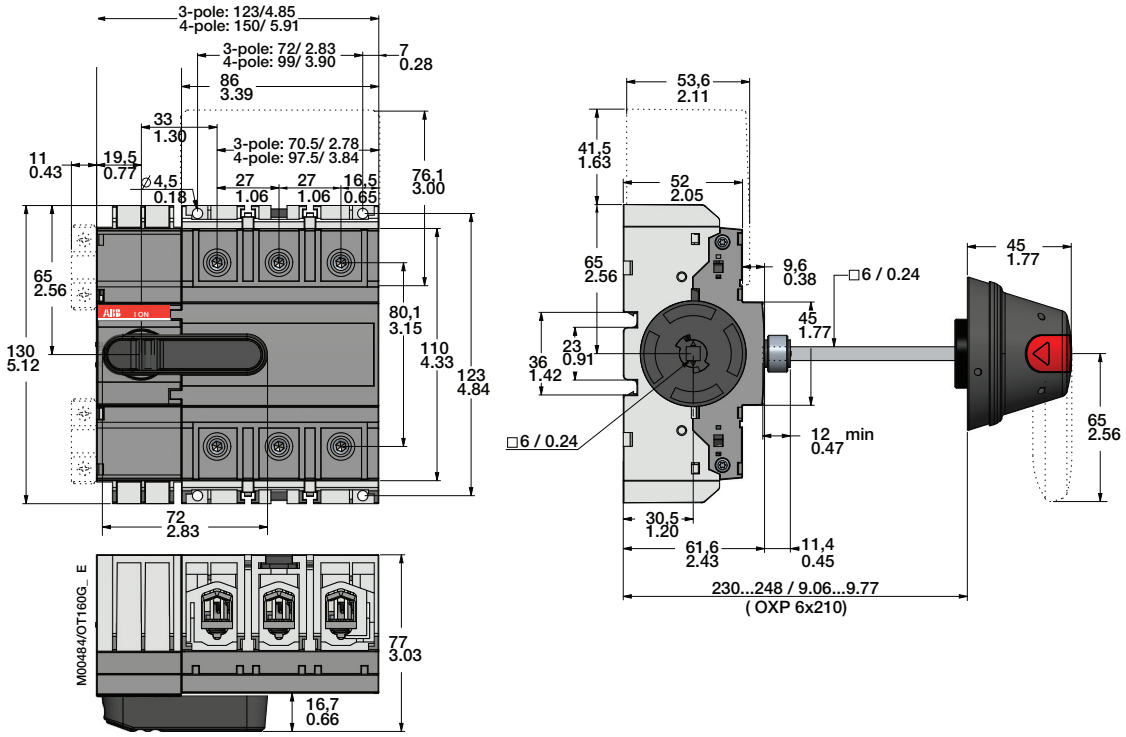

OT160GT03/04_

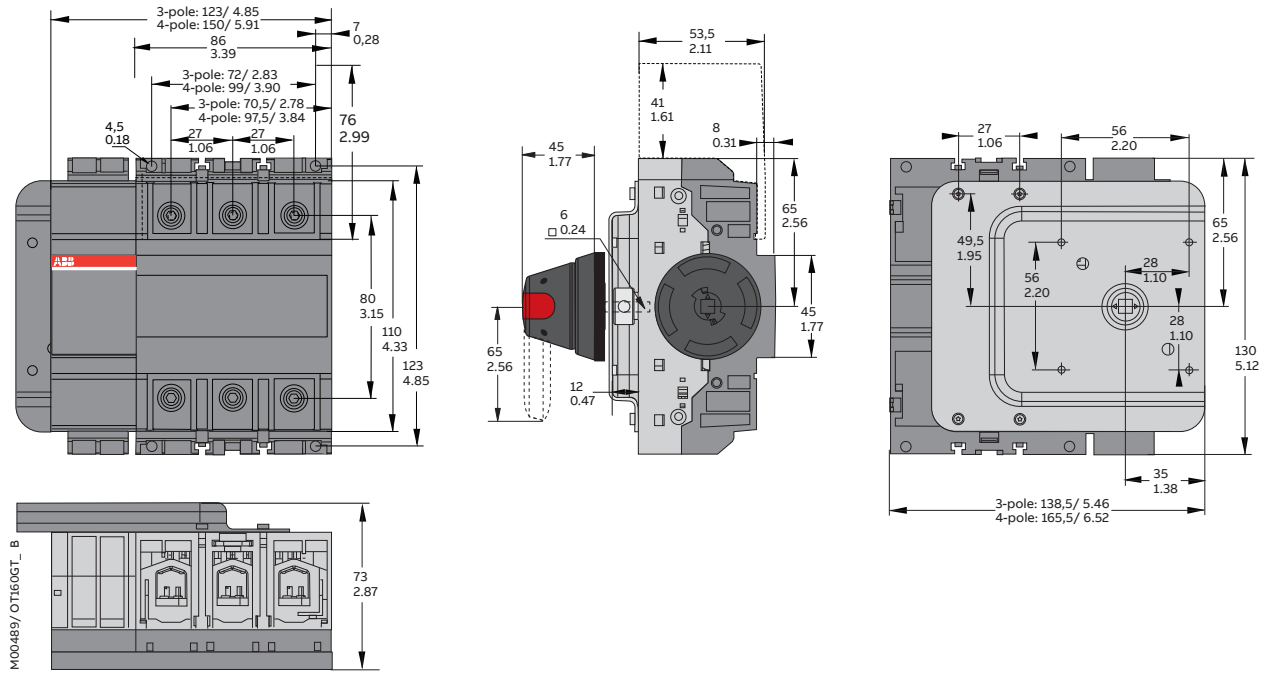

Main dimensions mm, inches



Accessories for manual switch-disconnectors OT16...160

Ordering information for handle knobs


OHBS1


OHRS2


OHBS3


OHRS3


OHRS9


OHBS11


OHBS12

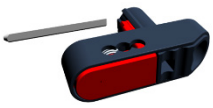
OHBS16

Handle knobs for base and DIN-rail mounted switches

Mounting directly to the switch, no shaft needed. Packing includes 10pcs.

Type	Order code	Colour	Handle length mm	Weight/ unit kg
OHBS1	1SCA109087R1001	Black	31	0.01
OHBS1/1*)	1SCA109088R1001	Black	31	0.01
OHBS2	1SCA109089R1001	Black	40	0.01
OHBS2/1*)	1SCA109090R1001	Black	40	0.01
OHBS3	1SCA108320R1001	Black	39	0.01
OHBS3/1*)	1SCA108319R1001	Black	39	0.01
OHBS9	1SCA108665R1001	Black	72	0.01
OHBS9/1*)	1SCA108689R1001	Black	72	0.01
OHBS11	1SCA109092R1001	Black	57	0.01
OHBS12	1SCA108252R1001	Black	37	0.01
OHBS13	1SCA112046R1001	Black	72	0.019
OHBS13/1*)	1SCA112047R1001	Black	72	0.019
OHBS14	1SCA152488R1001	Black	40	0.01
OHBS16	1SCA149863R1001	Black	74	0.01
OHRS1	1SCA109095R1001	Red	31	0.01
OHRS1/1*)	1SCA109096R1001	Red	31	0.01
OHRS2	1SCA108598R1001	Red	40	0.01
OHRS2/1*)	1SCA108599R1001	Red	40	0.01
OHRS3	1SCA108667R1001	Red	39	0.01
OHRS3/1*)	1SCA108688R1001	Red	39	0.01
OHRS9	1SCA108666R1001	Red	72	0.01
OHRS9/1*)	1SCA108690R1001	Red	72	0.01
OHRS12	1SCA108253R1001	Red	37	0.01
YAST1	1SCA022301R5350	Black	72	0.023

*) delivery batch 1pc

Direct handles for OT16F...125F_ and OT160G_

		Knob non-padlockable	Knob padlockable	Knob shaft through non-padlockable	Knob shaft through padlockable
Switches 3- and 4-pole	OT16...40F3/F4	OHBS1, OHRS1 OHBS3, OHRS3	OHBS7 (3P) OHBS8 (4P)	Standard knob	OHBS12, OHRS12
	OT63...80F3/F4	OHBS1, OHRS1 OHBS3, OHRS3	OHBS2, OHRS2	Standard knob	OHBS14
	OT100...125F3/F4	OHBS3, OHRS3	OHBS2, OHRS2	Standard knob	OHBS11 1), OHBS14
	OT30...60F3/F4	OHBS3, OHRS3	OHBS2, OHRS2	Standard knob	OHBS11 1), OHBS14
	OT160G3/4	YAST1		OHBS13, OHRS13	OHBS16 1)
Switches 6- and 8-pole	OT16...40F6/F8	OHBS3, OHRS3		Standard knob	OHBS12, OHRS12
	OT63...80F6/F8	OHBS9, OHRS9			OHBS12, OHRS12
	OT100...125F6/F8	OHBS9, OHRS9			OHBS11 1)
	OT30...60F6/F8	OHBS9, OHRS9			OHBS11 1)
Change-over switches	OT16...40F3C/F4C	OHBS3, OHRS3	OHBS2, OHRS2	Standard knob	OHBS12, OHRS12
	OT63...80F3C/F4C	OHBS3, OHRS3			OHBS12, OHRS12
	OT100...125F3C/F4C	OHBS9, OHRS9			OHBS11 1)

1) Suitable for 3 padlocks with bail diameter 5mm

Accessories for manual switch-disconnectors OT16...160

Ordering information for handles



OHYS7



OHBS8

Adapter handles, for base and DIN-rail mounted installation switches

Mounting directly to the switch, no shaft needed.

Suitable for switches	Colour	Type	Order code	Weight/ unit kg
OT16...40F3	Black	OHBS7	1SCA108546R1001	0.08
OT16...40F4	Black	OHBS8	1SCA108545R1001	0.08
OT16...40F3	Red	OHYS7	1SCA109852R1001	0.08
OT16...40F4	Red	OHYS8	1SCA109862R1001	0.08

Handle type	Shaft through the handle	45 mm cut-out enable*
OHBS7_ , OHRS7_	No	Yes
OHBS8_ , OHRS8_	No	Yes

* in I-position the handle shall remain within the cut-out height



OHBS3AH



OHYS3AH



OHBS2AJ



OHYS2AJ



OHBS2AJ_EH

Selector handles for base and DIN-rail mounted switches

For shaft diameter 6 mm, door drilling 22.5 mm. Indication I-O and ON-OFF.

Suitable for switches	Colour	Type	Order code	Weight/ unit kg
IP54 handles, NEMA 1				
OT16...80F	Black	OHBS1AH	1SCA102680R1001	0.05
	Red-yellow	OHYS1AH	1SCA105290R1001	0.05
Door interlock in ON-position				
OT16...80F	Black	OHBS1AH1	1SCA105210R1001	0.05
	Red-yellow	OHYS1AH1	1SCA105291R1001	0.05
Padlockable with one padlock with bail diameter 5...6.3 mm				
OT16...125F	Black	OHBS3AH	1SCA105234R1001	0.05
	Red-yellow	OHYS3AH	1SCA105325R1001	0.05
Padlockable with one padlock with bail diameter 5...6.3 mm, door interlock in ON-position				
OT16...125F	Black	OHBS3AH1	1SCA105235R1001	0.05
	Red-yellow	OHYS3AH1	1SCA105326R1001	0.05
IP65 handles, NEMA 1, 3R, 12				
Padlockable with max. 3 padlocks with bail diameter 5...8 mm, defeatable door interlock in ON-position, door interlocking in OFF-position when padlocked				
OT16...125F	Black	OHBS2AJ	1SCA105213R1001	0.07
	Red-yellow	OHYS2AJ	1SCA105296R1001	0.07
Padlockable with max. 3 padlocks with bail diameter 5...8 mm, door interlock in ON-position				
OT16...125F	Black	OHBS2AJ1	1SCA105215R1001	0.07
	Red-yellow	OHYS2AJ1	1SCA105297R1001	0.07

Selector handle with metal hasp

IP65 handles, NEMA 1, 3R, 12				
Padlockable with max. 3 padlocks, door interlock in the ON-position, defeatable				
OT16...125F	Black	OHBS2AJEH	1SCA108230R1001	0.07
Padlockable with max. 3 padlocks, door interlock in the ON-position, non-defeatable				
OT16...125F	Black	OHBS2AJ1EH	1SCA105217R1001	0.07

- Door interlocking in ON-position means that the door can not be opened, when the handle is in ON-position. This can be defeated in IP65 types to allow authorized personnel access for inspection. The padlocked handle is not defeatable.

Accessories for manual switch-disconnectors OT16...160

Ordering information for handles



OHBS3PH, RH



OHYS3PH, RH



OHBS2PJ, RH



OHYS2PJ, RH

Selector handles for door mounted switches

Indication I-O and ON-OFF. No separate shaft needed.

Suitable for switches	Colour	Type	Order code	Weight/ unit kg
Snap-on mounting, door drilling 22.5 mm				
No padlocking, IP54, NEMA 1				
OT16...40FT	Black	OHBS1PH	1SCA105211R1001	0.05
	Red-yellow	OHYS1PH	1SCA105294R1001	0.05
Padlockable with one padlock, IP54, NEMA 1				
OT16...40FT	Black	OHBS3PH	1SCA105236R1001	0.05
	Red-yellow	OHYS3PH	1SCA105327R1001	0.05
Padlockable with max. 3 padlocks, IP65, NEMA 1, 3R, 12				
OT16...40FT	Black	OHBS2PJ	1SCA105231R1001	0.07
	Red-yellow	OHYS2PJ	1SCA105322R1001	0.07
Screw mounting, hole distance 36 mm				
No padlocking, IP54, NEMA 1				
OT16...80FT	Black	OHBS1RH	1SCA105212R1001	0.05
	Red-yellow	OHYS1RH	1SCA105295R1001	0.05
Padlockable with one padlock, IP54, NEMA 1				
OT16...80FT	Black	OHBS3RH	1SCA105237R1001	0.05
	Red-yellow	OHYS3RH	1SCA105328R1001	0.05
Padlockable with max. 3 padlocks, IP65, hole distance 36/48 mm, NEMA 1, 3R, 12				
OT16...125FT	Black	OHBS2RJ	1SCA105232R1001	0.07
	Red-yellow	OHYS2RJ	1SCA105323R1001	0.07

- Door interlocking in ON-position means that the door can not be opened, when the handle is in ON-position.
This can be defeated in IP65 types to allow authorized personnel access for inspection. The padlocked handle is not defeatable.

Accessories for manual switch-disconnectors OT16...160

Ordering information for handles



OZ331_B



OZ331_RY



OZ371PB



OHB_



OHY_



OHG45J6

Round padlockable handles for base and DIN-rail mounted switches OT16...125

Padlockable in 0-position, max 3 padlocks with max 8 mm hasp diameter.
Indication I-O and ON-OFF.

Suitable for switches	Colour	Type	Order code	Weight/ unit kg
One hole mounting handle, IP65, NEMA 4X outdoor, size 66x66				
OT16...125F, OT30...100F	Black	OZ331SPB	1SCA112983R1001	0.05
	Red-yellow	OZ331SPRY	1SCA113097R1001	0.05
IP67, NEMA 4X, size 66x66				
OT16...125F, OT30...100F	Black	OZ331P67B	1SCA111427R1001	0.04
	Red-yellow	OZ331P67RY	1SCA111429R1001	0.04
Handles with door coupling in ON-position, not defeatable, IP65, NEMA 4X, size 66x66				
Shaft alignment ring for OZ371P_ handle, see page 47.				
OT16...125F, OT30...100F	Black	OZ371PB	1SCA111684R1001	0.05
	Red-yellow	OZ371PRY	1SCA111685R1001	0.05

Pistol handles for base and DIN-rail mounted switches OT16...125F and OT160G

For shaft diameter 6 mm, IP65, NEMA 1, 3R, 12, padlockable with three padlocks in OFF-position, door interlock in ON-position. Screw fixing from the back side of the handle. No screws on the front ensures double insulation. Indication in types OHB and OHY: I-0, ON-OFF, in types OHG: I-0.

Handle length mm	Colour	Type	Order code	Weight/ unit kg
45	Black	OHB45J6	1SCA022380R8770	0.10
45	Red-yellow	OHY45J6	1SCA022380R8930	0.10
45	Grey	OHG45J6	1SCA022380R8850	0.10

- Door interlocking in ON-position means that the door can not be opened, when the handle is in ON-position. Door interlocking can be defeated in IP65 types to allow authorized personnel access for inspection.
- Handles padlockable in ON and OFF-positions available on request.
- The door is locked when the handle is padlocked. The padlocked handle is not defeatable.

Pistol handle mounting kit for OT 100...125 FT_ and OT160GT switches

Mounting kit OHZX6 consists of door mount handle fixing plate, screws and shaft. The pistol handle is not included.



OHZX6

Suitable for switches	Colour	Type	Order code	Weight/ unit kg
OT100...125 FT_, OT30...100FT, OT160GT	Black	OHZX6	1SCA022559R5670	0.01

Accessories for manual switch-disconnectors OT16...160

Dimensional drawings for handles

Minimum distance L between the hinge, handle and shaft

Sizes	Length L	Handle type
A	mm/in	
OT16...125	75/2.95	OH_1, OH_2, OH_3

S00374C

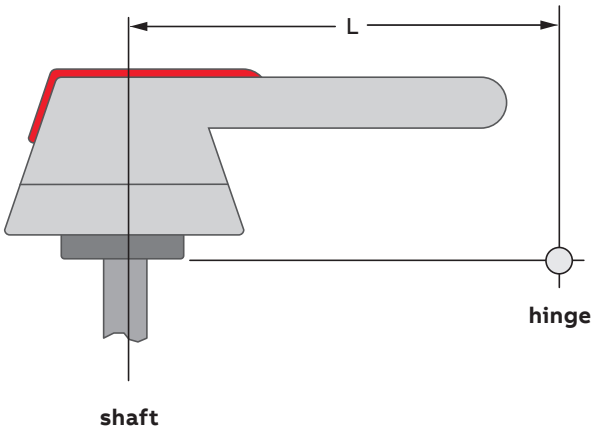

Round padlockable handle types OZ331P_ and OZ371P_

Handle type	OZ331P_	OZ371_
	mm/in	mm/in
A	24/0.94	21/0.83
B	3-10/0.12-0.39	4-5/0.16-0.20

KE00031

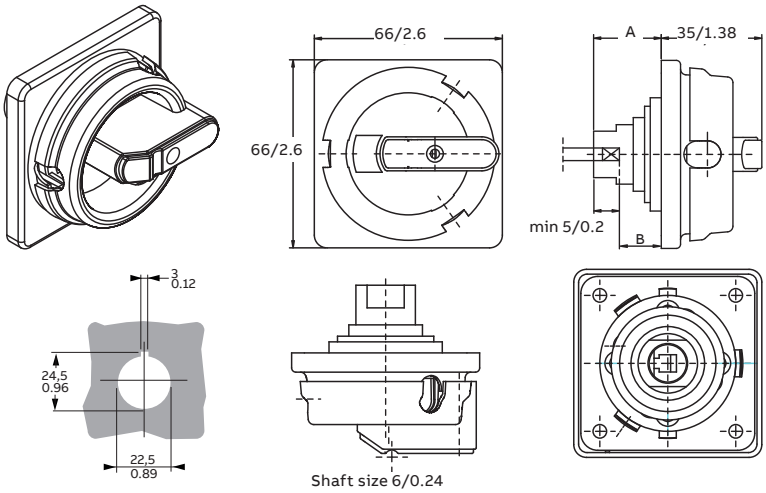

Pistol handle

Handle type	Shaft diameter B	Length L
	mm/in	mm/in
OH_45J6	6/0.24	45/1.77

Door drilling for OH_ handles:

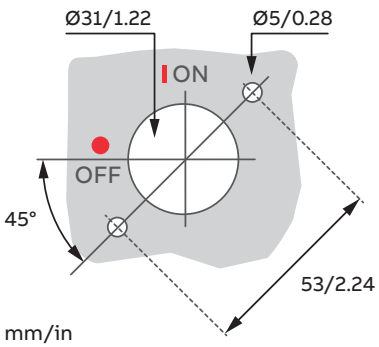

mm/in

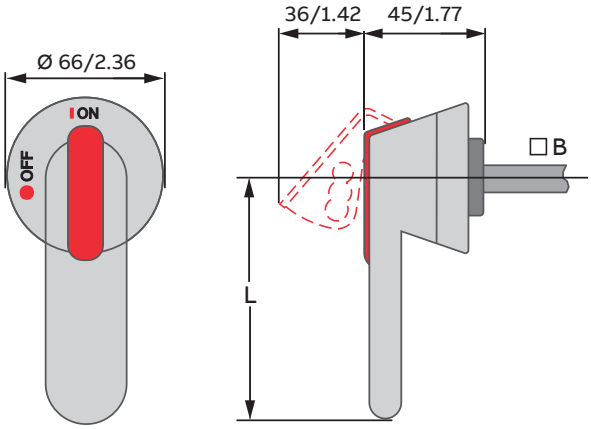

Main dimensions mm, inches

Accessories for manual switch-disconnectors OT16...160

Dimensional drawings for handles

Handles for base and DIN-rail mounted switches

OH_S1A_, OH_S3A_

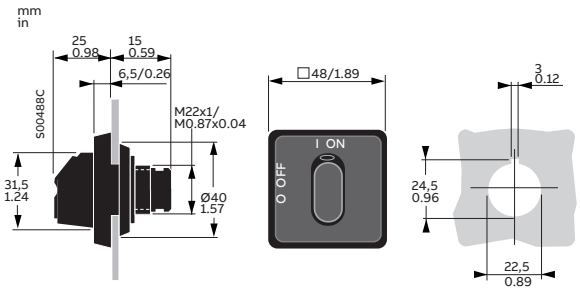

OH_S2A_

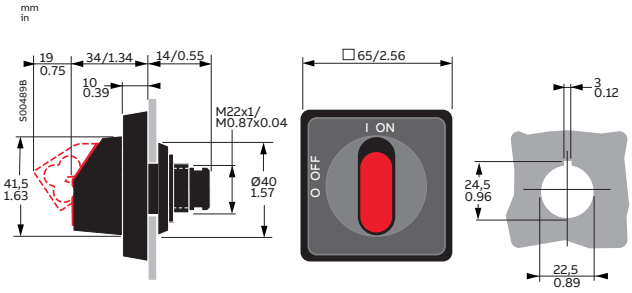

OH_

Handle type	Length
	mm/in
OH_S1A_	31.5/1.24
OH_S3A_	37.5/1.48

Handles for door mounted switches (snap-on mounting)

OH_S1P_, OH_S3P_

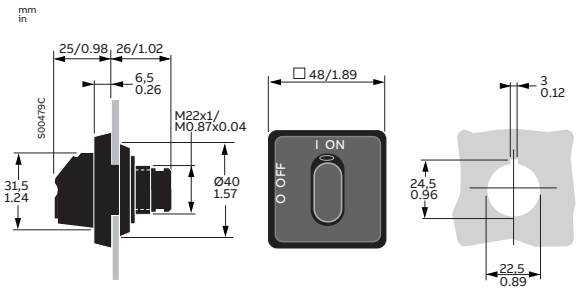

OH_S2P_

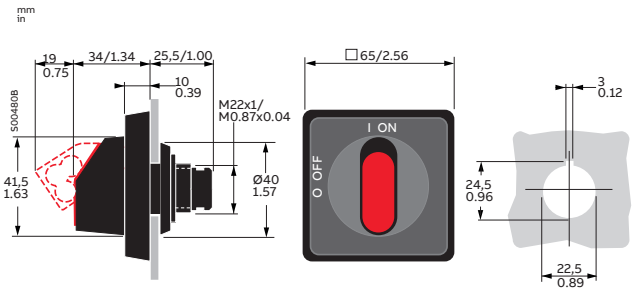

OH_

Handle type	Length
	mm/in
OH_S1P_	31.5/1.24
OH_S3P_	37.5/1.48

Handles for door mounted switches (screw-mounting)

OH_S1R_, OH_S3R_

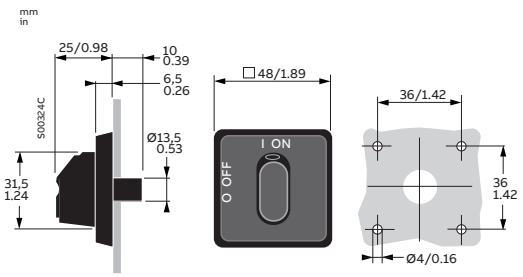

OH_S2R_

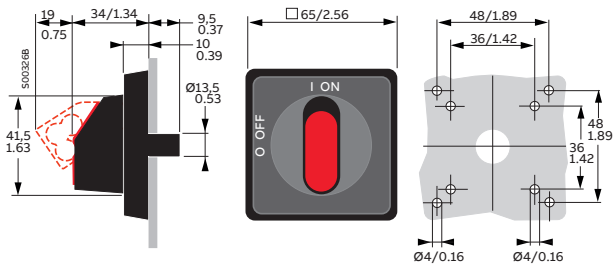

OH_

Handle type	Length
	mm/in
OH_S1P_	31.5/1.24
OH_S3P_	37.5/1.48

Main dimensions mm, inches

Accessories for manual switch-disconnectors OT16...160

Ordering information for legend plates



OPBS1



OPB2



OPG2



OPS2



OPBS1EN1



OPSS1EN1



OPB2EN1



OPG2EN1



OPS2EN1

Legend plates for selector handles

Colour	Type	Order code	Weight/ unit kg
Plain plates for OH 1_ and OH 3_handles.			
Black	OPBS1	1SCA111519R1001	0.01
Yellow	OPYS1	1SCA111528R1001	0.01
Silver	OPSS1	1SCA111523R1001	0.01
Grey	OPGS1	1SCA111563R1001	0.01
Plain plates for OH 2_ handles.			
Black	OPB2	1SCA022353R4110	0.01
Yellow	OPY2	1SCA022353R4200	0.01
Silver	OPS2	1SCA022353R4460	0.01
Grey	OPG2	1SCA022353R4380	0.01
Printed plates for OH 1_ and OH3_ handles. Text: MAIN SWITCH.			
Black	OPBS1EN1	1SCA111520R1001	0.01
Yellow	OPYS1EN1	1SCA111530R1001	0.01
Silver	OPSS1EN1	1SCA111525R1001	0.01
Grey	OPGS1EN1	1SCA111526R1001	0.01
Printed plates for OH 2_ handles. Text: MAIN SWITCH.			
Black	OPB2EN1	1SCA022400R2070	0.01
Yellow	OPY2EN1	1SCA022400R2740	0.01
Silver	OPS2EN1	1SCA022400R2230	0.01
Grey	OPG2EN1	1SCA022400R2310	0.01

Accessories for manual switch-disconnectors OT16...160

Dimensional drawings for legend plates and labelling accessories



OPB3

Legend plates for pistol handles

Colour	Type	Order code	Weight/ unit kg
Holder			
Black	OPB3	1SCA022679R3410	0.01
Yellow	OPY3	1SCA022695R0450	0.01

Dimensions of legend plate for pistol handles

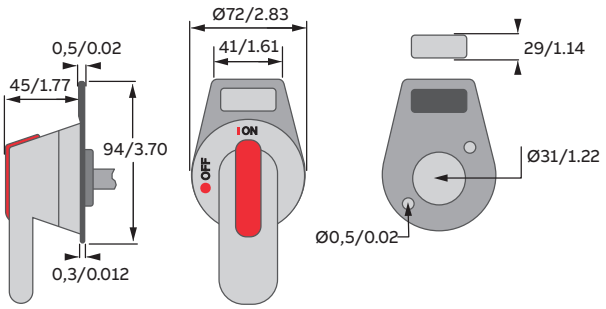

Main dimensions mm, inches

Door drilling for OP_ handles:

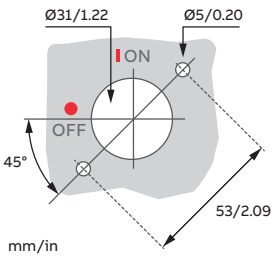

Accessories for manual switch-disconnectors OT16...160

Ordering information for shafts

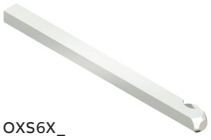

OXS6X_



OX6X_

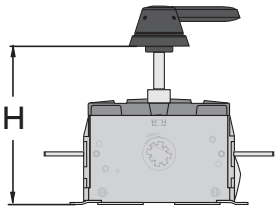

OXP_X_

Shafts

Suitable for all the switches in this section, OT16...125F and OT160G.

Shaft diameter 6 mm.

Shaft length	Mounting depth H	Type	Order code	Weight/ unit
mm	mm			kg
For selector handles				
85	See dimension drawings	OXS6X85	1SCA101647R1001	0.02
105		OXS6X105	1SCA108043R1001	0.02
120		OXS6X120	1SCA101654R1001	0.03
130		OXS6X130	1SCA101655R1001	0.03
160		OXS6X160	1SCA101656R1001	0.04
180		OXS6X180	1SCA101659R1001	0.04
250		OXS6X250	1SCA101660R1001	0.05
330		OXS6X330	1SCA101661R1001	0.05
For round padlockable handles				
60	See dimension drawings	OX6X60	1SCA111459R1001	0.02
85		OX6X85	1SCA111274R1001	0.02
105		OX6X105	1SCA111930R1001	0.02
115		OX6X115	1SCA111931R1001	0.03
130		OX6X130	1SCA111460R1001	0.03
155		OX6X155	1SCA111275R1001	0.04
200		OX6X200	1SCA111932R1001	0.04
300		OX6X300	1SCA111933R1001	0.05
For pistol handles				
150	See dimension drawings	OXP6X150	1SCA022295R5600	0.05
170		OXP6X170	1SCA108224R1001	0.05
265		OXP6X265	1SCA108225R1001	0.08
400		OXP6X400	1SCA108226R1001	0.12



OXP6X_



OXP6X_-45

Twisted shafts

Twisted shafts for pistol handles, the shaft position is rotated 45 degrees.
Shaft diameter 6 mm.

Shaft length	Mounting depth H	Type	Order code	Weight/ unit
mm	mm			kg
150	See dimension drawings	OXP6X150-45	1SCA022294R4400	0.05
170		OXP6X170-45	1SCA108227R1001	0.05
265		OXP6X265-45	1SCA108228R1001	0.08
290		OXP6X290-45	1SCA022304R4290	0.09
430		OXP6X430-45	1SCA022860R8100	0.13

- When using long shafts, it is recommended to use shaft support OETLZX58.

Accessories for manual switch-disconnectors OT16...160

Ordering information for shaft accessories



OZG71

Shaft alignment ring

Improves the alignment of the handle.

Suitable for handle	Colour	Type	Order code	Weight/ unit kg
Selector handles OH_1...3	Black	OHZX11	1SCA022708R3170	0.23
Round padlockable handle OZ371P_	Black	OZG71	1SCA111686R1001	0.05

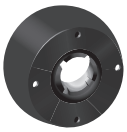

OHZX14

Extension ring for pistol handles

Improves the alignment of the handle.

Suitable for handle	Colour	Type	Order code	Weight/ unit kg
OHB_	Black	OHZX14	1SCA022851R6590	0.06



OETLZX58

Shaft support for long shafts

Supporting 6 mm shaft longer than 400 mm.

Suitable for switches	Type	Order code	Weight/ unit kg
OT16...125F	OETLZX58	1SCA022068R8220	0.10

Accessories for manual switch-disconnectors OT16...160

Ordering information for auxiliary contacts



OA1G_



OA2G11



1NC



1NO

Auxiliary contact blocks for OT16...125F/FT_ and OT160G_, IP20

Contact numbering according to EN 50013. Snap-on mounting to the side of the switch. I_{th} = 16 A, cable cross section max. 2 x 2.5 mm². Early-break type OA1G10. Early break type auxiliary contacts means that in the switches, the NO aux.contacts break before the main contacts open.

See next pages for performance data, functions and contact timing.

Suitable for switches	Function	Type	Order code	Weight/ unit kg
Mountable on left side, max. 2 pcs				
OT16...125F_, FT_	1NC	OA1G01	1SCA022353R4890	0.03
	1NC	OA1G01AU [1]	1SCA022436R7830	0.03
Mountable on the right side, max. 2 pcs				
OT16...125F_, FT_	1NO	OA1G10	1SCA022353R4970	0.03
	1NO	OA1G10AU [1]	1SCA022436R7910	0.03
Mountable, max. 4 pcs				
OT160G_ and OT160GT_	1NC	OA1G01	1SCA022353R4890	0.03
	1NC	OA1G01AU [1]	1SCA022436R7830	0.03
Mountable, max. 4 pcs				
OT160G_ and OT160GT_	1NO	OA1G10	1SCA022353R4970	0.03
	1NO	OA1G10AU [1]	1SCA022436R7910	0.03
Mountable on both sides, simultaneous function with the main contacts				
OT16...40F_: max. 2NO+2NC, OT63...125F: max. 4NO+4NC [3]				
OT16...125F_	1NO+1NC	OA2G11 [2]	1SCA022379R8100	0.03
Mountable on both sides, simultaneous function with the main contacts				
Snap-on mounting to the switch, including a grey cover, IP 20, width 1/2 module. OT16...125M: 3-pole switches max 2NO+2NC , 4-pole switches max 1NO+1NC.				
OT16...40M_	1NO+1NC	OA1L11	1SCA022555R9870	0.04
OT63ML_	1NO+1NC	OA2L11	1SCA022424R3190	0.04
OT125M_	1NO+1NC	OA3L11	1SCA022555R9950	0.04

[1] Types _AU are gold plated for extremely difficult circumstances and low voltages.
[2] Not mountable on the same side as the fourth pole.
[3]) Contact numbering: (83) (43) (53) 13 21 (61) (31) (71)
(84) (44) (54) 14 22 (62) (32) (72)

Accessories for manual switch-disconnectors OT16...160

Technical data for auxiliary contacts

Performance data of auxiliary contacts according to IEC 60947-5-1

For OA1G_, OA2G_, OA3G_, OA8G_

AC15		DC12			DC13	
U_e	I_e	U_e	I_e	P	I_e	P
V AC	A	VDC	A	W	A	W
230	6	24	10	240	2	50
400	4	72	4	290	0.8	60
415	4	125	2	250	0.55	70
690	2	250	0.55	140	0.27	70
		440	0.1	44		

For OA1G_, OA2G_, OA3G_, OA8G_

U_i	690 V
U_{imp}	4 kV
Pollution degree	3
I_{th}	16 A
Cable size	1...2 x 0.75...2.5 mm²
Maximum fuse	16 A / gG
NEMA	A600, R300, wire size: 18 - 14 AWG, 1(2)

Handle indications and functions

The handle indicates the position of the main contacts of the switch with complete reliability in all situations. If the contacts are welded together, the handle does not reach the OFF-position but remains between ON and OFF, maintaining the door interlock and preventing padlocking.

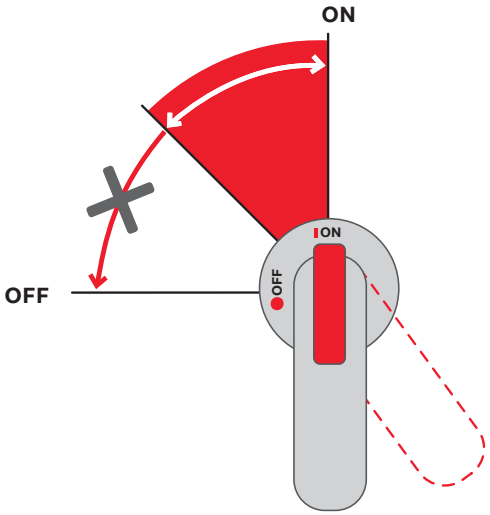

ON and OFF-functions of main and auxiliary contacts

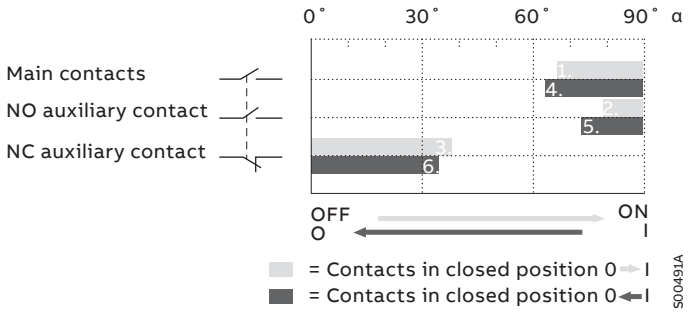

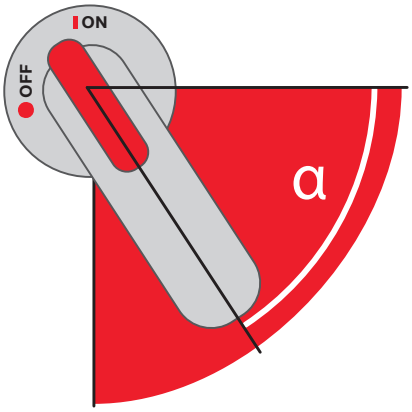

Closing:
1. Main contacts close
2. NO auxiliary contacts close
3. NC auxiliary contacts open

Opening:
4. Main contacts open
5. NO auxiliary contacts open
6. NC auxiliary contacts close

Accessories for manual switch-disconnectors OT16...160

Technical data for auxiliary contacts

ON and OFF-functions of main and auxiliary contacts OT16...160

Auxiliary contact OA2G11, simultaneous function with main contacts.

OT16...40

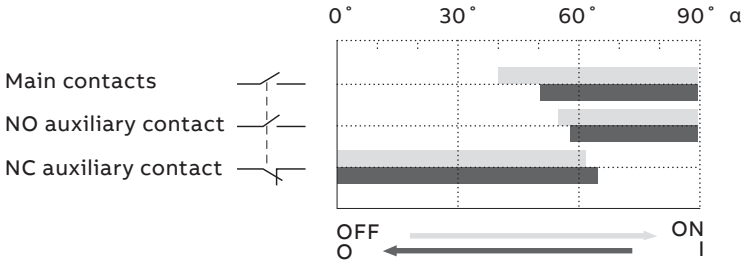

OT63...125

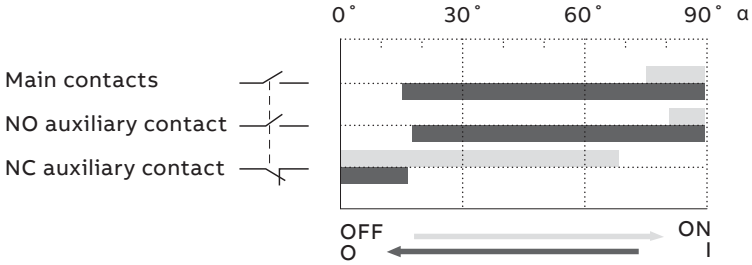

OT160G

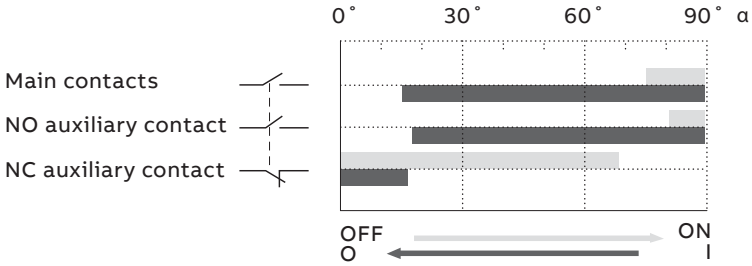

Auxiliary contact	Contact configuration
OA1G10	1NO
OA1G01	1NC
OA2G11*	1NO+1NC

* Auxiliary contact OA2G11, simultaneous function with main contacts.

Accessories for manual switch-disconnectors OT16...160

Ordering information for fourth poles



OTPL125FD

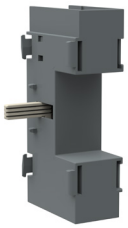

OTPS125FD

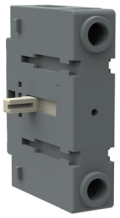

OTPS40FDN1



OTPL80FP

Fourth poles, simultaneous function with the main contacts OT16...125

Mountable on the side of the 3-pole switch frame.

Suitable for switches	Type	Order code	Weight/ unit kg
For DIN rail and base mounted switches			
OT16...40F3/F6	OTPS40FPN1 *)	1SCA105001R1001	0.03
	OTPS40FPN2 *)	1SCA105000R1001	0.06
OT63...80F3/F6	OTPS80FP	1SCA105461R1001	0.14
OT30...60F3/F6	OTPS60FP	1SCA111009R1001	0.30
OT100...125F3/F6	OTPS125FP	1SCA105099R1001	0.30
OT63ML3	OTPS63MLP	1SCA022530R6580	0.08
OT125M3	OTPS125MP	1SCA022436R9110	0.08
For door mounted switches			
OT16...40FT3	OTPS40FDN1 *)	1SCA104999R1001	0.06
	OTPS40FDN2 *)	1SCA104998R1001	0.14
OT63...80FT3	OTPS80FD	1SCA105458R1001	0.30
OT30...60F3/F6	OTPS60FD	1SCA111008R1001	0.30
OT100...125FT3	OTPS125FD	1SCA105096R1001	0.30

Fourth poles, late-break and early-make

Mountable on the side of the switch. There is a time difference between the main poles and the fourth pole.

Suitable for switches	Type	Order code	Weight/ unit kg
For OT switch-disconnectors			
OT16...40F3/F6	OTPL40FP	1SCA105717R1001	0.03
OT63...80F3/F6	OTPL80FP	1SCA105452R1001	0.06
OT100...125F3/F6	OTPL125FP	1SCA105090R1001	0.14
For door mounted switches			
OT16...40FT3	OTPL40FD	1SCA105716R1001	0.03
OT63...80FT3	OTPL80FD	1SCA105451R1001	0.06
OT100...125FT3	OTPL125FD	1SCA105088R1001	0.14

*) N1=On the left side of the switch
N2=On the right side of the switch

Accessories for manual switch-disconnectors OT16...160

Ordering information for neutral and earth terminals



OTPD40FP



OTPD80FP



OTPD80FD

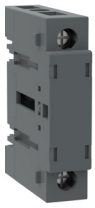

OTPE40FP



OTPE125FP



OTPE125FD

Fixed neutral

Mountable on the side of the switch.

Suitable for switches	Type	Order code	Weight/ unit kg
For base mounted switches			
OT16...40F3/F6	OTPN40FP	1SCA104997R1001	0.03
OT63...80F3/F6	OTPN80FP	1SCA105457R1001	0.06
OT30...60F3/F6	OTPN60FP	1SCA117606R1001	0.14
OT100...125F3/F6	OTPN125FP	1SCA105094R1001	0.14
For door mounted switches			
OT16...40FT3	OTPN40FD	1SCA105718R1001	0.03
OT63...80FT3	OTPN80FD	1SCA105456R1001	0.06
OT30...60F3/F6	OTPN60FD	1SCA111005R1001	0.14
OT100...125FT3	OTPN125FD	1SCA105092R1001	0.14

Detachable neutral

Mountable on the side of the switch.

Suitable for switches	Type	Order code	Weight/ unit kg
For DIN rail and base mounted switches			
OT16...40F3/F6	OTPD40FP	1SCA104994R1001	0.03
OT63...80F3/F6	OTPD80FP	1SCA105445R1001	0.06
OT30...60F3/F6	OTPD60FP	1SCA111014R1001	0.14
OT100...125F3/F6	OTPD125FP	1SCA105083R1001	0.14
For door mounted switches			
OT63...80FT3	OTPD80FD	1SCA105444R1001	0.06

Protective earth

Mountable on the side of the switch.

Suitable for switches	Type	Order code	Weight/ unit kg
For OT switch-disconnectors			
OT16...40F3/F4/F6	OTPE40FP	1SCA104995R1001	0.03
OT63...80F3/F4/F6	OTPE80FP	1SCA105448R1001	0.06
OT30...60F3/F4/F6	OTPE60FP	1SCA111016R1001	0.14
OT100...125F3/F4/F6	OTPE125FP	1SCA105128R1001	0.14
For door mounted switches			
OT16...40FT_	OTPE40FD	1SCA109884R1001	0.03
OT63...80FT_	OTPE80FD	1SCA105446R1001	0.06
OT30...60FT_	OTPE60FD	1SCA111015R1001	0.14
OT100...125FT_	OTPE125FD	1SCA105698R1001	0.14

Accessories for manual switch-disconnectors OT16...160

Ordering information for terminal shrouds



OTS40T3



OTS63T3



OTS125T3



OTS125T3P



OTS63T1



OTS125T1



OTS40T1



OTS125T1P

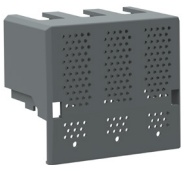

OTS160G1L3

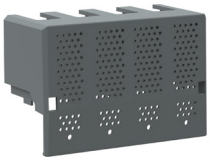

OTS160G1L4

Terminal shrouds

For OT switches, snap-on mounting, transparent IP2X

Suitable for switches	Type	Order code	Weight/ unit kg
For 3-pole OT switches			
OT16...40F3, FT3	OTS40T3	1SCA105317R1001	0.01
OT63...80F3, FT3	OTS63T3	1SCA022353R6750	0.01
OT100...125F3, FT3, OT125M3	OTS125T3	1SCA022379R9680	0.01
For 3-pole OT160G_ switches. Suitable also when provided with terminal clamps OZXT2 or OZXT3			
OT160G, GT	OTS160G1L3	1SCA140414R1001	0.02
For 3-pole OT switches, suitable also when provided with terminal clamps OZXL1 or OZXT1			
OT100...125F3	OTS125T3P	1SCA022491R9890	0.01
For 1 to 4-pole OT switches, shroud for single pole and for fourth pole			
OTP_40F_	OTS40T1	1SCA105314R1001	0.01
OTP_80F_	OTS63T1	1SCA022353R6910	0.01
OTP_125F_, OTPS125MP	OTS125T1	1SCA022379R9760	0.01
For 1 to 4-pole OT switches with terminal clamps OZXL1 or OZXT1, shroud for single pole and for fourth pole			
OT100...125F_	OTS125T1P	1SCA022491R9970	0.01
For 4-pole OT160G_ switches. Suitable also when provided with terminal clamps OZXT2 or OZXT3			
OT160G, GT	OTS160G1L4	1SCA140415R1001	0.03

For 6- and 8-pole switches, 2 pcs of 3- or 4-pole terminal shrouds is needed.

Accessories for manual switch-disconnectors OT16...160

Ordering information for terminal clamps



OZXT1



OZXT2

Terminal clamp sets for Al- and Cu-cables, insulated versions

Suitable for switches	Cable cross section mm²	Type	Order code	Weight/ unit kg
OT63...125	16...50 Al, 2.5...50 Cu	OZXT1 **)	1SCA022469R6310	0.05
OT100...160	16...120 Al/Cu	OZXT2	1SCA022620R7200	0.21
OT100...160	2x(16...50) Al/Cu	OZXT3	1SCA022639R0720	0.21

**) I_n=63 A
- More information on Al/Cu terminal clamps, see the catalogue OZX1A GB.

Accessories for manual switch-disconnectors OT16...160

Ordering information for conversion kits



OWP6D40



OWP6D80



OWP6D125



OTZW8



OWC6D40



OWC6D125

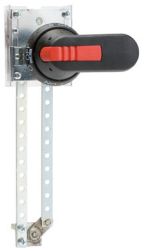

OESAZW1

6 and 8-pole switch mechanism

Suitable for switches	Shaft distance mm	Type	Order code	Weight/ unit kg
Parallel attachment for connecting two 3- or 4-pole switches				
The switches work simultaneously. Mounting directly on the top of two switch-disconnectors, snap-on mounting. The switch size is printed on stickers for the different switch sizes. The fourth pole or auxiliary contacts can be mounted on the outer side of the combination.				
OT16...40		OWP6D40	1SCA022865R4800	0.03
OT63...80		OWP6D80	1SCA022865R5010	0.03
OT30...60, OT100...125		OWP6D125	1SCA022865R5100	0.03
OT160G		OESAZW2	1SCA022078R1600	0.80
Attachment levers for connecting two 3- or 4-pole switches				
Attachment levers provided with holes, enabling different shaft distances. The combination of 3 or 4-pole switches can be mounted either horizontally or vertically.				
OT16...40	45+(0...12)x15	OTZW8	1SCA022421R7600	0.17
OT63...80	60+(0...11)x15	OTZW8	1SCA022421R7600	0.17
OT30...60, OT100...125	75+(0...10)x15	OTZW8	1SCA022421R7600	0.17

See the table of the handles and shafts included in the conversion kits on the following spread.

Change-over switch mechanism

Two switches (3 or 4-pole) are connected with a mechanism operating between I-O-II -positions. The modular change-over switches can be built by adding a compact snap-on kit on the top of two switch-disconnectors. The kits do not require any additional foot print area, only the height is increased 12 mm.

Suitable for switches	Shaft distance mm	Type	Order code	Weight/ unit kg
Change-over kits				
OT16...40		OWC6D40	1SCA022865R4550	0.03
OT63...80		OWC6D80	1SCA022865R4630	0.07
OT30...60, OT100...125		OWC6D125	1SCA104494R1001	0.09
Attachment levers				
OT16...160	90+(0...10)x15	OESAZW1	1SCA022064R3710	0.78

See the table of the handles and shafts included in the conversion kits on the following spread.

Accessories for manual switch-disconnectors OT16...160

Ordering information for conversion kits



OTZW17



OTZW24

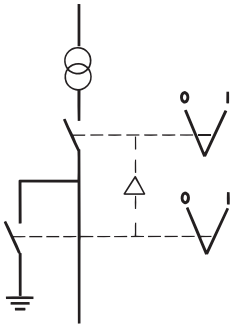

Mechanical interlock

By-pass switch mechanism

A combination of two switches in parallel with a third switch for change-over operation to by-pass, for example, a breaker for maintenance. Three 3 or 4-pole switches needed.

The mechanism is lockable in O-position.

Suitable for switches	Shaft distance mm	Type	Order code	Weight/ unit kg
OT16...125	Between 1 and 2: 90+(0...6)x15 Between 1 and 3: 90+(0...10)x15	OTZW17	1SCA022387R1620	0.88
OT160G	Between 1 and 2: 210+(0...9)x20 Between 1 and 3: 250+(0...9)x20	OTZW26	1SCA022778R7060	3.30

See the table of the handles and shafts included in the conversion kits on the following spread.

Mechanical interlock mechanism

Prevents one switch from moving to ON-position, if the other is not in OFF-position. When mounted upside down, prevents one switch from moving to OFF-position, if the other is not in ON-position. (UPS-usage, make-before-break).

Suitable for switches	Shaft distance mm	Type	Order code	Weight/ unit kg
OT16...125	100	OTZW24	1SCA022639R5610	0.08
OT160G		OTZW10	1SCA022431R5280	1

See the table of the handles and shafts included in the conversion kits on the following spread.

Accessories for manual switch-disconnectors OT16...160

Dimensional drawings for conversion kits

6 and 8-pole switches

OTZW8

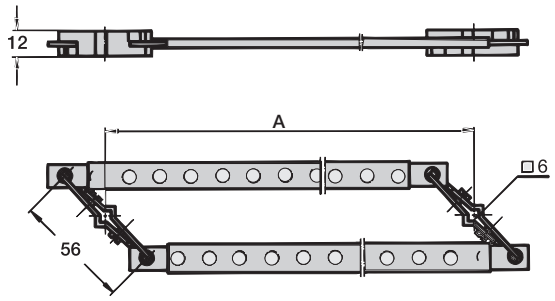

OTZW8

	A (min)
	mm
OT16...40F	45+(0...12)x15
OT63...80F	60+(0...11)x15
OT100...125F	75+(0...10)x15

S00114C

Mechanical interlock

OTZW10

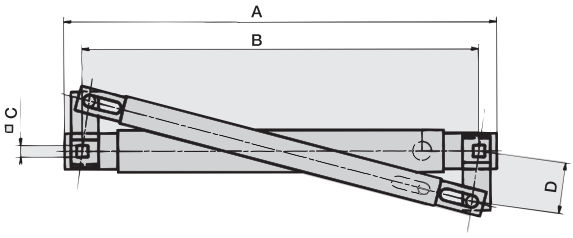

OTZW10

	OTZW10
A	206
B	190
C	6
D	30

S00119A

Change-over switches

OESAZW1

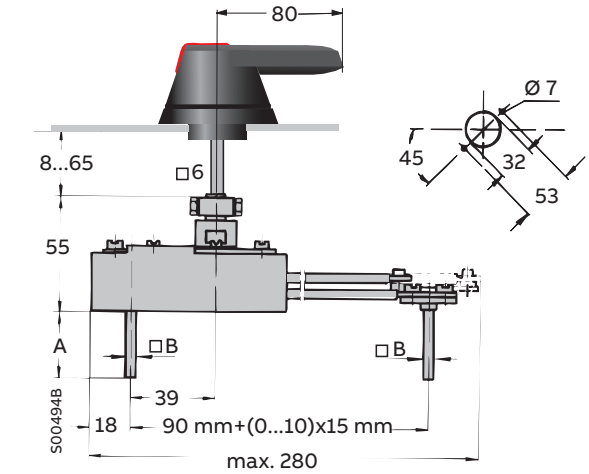

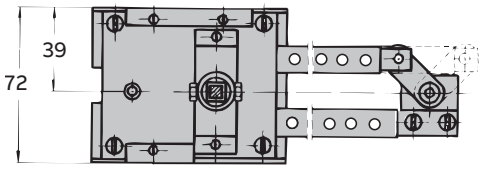

Accessories for manual switch-disconnectors OT16...160

Dimensional drawings for conversion kits

By-pass switches

OTZW17

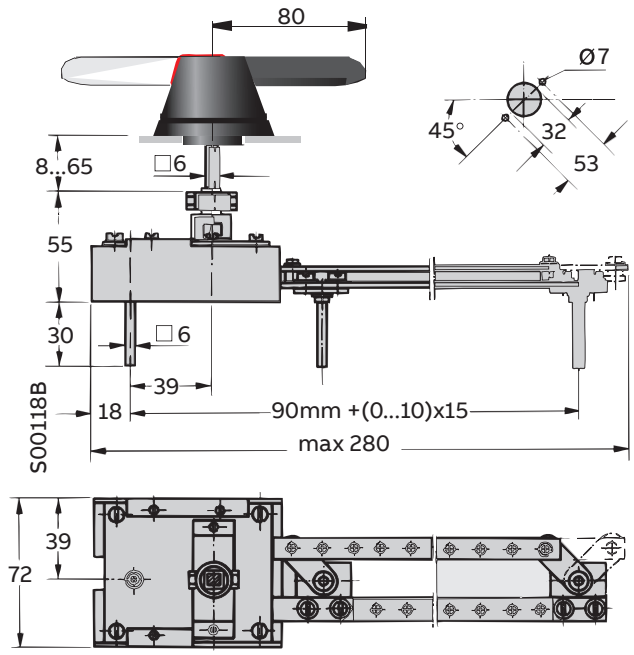

Mechanical interlock

OTZW10, OTZW24

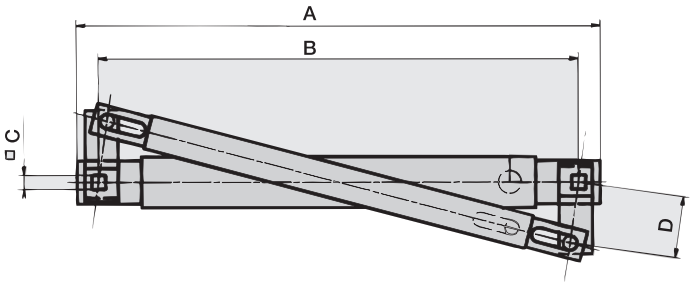

OTZW_

	OTZW10	OTZW24
	mm	mm
A	206	114
B	190	100
C	6	6
D	30	15

S00119A

Main dimensions mm, inches

Accessories for manual switch-disconnectors OT16...160

Ordering information for conversion kit accessories

Shafts and handles for conversion kits

Conversion kit type	Suitable for switches	To be ordered separately		Included in conversion kit delivery		The standard handle / shaft of one of the combined switches can be used	
		Shaft	Handle	Shaft	Handle	Shaft	Handle
6 and 8-pole switches							
OWP6D40	OT16...40	x (shaft dia 6 mm)	OHBS1A_	-	-	-	-
OWP6D80	OT63...80	x (shaft dia 6 mm)	OHBS1A_	-	-	-	-
OWP6D125	OT100...125	x (shaft dia 6 mm)	OHBS1A_	-	-	-	-
OWP6D40	OT16...40	x (shaft dia 6 mm)	OHB45J6	-	-	-	-
OWP6D80	OT63...80	x (shaft dia 6 mm)	OHB45J6	-	-	-	-
OWP6D125	OT100...125	x (shaft dia 6 mm)	OHB45J6	-	-	-	-
OTZW8	OT16...125	x	x	-	-	-	-
OESAZW2	OT160	-	-	x (2 pcs)	OHB145J12	-	-
Change-over switches							
OWC6D40	OT16...40	x (shaft dia 6 mm)	OHBS2AJE011	-	-	-	-
OWC6D80	OT63...80	x (shaft dia 6 mm)	OHBS2AJE011	-	-	-	-
OWC6D125	OT100...125	x (shaft dia 6 mm)	OHBS2AJE011	-	-	-	-
OWC6D40	OT16...40	x (shaft dia 6 mm)	OHB45J6E311	-	-	-	-
OWC6D80	OT63...80	x (shaft dia 6 mm)	OHB45J6E311	-	-	-	-
OWC6D125	OT100...125	x (shaft dia 6 mm)	OHB45J6E311	-	-	-	-
OESAZW1	OT160	-	-	-	-	x	x
By-pass switches							
OTZW17	OT16...160	-	-	x (3 pcs)	OHB80J6E011		
Mechanical interlock							
OTZW24	OT16...160	-	-	-	-	x	x

Accessories for manual switch-disconnectors OT16...160

Ordering information for locking accessories

Locking accessories



SA1

Padlocking adapter

For a padlock with max. 3.5 mm bail.

Suitable for switches	Type	Order code	Weight/ unit kg
OT63...125	SA1	GJF1 101 903 R000	0.01


OHZX4

Door interlock bracket for pistol handles

Prevents defeating the door interlock.

Suitable for switches	Type	Order code	Weight/ unit kg
For pistol handles OH_45...275	OHZX4	1SCA022467R2470	0.03

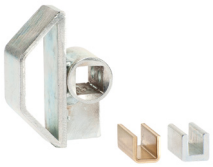
OETLZW16

Cam attachment

Cam attachment for Castell, Lowe & Fletcher and Ronis interlock. Lock, handle or shaft are not included. Mounting on OXP shaft working together with external OH door handle.

Suitable for switches	Type	Order code	Weight/ unit kg
OT16...160	OETLZW16	1SCA022093R2070	0.17



Manual switch-disconnectors OT160...4000
Modular and flexible design

Introduction to manual switch-disconnectors OT160...4000

Product overview	60
Product range	61
Type designation key for the types OT160...4000	62

Technical data

Switch-disconnectors (IEC)	63
Non-fusible disconnect switches (UL/CSA)	65

Ordering information

Accessory guide for OT160EV...1600	68
Accessory guide for OT2000...4000	69
Front operated switch-disconnectors OT160...800 (IEC)	70
Front operated switch-disconnectors OT160...800 with wide phase distance (IEC)	72
Front operated switch-disconnectors OT1000...4000 (IEC)	73
Front operated switch-disconnectors OT1000...4000 with wide phase distance (IEC)	76
Manual 6- and 8-pole switch-disconnectors OT160...800_DP, (IEC)	77
Manual 6- and 8-pole switches OT1000...2500_DDP, (IEC)	78
Side operated switch-disconnectors OT160...4000 (IEC)	79
Front operated earthing switches (IEC)	80
Front operated non-fusible disconnect switches (UL/CSA)	82
Manual 6- and 8-pole switch-disconnectors OT200...600_DP, (UL)	83
Side operated non-fusible disconnect switches (UL/CSA)	84
Front operated non-fusible disconnect switches for up to 1000V AC, (UL)	85

Dimensional drawings

Front operated switch-disconnectors OT160...800 (IEC)	87
Front operated switch-disconnectors OT160...800 with wide phase distance (IEC)	89
Front operated switch-disconnectors OT1000...4000 (IEC)	95
Front operated 6-and 8-pole switch-disconnectors OT160...800E_DP	98
Front operated 6-and 8-pole switch-disconnectors OT1000...2500E_DDP	99
Front operated 6-and 8-pole switch-disconnectors OT1000...2500E_DDP	100
Front operated switch-disconnectors OT1000...4000 (IEC)	101
Side operated switch-disconnectors OT160...4000 (IEC)	104
Front operated earthing switches (IEC)	107
Front operated non-fusible disconnect switches (UL/CSA)	111
Front operated 6-and 8-pole non-fusible disconnect switches OT200...800U_DP	117
Front operated non-fusible disconnect switches (UL/CSA)	119

Ordering information for accessories

Handles	124
Shafts	130
Shaft accessories	132
Auxiliary contacts	133
ON and OFF-functions of main and auxiliary contacts	135
Fourth poles, neutral and earth terminals	136
Terminal shrouds	137
Mounting and locking accessories	138
Terminal clamps	139
Terminal lugs	141
Conversion kits	142
Mechanical interlocks	147
Electrical interlocks	148
ITS2 monitoring unit	149

Manual switch-disconnectors OT160...4000
Modular and flexible design

Manual switch-disconnectors by ABB are suitable for a wide range of demanding applications in power distribution or motor control centers. Their smart and modular design and adaptable construction reduce installation time and make them perfect for even the most demanding operating environments.

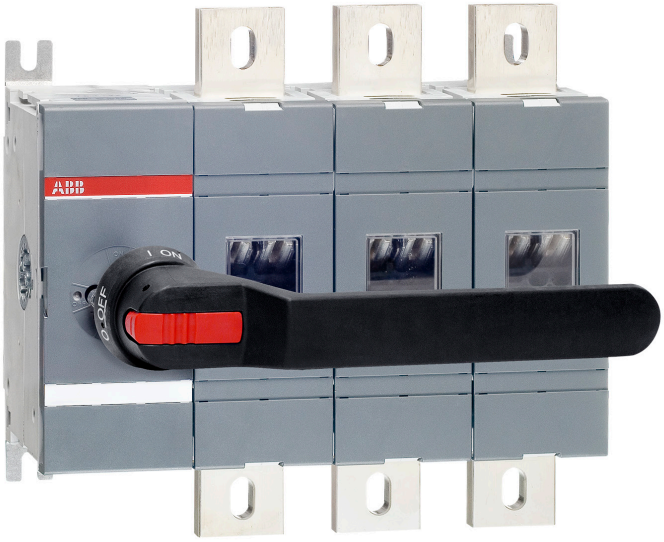

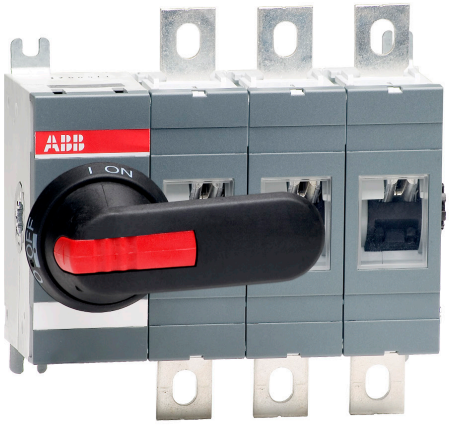

Easy to install

In addition to the same easy installation features as the smaller switch-disconnectors, these devices are extremely flexible regarding installation orientation. They work just as well installed horizontally or vertically, or even on the ceiling. Smart design eliminates the need for major customization such as when using devices optimized for e.g. the 140 mm switchgear busbar standard or 600 mm cubicle solution.

Space saving

All our switches have been designed for easy and cost-efficient installation, maintenance and use. The modular design enables 2-, 3- and 4-pole installation with different position of the switching mechanism to suit your needs and spacial requirements. The devices can be optimized in relation to busbar and cable connections as well as handles and other accessories.

Reliable in extreme conditions

These ABB switch-disconnectors are extremely well suited for heavy duty applications in e.g. distribution centers with full rated current. Relevant short circuit ratings are available for IEC and UL versions alike. These devices are also equipped with extremely resistant insulation materials, which help reduce the risk of flash-over between phases in even the most severe circumstances and environments.

Manual switch-disconnectors OT160...4000

Modular and flexible design



Manual operation						
IEC	OT160EV		OT315E		OT630E
	OT200E		OT400E		OT800E
	OT250E				
UL 98 file # E101914, CSA C2.22 No.4		OT200U		OT400U	OT600U

Switch size		**160 A**	**200 A**	**250 A**	**200 A**	**315 A**	**400 A**	**400 A**	**600 A**	**630 A**	**800 A**
IEC	**I_{th}**	160 A	200 A	250 A		315 A	400 A			630 A	800 A
	I_e /AC22A, 415 V	160 A	200 A	250 A		315 A	400 A			630 A	800 A
	I_e /AC23A, 415 V	160 A	200 A	250 A		315 A	400 A			630 A	800 A
UL/CSA	**Ampere rating**	20 A	30 A	40 A	200 A			400 A	600		

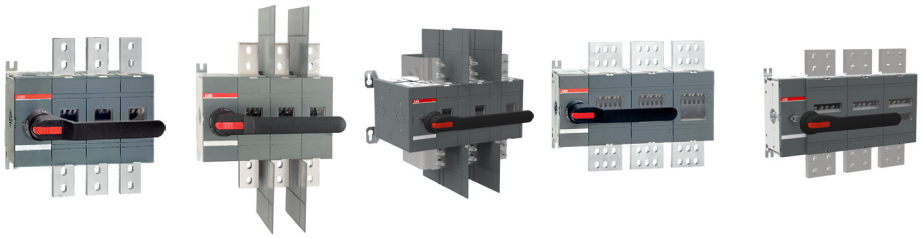

Manual operation					
IEC	OT1000E			OT2000E	OT3200E
	OT1600E			OT2500E	OT4000E
	OT2000EC				
UL 98 file # E101914, CSA C2.22 No.4		OT800U	OT1600U		
		OT1200U	OT2000U		

Switch size		**800 A**	**1000 A**	**1200 A**	**1250 A**	**1600 A**	**2000 A**	**800 A**	**1200 A**	**1600 A**	**2000 A**	**2000 A**	**2500 A**	**3200 A**	**4000 A**
IEC	I_{th}		1000 A		1250 A	1600 A	2000 A					2000 A	2500 A	3200 A	4000 A
	I_e /AC22A, 415 V		1000 A		1250 A	1250 A	2000 A					2000 A	2500 A		
	I_e /AC23A, 415 V		1000 A		1250 A	1250 A									
UL/CSA	Ampere rating	800 A		1200 A				800 A	1200 A	1600 A	2000 A				

Accessories for manual switch-disconnectors OT160...4000 include:

- Handles
- Shafts
- Auxiliary contacts
- Fourth poles
- N terminals
- Terminal shrouds
- Mounting accessories
- Terminal clamps
- Conversion kits
- Locking accessories
- Mechanical interlocks
- Electrical interlocks

Please note that listed accessories are not automatically included in your order.
Ordering information for accessories from page 121-124, 127-130, 133-139 and 142-145.

Manual switch-disconnectors OT160...4000

Type key

Understanding the type code keys below will help you quickly identify the correct product for your needs.

ABB Brand
Manual switch-disconnectors

Switch size
The second letter in the code indicates the ampere rating [A] of the product: 160...4000 A

OT 400 E 03 W P

Construction 2	
P	External handle and metal shaft included
K	With direct mount handle

Construction 1	
W	With wide phase distance

Operation/Mounting/Certification	
E EV	Front operated, base mounting, IEC
U	Front operated, base mounting, UL/CSA
ES EVS	Side operated, base mounting, IEC
EM	Earthing switches, bottom mounted, IEC. The mechanism is turned 90 degrees for space saving
EP	Earthing switches, base mounted, IEC

Number of poles and placing of the operating mechanism	
03	3-poles, operating mechanism at the left end of the switch
04	4-poles, operating mechanism at the left end of the switch
12	3-poles, operating mechanism between the poles
22	4-poles, operating mechanism between the poles
30	3-poles, operating mechanism at the right end of the switch
40	4-poles, operating mechanism at the right end of the switch

Pole configuration table

The various placing options of the operating mechanism in relation to the 3 or 4 poles is illustrated below. The operating mechanism may be placed at the end of the switch or between poles.

Front operated
Configuration 03, 04:

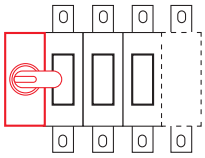

Front operated
Configuration 12, 22:

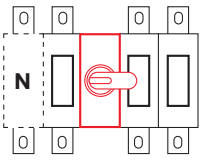

Front operated
Configuration 30, 40:

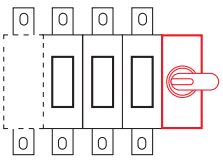

Side operated
Configuration 03, 04:

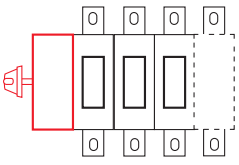

Manual switch-disconnectors OT160...4000, IEC

Technical data

Technical data according to IEC 60947-3

Switch type			OT160EV	OT200E	OT250E	OT315E	OT400E	OT630E	OT800E
Rated insulation voltage and rated operational voltage AC-20, DC-20	Pollution degree 3		1 000 V	1 000 V	1 000 V	1 000 V	V 1 000	1 000 V	1 000 V
Dielectric strength		50 Hz 1 min.	10 kV	10 kV	10 kV	10 kV	10 kV	10 kV	10 kV
Rated impulse withstand voltage			12 kV	12 kV	12 kV	12 kV	12 kV	12 kV	12 kV
Rated thermal current and rated operational current AC-20, DC-20	In open air		200 A	200 A	250 A	315 A	400 A	630 A	800 A
in ambient 40 °C [4]	In enclosure		160 A	200 A	250 A	315 A	400 A	630 A	800 A
...with minimum cable cross section		Cu	70 mm²	95 mm²	120 mm²	185 mm²	240 mm²	2x185 mm²	2x240 mm²
		≤ 500 V	200 A	200 A	250 A	315 A	400 A	630 A	800 A
		690 V	160 A	200 A	250 A	315 A	400 A	630 A	800 A
Rated operational current, AC-21A		1000 V	160 A	200 A	250 A	315 A	400 A	630 A	800 A
		≤ 500 V	200 A	200 A	250 A	315 A	400 A	630 A	800 A
		690 V	160 A	200 A	250 A	315 A	400 A	630 A	800 A
Rated operational current, AC-22A		1000 V	160 A	200 A	250 A	315 A	400 A	630 A	800 A
		≤ 500 V	160 A	200 A	250 A	315 A	400 A	630 A	800 A
		690 V	160 A	200 A	250 A	315 A	400 A	630 A	800 A
Rated operational current, AC-23A		1000 V	135 A	135 A	135 A	200 A	200 A	400 A	400 A
		24...110 V	160 A/2	200 A/2	250 A/2	315 A/1 [2]	400 A/1 [2]	630 A/1	800 A/1
		220 V	160 A/2	200 A/2	250 A/2	315 A/2 [2]	400 A/2 [2]	630 A/1	800 A/1
Rated operational current / poles in series, DC-21A [1]		440 V	160 A/3	200 A/3	250 A/3	315 A/3	360 A/3	630 A/2	800 A/2
		660 V	160 A/4	200 A/4	230 A/4 [2]	315 A/4	360 A/4	630 A/4 [2]	650 A/4 [2]
Rated operational current / poles in series, DC-21B		800 V	160 A/5	200 A/5	250 A/5	315 A/5	400 A/5	600 A/5	600 A/5
		1000 V	160 A/6	200 A/6	250 A/6	315 A/6	400 A/6	600 A/6	600 A/6
		230 V	48 kW	60 kW	75 kW	100 kW	132 kW	200 kW	250 kW
		400 V	80 kW	110 kW	140 kW	160 kW	220 kW	355 kW	450 kW
		415 V	88 kW	110 kW	145 kW	180 kW	230 kW	355 kW	450 kW
		500 V	112 kW	132 kW	170 kW	220 kW	280 kW	400 kW	560 kW
Rated operational power, AC-23 [3]		690 V	144 kW	200 kW	250 kW	315 kW	400 kW	630 kW	800 kW
Rated breaking capacity in category AC-23		≤ 500 V	1 280 A	1 600 A	2 000 A	2 520 A	3 200 A	5 040 A	6 400 A
		690 V	1 280 A	1 600 A	2 000 A	2 520 A	3 200 A	5 040 A	6 400 A
Rated conditional short-circuit current I_q(r.m.s.) and corresponding max. allowed cut-off current $\hat{I}_c$. The cut-off current $\hat{I}_c$. refers to values listed by fuse manufacturers (single phase test acc. to IEC60269)	Iq 100kA, 500V	$\hat{I}_c$	40.5 kA	40.5 kA	40.5 kA	61.5 kA	61.5 kA	90 kA	90 kA
	Max. OFA_fuse size	gG/aM	315 A/315 A	315 A/315 A	315 A/315 A	500 A/450 A	500 A/450 A	800 A/1 000 A	800 A/1 000 A
	Iq 80kA, 690V	$\hat{I}_c$	40.5 kA	40.5 kA	40.5 kA	59 kA	59 kA	83.5 kA	83.5 kA
	Max. OFA_fuse size	gG/aM	355 A/315 A	355 A/315 A	355 A/315 A	500 A/500 A	500 A/500 A	800 A/1 000 A	800 A/1 000 A
	Iq 100kA, 690V Max. fuse size	gG/aM	250A/250A	250A/250A	250A/250A	-/400A	-/400A	-/630A	-/630A
Rated short-time withstand current	r.m.s. value I_{cw}	≤ 1000 V 0.15 s	15 kA	15 kA	15 kA	31 kA	31 kA	38 kA	38 kA
		≤ 1000 V 0.25 s	15 kA	15 kA	15 kA	24 kA	24 kA	36 kA	36 kA
		≤ 1000 V 1 s	8 kA	8 kA	8 kA	15 kA	15 kA	20 kA	20 kA
Rated short-circuit making capacity	Peak value I_{cm}	≤ 1000 V	30 kA	30 kA	30 kA	65 kA	65 kA	80 kA	80 kA
Rated capacitor power when no initial charge on the capacitor	The capacitor ratings are limited by the fuse links	415 V	80 kVAr	100 kVAr	115 kVAr	145 kVAr	180 kVAr	250 kVAr	310 kVAr
		500 V	96 kVAr	120 kVAr	135 kVAr	175 kVAr	215 kVAr	300 kVAr	375 kVAr
		690 V	128 kVAr	160 kVAr	190 kVAr	250 kVAr	325 kVAr	450 kVAr	550 kVAr
Power loss / pole	With rated current		3.2 W	4 W	6.5 W	6.5 W	10 W	25 W	40 W
Mechanical endurance	Divide by two for oper. cycles		20 000 Oper.	20 000 Oper.	20 000 Oper.	16 000 Oper.	16 000 Oper.	10 000 Oper.	10 000 Oper.
Weight without accessories	3-pole switch		1.3 kg	1.3 kg	1.3 kg	2.8 kg	2.8 kg	6.1 kg	6.1 kg
Terminal bolt size	Metric thread diameter x length		M8x25 mm	M8x25 mm	M8x25 mm	M10x30 mm	M10x30 mm	M12x40 mm	M12x40 mm
Terminal tightening torque	Counter torque required		15-22 Nm	15-22 Nm	15-22 Nm	30-44 Nm	30-44 Nm	50-75 Nm	50-75 Nm
Operating torque	3-pole switch disconnector		7 Nm	7 Nm	7 Nm	16 Nm	16 Nm	27 Nm	27 Nm

[1] Further ratings on request.
[2] Category B.
[3] These values are given for guidance and may vary acc. to the motor manufacturer.
[4] Acc. to IEC 60947-1, § 6.1.1.

Manual switch-disconnectors OT160...4000, IEC

Technical data

Technical data according to IEC 60947-3

Switch type			OT1000E	OT1250E	OT1600E	OT2000EC	OT2000E	OT2500E	OT3200E	OT4000E
Rated insulation voltage and rated operational voltage AC20/DC20	Pollution degree 3		1 000 V	1 000 V	1 000 V	1 000 V	1 000 V	1 000 V	1 000 V	1 000 V
Dielectric strength		50 Hz 1 min.	10 kV	10 kV	10 kV	10 kV	10 kV	10 kV	10 kV	10 kV
Rated impulse withstand voltage			12 kV	12 kV	12 kV	12 kV	12 kV	12 kV	12 kV	12 kV
Rated thermal current and rated operational current AC20/DC20	Ambient 40 °C [1]	In open air	1 000 A	1 250 A	1 600 A	2 000 A	2 000 A	2 500 A	3 200 A	3 800 A, 4000 A [5]
	Ambient 40 °C [1]	In enclosure	1 000 A	1 250 A	1 600 A	–	–	–	–	–
..with minimum conductor cross section	Cu		2x300 mm²	2x400 mm²	2x500 mm²	3x500 mm²	3x500 mm²	4x500 mm²	4x1 000 mm²	5x1 000 mm²
Rated operational current, AC-21A		up to 690 V	1 000 A	1 250 A	1 600 A	–	2 000 A [2]	2 500 A [2]	–	–
		1000 V	1 000 A	1 250 A	1 600 A	–	–	–	–	–
Rated operational current, AC-22A		up to 415 V	1 000 A	1 250 A	1 600 A	2 000 A [2]	2 000 A [2]	2 500 A [2]	3 200 A [2]	3 800 A [2], 4000 A [2] [5]
		500 - 690 V	1 000 A	1 250 A	1 600 A	–	2 000 A [2] [3]	2 500 A [2] [3]	–	–
Rated operational current, AC-23A		up to 500 V	1 000 A	1 250 A	1 250 A	–	–	–	–	–
		690 V	1 000 A	1 250 A	1 250 A	–	–	–	–	–
Rated operational power, AC-23A (These values are given for guidance and may vary acc. to the motor manufacturer)		400...415 V	560 kW	710 kW	710 kW	–	–	–	–	–
		440 V	630 kW	800 kW	800 kW	–	–	–	–	–
		500 V	710 kW	900 kW	900 kW	–	–	–	–	–
		690 V	1 000 kW	1 200 kW	1 200 kW	–	–	–	–	–
Rated breaking capacity, AC-23A		up to 500 V	10 000 A	10 000 A	10 000 A	–	–	–	–	–
		690 V	10 000 A	10 000 A	10 000 A	–	–	–	–	–
Rated conditional short-circuit current I_q (r.m.s.) and corresponding max. allowed cut-off current $\hat{I}_c$. The cut-off current $\hat{I}_c$ refers to values listed by fuse manufacturers (single phase test acc. to IEC60269).	Iq 80kA, ≤415V Max. OFA_fuse size	$\hat{I}_c$	100 kA	100 kA	100 kA	100 kA	–	–	–	–
		gG/aM	1 250 A/ 1 250 A	1 250 A/ 1 250 A	1 250 A/ 1 250 A	1 250 A/ 1 250 A	1 250 A/ 1 250 A	–	–	–
	Iq 100kA, 500V Max. OFA_fuse size	$\hat{I}_c$	106 kA	106 kA	106 kA	–	–	–	–	–
		gG/aM	1 250 A/ 1 250 A	1 250 A/ 1 250 A	1 250 A/ 1 250 A	–	1 250 A/ 1 250 A	–	–	–
Rated short-time withstand current	r.m.s. -value I_{cw}	690 V, 0.25 s	50 kA	50 kA	50 kA	50 kA	80 kA	80 kA	80 kA	80 kA, 100 kA [5]
		690 V, 1 s	50 kA	50 kA	50 kA	50 kA	55 kA	55 kA	65 kA	80 kA
Rated short circuit making capacity	Peak value I_{cm}	690 V	110 kA [4]	110 kA [4]	110 kA [4]	110 kA [4]	176 kA	176 kA	176 kA	176 kA, 220 kA [5]
	Max. distance from switch frame to nearest busbar/ cable support		150 mm	150 mm	150 mm	150 mm	150 mm	150 mm	150 mm	150 mm
Rated capacitor power when no initial charge on the capacitor	The capacitor ratings are limited by the fuse links	415 V	460 kVAr	575 kVAr	575 kVAr	575 kVAr	–	–	–	–
		500 V	550 kVAr	690 kVAr	690 kVAr	690 kVAr	–	–	–	–
		690 V	750 kVAr	950 kVAr	950 kVAr	950 kVAr	–	–	–	–
Power loss/pole	At rated operational current		19 W	29 W	48 W	48 W	55 W	85 W	95 W	130 W
Mechanical endurance	Divide by two for operation cycles		6 000 Oper.	6 000 Oper.	6 000 Oper.	6 000 Oper.	6 000 Oper.	6 000 Oper.	5 000 Oper.	5 000 Oper.
Weight without accessories	3-pole		14.7 kg	14.7 kg	16.8 kg	16.8 kg	24.9 kg	24.9 kg	31.8 kg	36.2 kg
	4-pole		18.8 kg	18.8 kg	21.6 kg	21.6 kg	32.4 kg	32.4 kg	41.5 kg	47.5 kg
Terminal bolt size	Metric thread diameter x length		M12x50 mm	M12x50 mm	M12x60 mm	M12x60 mm	M12x60 mm	M12x60 mm	M12x60 mm	M12x60 mm
Terminal tightening torque	Counter torque required		50...75 Nm	50...75 Nm	50...75 Nm	50...75 Nm	50...75 Nm	50...75 Nm	50...75 Nm	50...75 Nm
Operating torque	3-pole switch-disconnector		65 Nm	65 Nm	65 Nm	65 Nm	65 Nm	65 Nm	65 Nm	65 Nm

[1] Acc. to IEC60947-1, § 6.1.1.
[2] IEC 947-3, utilization category B, infrequent operation.
[3] Phase barriers or terminal shrouds must be used on both sides of the switch at voltages ≥ 500 V.
[4] The value is 92 kA for 4-pole switch-disconnectors.
[5] OT4000E_W8

Manual switch-disconnectors OT200...1200, UL

Technical data for non-fusible disconnect switches

Switch type			OT200U	OT400U	OT600U	OT800U	OT1200U
		Approval	$_{c}UL_{us}$ Listed	$_{c}UL_{us}$ Listed	$_{c}UL_{us}$ Listed	$_{c}UL_{us}$ Listed	$_{c}UL_{us}$ Listed
		File #	E101914 IEC	E101914 IEC	E101914 IEC	E101914 IEC	E101914 IEC
		Compliance	UL98 CSA C22.2 No.4	UL98 CSA C22.2 No.4	UL98 CSA C22.2 No.4	UL98 CSA C22.2 No.4	UL98 CSA C22.2 No.4
Technical data according to UL/CSA AC Ratings							
General purpose amp rating	pf= 0.7...0.8	-40° to 40 °C	200 A	400 A	600 A	800 A	1 200 A
Max. operating voltage			600 V	600 V	600 V	600 V	600 V
Max. horsepower rating / max. motor FLA current	pf= 0.4...0.5	240 V	75 HP/192.0 A	125 HP/312.0 A	200 HP/480 A	200 HP/602 A	–
	Three phase	480 V	150 HP/180.0 A	250 HP/302.0 A	450 HP/515.0 A	500 HP/590 A	–
		600 V	200 HP/192.0 A	350 HP/336.0 A	500 HP/472.0 A	500 HP/472 A	–
Short circuit rating with fuse	Fuse type	J	200 kA 100 kA	100 kA	– 100 kA	–	–
		T	– 100 kA	–	– 100 kA	–	–
	Fuse type	RK5	– –	–	100 kA –	–	–
		L	– –	–	– 100 kA	100 kA	100 kA
Maximum fuse size			200 A 350 A	600 A	600 A 800 A	800 A	1 200 A
Current rating		at 250 V DC	200 A	400 A	600 A	–	–
		at 600 V DC	100 A	200 A	200 A	–	–
DC horsepower rating for 4-pole switch		at 600 V DC	50 HP	50 HP	-	–	–
DC horsepower rating for 2-pole switch		at 125 V DC	20 HP	-	-	–	–
		at 250 V DC	40 HP	50 HP	50 HP	–	–
DC short circuit rating for 4-pole switch		with circuit breaker	10 kA	10 kA	10 kA	–	–
DC short circuit rating for 2-pole switch		with circuit breaker at 250 V DC	14 kA	14 kA	18 kA	–	–
		with circuit breaker at 600 V DC	10 kA	10 kA	10 kA	–	–
		with class J fuse at 250 V DC	100 kA	100 kA	100 kA	–	–
		... with fuse size	200 A	400 A	600 A	–	–
Min. electrical endurance, pf. 0.75...0.8 Mechanical endurance		oper. cycles	6 000	1 000	1 000	500	500
		Divide by two for operation cycles	20 000 Oper.	16 000 Oper.	10 000 Oper.	6 000 Oper.	6 000 Oper.
Terminal lug kits (optional) Wire range		75 °C wire	OZXA-200	OZXA-400	OZXA-800	OZXA-800/1200	OZXA-1200
			4-300MCM AWG	2-600MCM AWG	2 x 2-600MCM AWG	4 x 2-600MCM AWG	4 x 2-600MCM AWG
Torque		Wire tightening	200 lb.in/22.6 Nm	375 lb.in/42.4 Nm	500 lb.in/56.5 Nm	500 lb.in/56.5 Nm	500 lb.in/56.5 Nm
		Lug mounting	72 lb.in/8.1 Nm	240 lb.in/27.1 Nm	480 lb.in/54.2 Nm	443 lb.in/50.1 Nm	443 lb.in/50.1 Nm
Minimum enclosure dimensions at rated current		Height x Width x Depth	508x407x178 mm 20.3x16.3x7.1 in	600x350x200 mm 24x14x8 in	600x700x300 mm 24x28x12 in	1220x610x305 mm 48.8x24.4x12.2 in	700x900x400 mm 28x36x16 in
Technical data according to IEC 60947							
Rated insulation voltage and rated operational voltage AC20/DC20	Pollution degree 3		1 000 V	1 000 V	1 000 V	1 000 V	1 000 V
Dielectric strength	50 Hz, 1 min.		10 kV	10 kV	10 kV	10 kV	10 kV
Rated impulse withstand voltage			12 kV	12 kV	12 kV	12 kV	12 kV
Rated operational current, AC-22A		up to 415 V	250 A	400 A	800 A	1 600 A	1 600 A
		440...500 V	250 A	400 A	800 A	1 600 A	1 600 A
		690 V	250 A	400 A	800 A	1 600 A	1 600 A
Rated operational current, AC-23A		up to 415 V	250 A	400 A	800 A	1 250 A	1 250 A
		440 V	250 A	400 A	800 A	1 250 A	1 250 A
		500 V	250 A	400 A	800 A	1 250 A	1 250 A
		690 V	250 A	400 A	800 A	1 250 A	1 250 A
Rated conditional short-circuit current I_q (r.m.s.) and corresponding max. allowed cut-off current $\hat{I}_c$. The cut-off current $\hat{I}_c$ refers to values listed by fuse manufacturers (single phase test acc. to IEC60269)	Iq 50kA, 690V	$\hat{I}_c$	35 kA	50.5 kA	71.5 kA	–	–
	Max. OFA_fuse size	gG/aM	355 A/315 A	500 A/500 A	800 A/1 000 A	–	–
	Iq 80kA, 690V	$\hat{I}_c$	40.5 kA	59 kA	83.5 kA	–	–
	Max. OFA_fuse size	gG/aM	355 A/315 A	500 A/500 A	800 A/1 000 A	–	–
Rated short-time withstand current	r.m.s. -value I_{cw}	690 V, 1 s	8 kA	15 kA	20 kA	50 kA	50 kA
Rated short circuit making capacity	Peak value I_{cm}	500/690 V	30 kA	65 kA	80 kA	110 kA [1]	110 kA [1]
Max. distance from switch to nearest bus bar / cable support mm			–	–	–	150 mm	150 mm
Power loss / pole	At rated operational current		6.5 W	10 W	40 W	29 W	48 W
Weight without accessories		3-pole	1.5 kg/3.31 lb	3.0 kg/6.61 lb	6.3 kg/13.89 lb	17.2 kg/37.92 lb	17.2 kg/37.92 lb
		4-pole	1.9 kg/4.16 lb	3.5 kg/7.72 lb	8.0 kg/17.64 lb	72.2 kg/48.94 lb	72.2 kg/48.94 lb
Terminal bolt size	Metric thread diameter x length		M8x25 mm	M10x30 mm	M12x40 mm	M12x50 mm	M12x60 mm

[1] The value is 92 kA for 4-pole switch disconnector.

Manual switch-disconnectors OT1600...2000, UL

Technical data for non fusible disconnect switches

Technical data according to UL/CSAt

Switch type		**OT1600U**	**OT2000U**
	Approval	$_{c}$UL$_{US}$ Listed	$_{c}$UL$_{US}$ Listed
	File #	E101914	E101914
	Compliance	UL98	UL98
		CSA C22.2 No.4	CSA C22.2 No.4
General Use AC ratings -40 to +40 °C	pf=0.7...0.8 Single and three phase	1 600 A	2 000 A
Voltage rating		600 V	600 V
Maximum General Use DC Ratings	250 V DC	1 600	2 000
Short circuit rating with fuse	Fuse type L	100 kA	100 kA
Maximum fuse size		2 000 A	2 000 A
Minimum electrical endurance pf. 0.75...0.8		500 Oper.cycles	500 Oper.cycles
Mechanical endurance	Divide by two for operation cycles	2 500 Oper.	2 500 Oper.
Gross/ net weight without handle, shaft and accessories	2-pole switch	37/34 kg - 81.6/75 lb	37/34 kg - 81.6/75 lb
	3-pole switch	52/49 kg - 114.6/108 lb	52/49 kg - 114.6/108 lb
	4-pole switch	69/65 kg- 152.1/143.3 lb	69/65 kg - 152.1/143.3 lb
Standard shaft and mounting depth	Square dimension x length of shaft	12x185 mm/ 0.47x7.3 in	12x185 mm/ 0.47x7.3 in
	Corresponding mounting depth	358-444 mm/ 13.6-16.8 in	358-444 mm/ 13.6-16.8 in
Standard handle		OHB 274J12 Type	OHB 274J12 Type
Terminal bolt size	Metric thread diameter x length	M12x60 mm (included)	M12x60 mm (included)
Terminal bolt tightening torque	Counter torque required	50 Nm / 443 lb.in	50 Nm / 443 lb.in
Terminal lug kits (optional)	75 °C wire	2x OZXA-1200 Qty / phase	2x OZXA-1200 Qty / phase
		2x 4x2-600MCM Wire range	2x 4x2-600MCM Wire range
Torque	Wire tightening	56 Nm / 500 lb.in	56 Nm/ 500 lb.in
	Lug mounting	50 Nm/ 443 lb.in	50 Nm/ 443 lb.in
Minimum enclosure dimensions	Height x Width x Depth	1 000x800x450 mm	1 000x800x450 mm
		39.4x31.5x17.7 in	39.4x31.5x17.7 in

Manual switch-disconnectors for 800...1000 V AC applications

Switch type				OT400U -1000	OT600U -1000	OT800U -1000	OT1200U -800
		Approval		UL Recognized	$_{c}$UL$_{US}$ Listed	$_{c}$UL$_{US}$ Listed	$_{c}$UL$_{US}$ Listed
		File #		File E101914	File E101914	File E101914	File E101914
		Compliance		UL98	UL98	UL98	UL98
Technical data according to UL/CSA AC Ratings							
General purpose amp rating	-40° to 40 °C		800 V AC	300 A	400 A	600 A	800 A
			1000 V AC	200 A	400 A	600 A	-
Max. Operating voltage				1000 V	1000 V	1000 V	800 V
Short circuit rating	Fuse type and size						
	Fuse type and size	NH3 170M7402 (800V AC, UR approved)	400A	50 kA	50 kA	-	-
	Any circuit breaker or fuse	(800V AC)		22 kA	30 kA	35 kA	35 kA
	Any circuit breaker or fuse	(1000V AC)		22 kA	30 kA	35 kA	-
Min. electrical endurance, pf. 0.75...0.8		oper. cycles		1 000	1 000	1 000	500
Mechanical endurance		Divide by two for operation cycles		16 000 Oper.	10 000 Oper.	8 000 Oper.	6 000 Oper.
Terminal lug kits (optional)		75 °C wire	-	OZXA-400	OZXA-26	OZXA-800	OZXA-800
Wire range			-	2-600MCM AWG	1x2-600MCM AWG	2x2-600MCM AWG	2x2-600MCM AWG
			-	-	-	-	OZXA-1200
			-	-	-	-	4x2-600MCM AWG
Torque		Wire tightening		375 lb.in/42.4 Nm	450 lb.in/56.5 Nm	500 lb.in/56.5 Nm	500 lb.in/56.5 Nm
		Lug mounting		340 lb.in/27.1 Nm	228 lb.in/54.2 Nm		480 lb.in/54.2 Nm
Minimum enclosure dimensions at rated current		Height x Width x Depth		600x350x200 mm	600x700x200 mm	800x600x330 mm	800x600x330 mm
				24x14x8 in	24x28x8 in	32x24x13.2 in	32x24x13.2 in



Manual switch-disconnectors OT160...4000

Ordering information

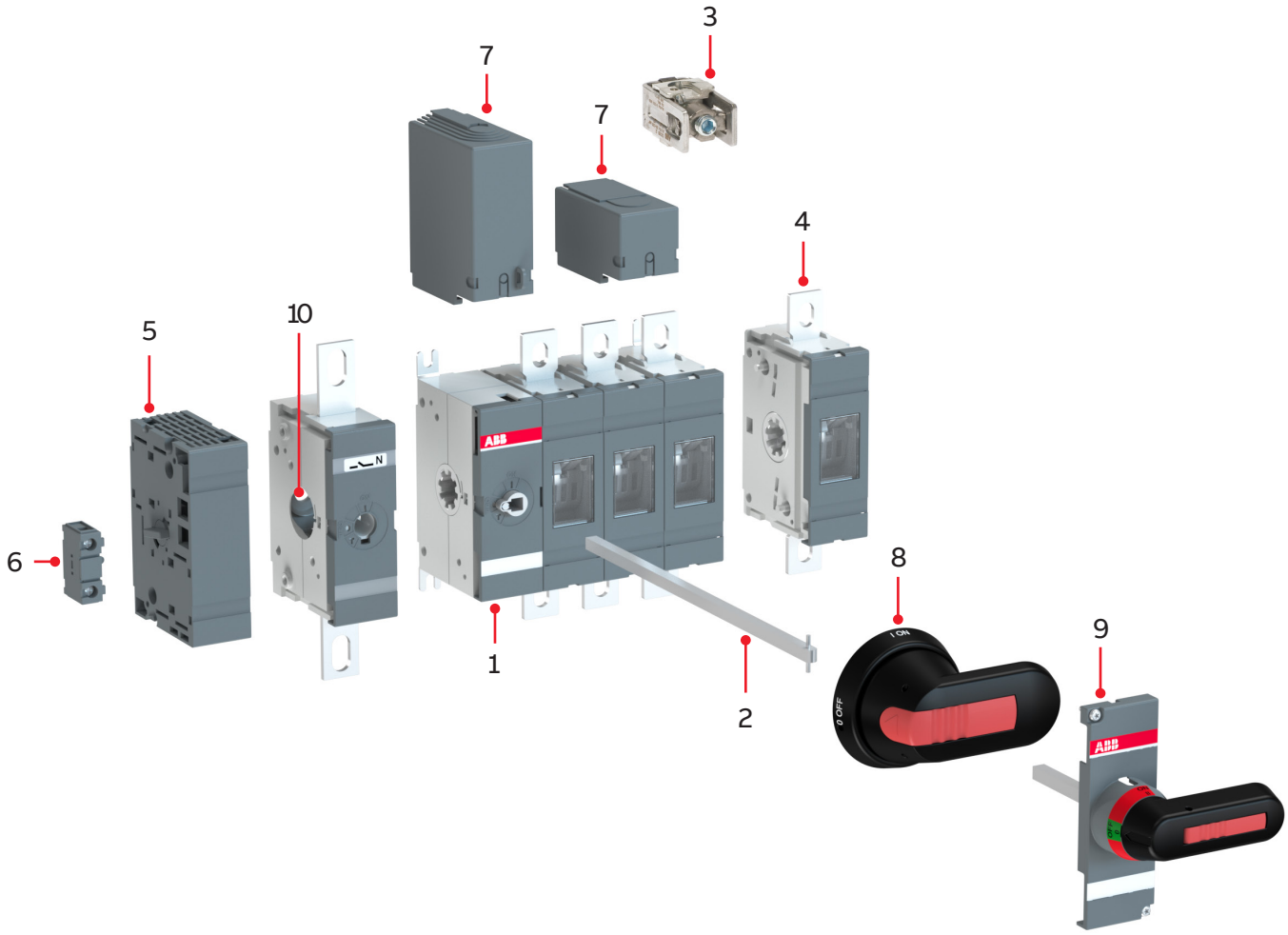

Accessory guide for OT160EV...1600

1. Switch-disconnector
2. Extended shaft
3. Terminal clamp
4. Fourth pole
5. Module for auxiliary contact
6. Auxiliary contact
7. Terminal shroud
8. Pistol handle
9. Direct mounting handle
10. Detachable neutral link

Please note that listed accessories are not automatically included in your order.

Manual switch-disconnectors OT160...4000

Ordering information

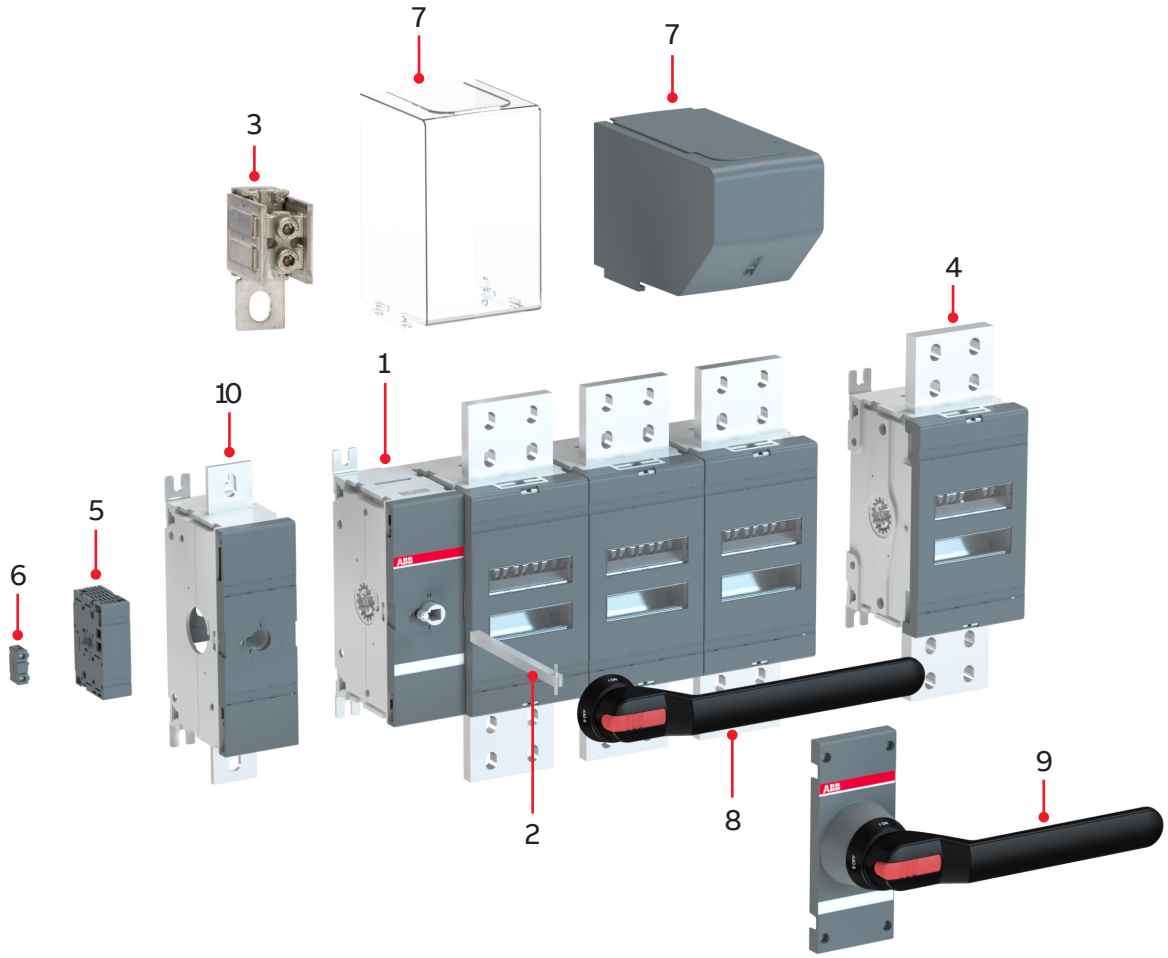

Accessory guide for OT2000...4000

1. Switch-disconnector
2. Extended shaft
3. Terminal clamp
4. Fourth pole
5. Module for auxiliary contact
6. Auxiliary contact
7. Terminal shroud
8. Pistol handle
9. Direct mounting handle
10. Detachable neutral link

Please note that listed accessories are not automatically included in your order.

Manual switch-disconnectors OT160...4000, IEC

Ordering information



OT315...400E03P



OT630...800E03P

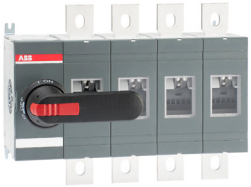

OT630...800E04P



OT630...800E12P



OT630...800E22P

Front operated switch-disconnectors OT160...800, base mounting, IEC

Including a black ON-OFF plastic pistol handle and shaft as standard. The handle is IP65 protected, padlockable in the OFF-position. The door is interlocked when the handle is in ON-position and in OFF-position when the handle is padlocked. The shaft can be adjusted to different installation depths, see mounting depths in page 127.

Number of poles	Open air thermal current I_{th}	Rated operat. currents AC22A/AC23A 400...415 V	Type	Order code	Weight/ unit
	A	A/A			kg
3	200	200/160	OT160EV03P	1SCA120514R1001	1.6
4	200	200/160	OT160EV04P	1SCA120521R1001	2.0
3	200	200/160	OT160EV12P	1SCA120529R1001	1.6
4	200	200/160	OT160EV22P	1SCA120537R1001	2.0
3	200	200/200	OT200E03P	1SCA022712R0800	1.6
4	200	200/200	OT200E04P	1SCA022713R4930	2.0
3	200	200/200	OT200E12P	1SCA022721R3990	1.6
4	200	200/200	OT200E22P	1SCA022721R4020	2.0
3	250	250/250	OT250E03P	1SCA022710R0100	1.6
4	250	250/250	OT250E04P	1SCA022710R0520	2.0
3	250	250/250	OT250E12P	1SCA022721R4110	1.6
4	250	250/250	OT250E22P	1SCA022721R4290	2.0
3	315	315/315	OT315E03P	1SCA022718R8510	3.1
4	315	315/315	OT315E04P	1SCA022719R1730	3.7
3	315	315/315	OT315E12P	1SCA022727R4190	3.1
4	315	315/315	OT315E22P	1SCA022727R4270	3.7
3	400	400/400	OT400E03P	1SCA022718R8780	3.1
4	400	400/400	OT400E04P	1SCA022719R1810	3.7
3	400	400/400	OT400E12P	1SCA022727R5750	3.1
4	400	400/400	OT400E22P	1SCA022727R5830	3.7
3	630	630/630	OT630E03P	1SCA022718R8940	6.3
3+N [1]	630	630/630	OT630E03N3P	1SCA022779R4860	6.7
4	630	630/630	OT630E04P	1SCA022719R2030	7.5
3	630	630/630	OT630E12P	1SCA022753R4790	6.3
4	630	630/630	OT630E22P	1SCA022753R4870	7.5
3	800	800/800	OT800E03P	1SCA022718R9410	6.3
3+N [1]	800	800/800	OT800E03N3P	1SCA022779R4780	6.7
4	800	800/800	OT800E04P	1SCA022719R2110	7.5
3	800	800/800	OT800E12P	1SCA022753R5170	6.3
4	800	800/800	OT800E22P	1SCA022753R5250	7.5

[1] Include a detachable neutral link integrated into the mechanism.

Shafts, pistol handles and terminal bolt kits included as standard

Suitable for switches	Shaft	Handle	Terminal bolt kit
OT160EV...250_P	OXP6X210	OHB65J6	M8x25
OT315...400_P	OXP12X185	OHB95J12	M10x30
OT630...800_P	OXP12X185	OHB125J12	M12x40

Manual switch-disconnectors OT160...4000, IEC

Ordering information



OT160EV03K
OT200...250E03K



OT315...400E03K



OT630...800E03K



OT630...800E04K

Front operated switch-disconnectors OT160...800, base mounting, IEC

Including a black Test-OFF-ON plastic direct mount handle and shaft as standard.
The handle is padlockable in the OFF-position.

Number of poles	Open air thermal current I_{th} A	Rated operat. currents AC22A/AC23A 400...415 V A/A	Type	Order code	Weight/ unit kg
3	200	200/160	OT160EV03K	1SCA120513R1001	1.5
4	200	200/160	OT160EV04K	1SCA120520R1001	1.9
3	200	200/200	OT200E03K	1SCA022763R4820	1.5
4	200	200/200	OT200E04K	1SCA022763R4910	1.9
3	250	250/250	OT250E03K	1SCA022763R5040	1.5
4	250	250/250	OT250E04K	1SCA022763R5210	1.9
3	315	315/315	OT315E03K	1SCA022763R5630	2.9
4	315	315/315	OT315E04K	1SCA022763R5710	3.5
3	400	400/400	OT400E03K	1SCA022763R5390	2.9
4	400	400/400	OT400E04K	1SCA022763R5550	3.5
3	630	630/630	OT630E03K	1SCA022779R4940	6.3
4	630	630/630	OT630E04K	1SCA022779R5080	7.5
3	800	800/800	OT800E03K	1SCA022779R5160	6.3
4	800	800/800	OT800E04K	1SCA022779R5240	7.5

Direct mount handles and terminal bolt kits included as standard

Suitable for switches	Handle	Terminal bolt kit
OT160EV...250_K	OTV250EK	M8x25
OT315...400_K	OTV400EK	M10x30
OT630...800_K	OTV800EK	M12x40

Manual switch-disconnectors OT160...4000, IEC

Ordering information



OT160EV04WP
OT200...250E04WP



OT160EV22WP
OT200...250E22WP

Front operated switch-disconnectors OT160...800 with wide phase distance, base mounting, IEC

The phase barriers are mounted as standard. Including a black ON-OFF plastic handle and shaft as standard. The handle is IP65 protected, padlockable in the OFF-position. The door is interlocked when the handle is in ON-position and in OFF-position when the handle is padlocked. The shaft can be adjusted to different installation depths, see mounting depths in page 127.

Number of poles	Open air thermal current I_{th} A	Rated operat. currents AC22A/AC23A 400...415 V A/A	Type	Order code	Weight/ unit kg
3	200	200/160	OT160EV03WP	1SCA120517R1001	1.8
4	200	200/160	OT160EV04WP	1SCA120523R1001	2.2
3	200	200/160	OT160EV12WP	1SCA120606R1001	1.8
4	200	200/160	OT160EV22WP	1SCA120539R1001	2.2
3	200	200/200	OT200E03WP	1SCA022744R2670	1.8
4	200	200/200	OT200E04WP	1SCA022744R3130	2.2
3	200	200/200	OT200E12WP	1SCA022744R2910	1.8
4	200	200/200	OT200E22WP	1SCA022744R3300	2.2
3	250	250/250	OT250E03WP	1SCA022744R3560	1.8
4	250	250/250	OT250E04WP	1SCA022744R3810	2.2
3	250	250/250	OT250E12WP	1SCA022745R0000	1.8
4	250	250/250	OT250E22WP	1SCA022745R0180	2.2
3	315	315/315	OT315E03WP	1SCA022809R8650	3.4
4	315	315/315	OT315E04WP	1SCA022809R8900	4.0
3	315	315/315	OT315E12WP	1SCA022809R9380	3.4
4	315	315/315	OT315E22WP	1SCA022810R0900	4.0
3	400	400/400	OT400E03WP	1SCA022809R8310	3.4
4	400	400/400	OT400E04WP	1SCA022809R8810	4.0
3	400	400/400	OT400E12WP	1SCA022809R9200	3.4
4	400	400/400	OT400E22WP	1SCA022810R0570	4.0

Shafts, pistol handles and terminal bolt kits included as standard

Suitable for switches	Shaft	Handle	Terminal bolt kit
OT200...250_P	OXP6X210	OHB65J6	M8x25
OT315...400_P	OXP12X185	OHB95J12	M10x30

Manual switch-disconnectors OT160...4000, IEC

Ordering information



OT1000...1250E03P



OT1000...1250E22P

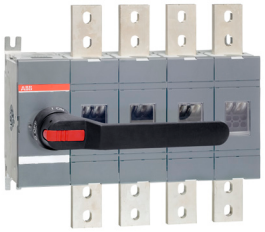

OT1600E04P



OT1600E12P

Front operated switch-disconnectors OT1000...4000, base mounting, IEC

Including terminal bolt kit, a black ON-OFF plastic pistol handle and shaft as standard. The handle is IP65 protected and padlockable in the OFF-position. The door is interlocked when the handle is in ON-position and in OFF-position when the handle is padlocked. The shaft can be adjusted to different installation depths, see page 127.

Number of poles	Open air thermal current I_{th} A	Rated operat. currents AC22A/AC23A 400...415 V A/A	Type	Order code	Weight/ unit kg
3	1000	1000/1000	OT1000E03P	1SCA022860R5930	17.0
3+N [1]	1000	1000/1000	OT1000E03N3P	1SCA100761R1001	17.9
4	1000	1000/1000	OT1000E04P	1SCA022860R6150	19.5
3	1000	1000/1000	OT1000E12P	1SCA022871R5520	17.0
4	1000	1000/1000	OT1000E22P	1SCA022871R5610	19.5
3	1250	1250/1250	OT1250E03P	1SCA022860R6230	17.0
3+N [1]	1250	1250/1250	OT1250E03N3P	1SCA022865R7060	17.9
4	1250	1250/1250	OT1250E04P	1SCA022860R6310	19.5
3	1250	1250/1250	OT1250E12P	1SCA022871R5790	17.0
4	1250	1250/1250	OT1250E22P	1SCA022871R5870	19.5
3	1600	1600/1250	OT1600E03P	1SCA022860R6580	19.0
3+N [1]	1600 [2]	1600/1250	OT1600E03N3P	1SCA022865R6920	19.9
4	1600	1600/1250	OT1600E04P	1SCA022860R6740	22.0
3	1600	1600/1250	OT1600E12P	1SCA022871R5950	19.0
4	1600	1600/1250	OT1600E22P	1SCA022871R6090	22.0

[1] Include a detachable neutral link integrated into the mechanism.
[2] I_{th} for N-pole =1250 A

Shafts, pistol handles and terminal bolt kits included as standard

Suitable for switches	Shaft	Handle	Terminal bolt kit
OT1000...1250_P	OXP12X280	OHB274J12	M12x50
OT1600_P	OXP12X280	OHB274J12	M12x60

Manual switch-disconnectors OT160...4000, IEC

Ordering information



OT2000EC03P

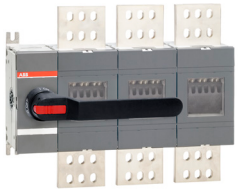

OT2000...2500E03P



OT2500E12P

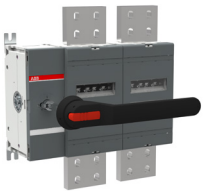

OT3200...4000E02P

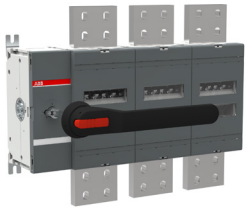

OT3200...4000E03P

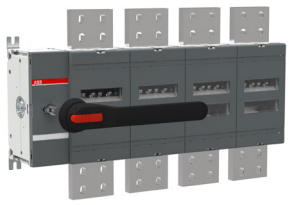

OT3200...4000E04P

Front operated switch-disconnectors OT1000...4000, base mounting, IEC

Including terminal bolt kit. In OT_P -types a black ON-OFF plastic handle and shaft as standard. The handle is IP65 protected and padlockable in the OFF-position. The door is interlocked when the handle is in ON-position and in OFF-position when the handle is padlocked. The shaft can be adjusted to different installation depths, see page 127.

Number of poles	Open air thermal current I_{th} A	Rated operat. currents AC22B 400...415 V A/A	Type	Order code	Weight/ unit kg
Handle and shat have to be ordered separately					
2	3200	3200	OT3200E02	1SCA128579R1001	22.3
3	3200	3200	OT3200E03	1SCA128480R1001	29.7
4	3200	3200	OT3200E04	1SCA128479R1001	37.1
3	3200	3200	OT3200E12	1SCA128483R1001	22.3
4	3200	3200	OT3200E13	1SCA128484R1001	29.7
4	3200	3200	OT3200E22	1SCA128485R1001	37.1
2	3800	3800	OT4000E02	1SCA128596R1001	25.4
3	3800	3800	OT4000E03	1SCA124847R1001	33.9
4	3800	3800	OT4000E04	1SCA124855R1001	42.7
3	3800	3800	OT4000E12	1SCA128872R1001	33.9
4	3800	3800	OT4000E13	1SCA124859R1001	42.7
4	3800	3800	OT4000E22	1SCA124865R1001	42.5
Handle and shaft are included (see table below)					
3	2000	2000	OT2000EC03P	1SCA161766R1001	19.0
4	2000	2000	OT2000EC04P	1SCA161768R1001	22.0
3	2000	2000	OT2000E03P	1SCA108036R1001	42.0
3+N [1]	2000 [2]	2000	OT2000E03N3P	1SCA108037R1001	42.0
4	2000	2000	OT2000E04P	1SCA108038R1001	48.0
3	2000	2000	OT2000E12P	1SCA108039R1001	42.0
4	2000	2000	OT2000E22P	1SCA108041R1001	48.0
3	2500	2500	OT2500E03P	1SCA104972R1001	42.0
3+N [1]	2500 [2]	2500	OT2500E03N3P	1SCA108035R1001	42.0
4	2500	2500	OT2500E04P	1SCA105140R1001	49.0
3	2500	2500	OT2500E12P	1SCA104978R1001	42.0
4	2500	2500	OT2500E22P	1SCA105156R1001	49.0
2	3200	3200	OT3200E02P	1SCA128581R1001	23.0
3	3200	3200	OT3200E03P	1SCA128481R1001	30.7
4	3200	3200	OT3200E04P	1SCA128482R1001	38.1
3	3200	3200	OT3200E12P	1SCA128486R1001	30.7
4	3200	3200	OT3200E13P	1SCA128487R1001	38.1
4	3200	3200	OT3200E22P	1SCA128488R1001	38.1
2	3800	3800	OT4000E02P	1SCA128595R1001	26.0
3	3800	3800	OT4000E03P	1SCA124848R1001	34.9
4	3800	3800	OT4000E04P	1SCA124856R1001	43.7
3	3800	3800	OT4000E12P	1SCA124852R1001	34.9
4	3800	3800	OT4000E13P	1SCA124861R1001	43.7
4	3800	3800	OT4000E22P	1SCA124869R1001	43.7

[1] Include a detachable neutral link integrated into the mechanism.
[2] I_{th} for N-pole = 1250 A

Recommended shafts, pistol handles and terminal bolt kits

Suitable for switches	Shaft	Handle	Terminal bolt kits (included as standard)
OT2000...2500_P	OXP12X280	OHB274J12	M12x60
OT3200...4000E02...04	-	-	M12x60
OT3200...4000E02...04P	OXP12X280	OHB274J12	M12x60

Manual switch-disconnectors OT160...4000, IEC

Ordering information



OT1250E04K

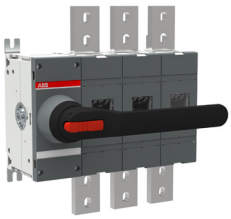

OT1600E03K

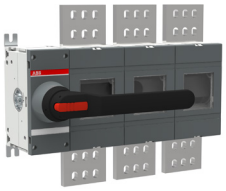

OT2500E03K

Front operated switch-disconnectors OT1000...4000, base mounting, IEC

Including a black Test-OFF-ON plastic direct mount handle and shaft as standard.

The handle is padlockable in the OFF-position.

Number of poles	Open air thermal current I_{th} A	Rated operat. currents AC22A/AC23A 400...415 V A/A	Type	Order code	Weight/ unit kg
3	1000	1000/1000	OT1000E03K	1SCA108353R1001	17.5
4	1000	1000/1000	OT1000E04K	1SCA108355R1001	21.5
3	1250	1250/1250	OT1250E03K	1SCA108356R1001	17.5
4	1250	1250/1250	OT1250E04K	1SCA108357R1001	21.5
3	1600	1600/1250	OT1600E03K	1SCA108352R1001	18.5
4	1600	1600/1250	OT1600E04K	1SCA108358R1001	21.5
3	2000	2000/-	OT2000E03K	1SCA108359R1001	42.3
4	2000	2000/-	OT2000E04K	1SCA108362R1001	47.8
3	2500	2500/-	OT2500E03K	1SCA108361R1001	42.3
4	2500	2500/-	OT2500E04K	1SCA108363R1001	48.8

Direct mount handles and terminal bolt kits included as standard

Suitable for switches	Handle	Terminal bolt kit
OT1000...1250_K	OTV1000EK	M12x50
OT1600_K	OTV1000EK	M12X60
OT2000...2500_K	OTV1000EK	M12x60

Manual switch-disconnectors OT160...4000, IEC

Ordering information

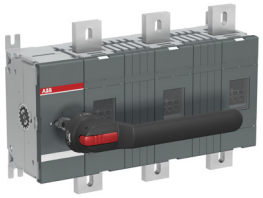

OT1000...1250E03W4P

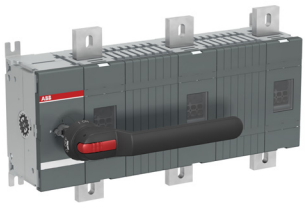

OT1000...1250E03W8P



OT2000...2500E03W4

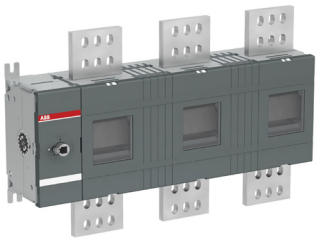

OT2000...2500E03W8

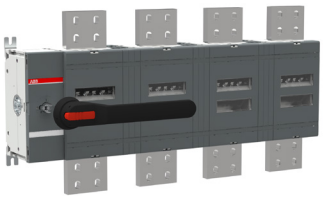

OT3200...4000E03W8

Front operated switch-disconnectors OT1000...4000 with wide phase distance, base mounting, IEC

Including a black ON-OFF plastic handle and shaft as standard. The handle is IP65 protected and padlockable in the OFF-position. The door is interlocked when the handle is in ON-position and in OFF-position when the handle is padlocked. The shaft can be adjusted to different installation depths, see page 127.

W4 = Phase distance 140 mm, W8 = Phase distance 185 mm

Number of poles	Open air thermal current I_{th} A	Rated operat. currents AC22A/AC23A 400...415 V A/A	Type	Order code	Weight/ unit kg
3	1000	1000/1000	OT1000E03W4P	1SCA022871R7310	19.8
4	1000	1000/1000	OT1000E04W4P	1SCA100762R1001	24.0
3	1000	1000/1000	OT1000E03W8P	1SCA022871R8110	22.0
3	1250	1250/1250	OT1250E03W4P	1SCA022866R1920	19.8
4	1250	1250/1250	OT1250E04W4P	1SCA022866R2220	24.0
3	1250	1250/1250	OT1250E03W8P	1SCA022871R8540	22.0
3	1600	1600/1250	OT1600E03W4P	1SCA022865R9860	22.0
4	1600	1600/1250	OT1600E04W4P	1SCA022866R1090	26.0
3	1600	1600/1250	OT1600E03W8P	1SCA022871R8970	24.0
3	2000	2000/*)	OT2000E03W4P	1SCA108042R1001	42.0
4	2000	2000/*)	OT2000E13W4P	1SCA109284R1001	48.0
3	2000	2000/*)	OT2000E03W8P	1SCA108045R1001	42.0
4	2000	2000/*)	OT2000E13W8P	1SCA109283R1001	48.0
3	2500	2500/*)	OT2500E03W4P	1SCA108047R1001	49.0
4	2500	2500/*)	OT2500E13W4P	1SCA109285R1001	49.0
3	2500	2500/*)	OT2500E03W8P	1SCA108049R1001	49.0
4	2500	2500/*)	OT2500E13W8P	1SCA109286R1001	49.0
3	3200	3200/*)	OT3200E03W8P	1SCA128599R1001	31.0
4	3200	3200/*)	OT3200E04W8P	1SCA128682R1001	39.0
3	4000	4000/*)	OT4000E03W8P	1SCA128687R1001	35.5
4	4000	4000/*)	OT4000E04W8P	1SCA128666R1001	44.0

*) AC22B

Shafts, pistol handles and terminal bolt kits included as standard

Suitable for switches	Shaft	Handle	Terminal bolt kit
OT1000...1250_P	OXP12X280	OHB274J12	M12X50
OT3200...4000E_	OXP12X280	OHB274J12	M12X60
OT3200...4000E_P	OXP12X280	OHB274J12	M12X60

Manual switch-disconnectors OT160...800E_DP, IEC

Ordering information

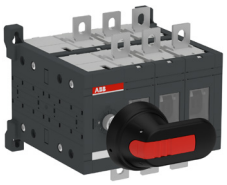

OT250E03DP

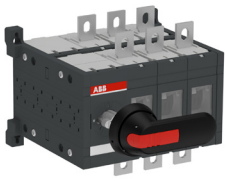

OT400E03DP



OT800E03DP

Manual 6- and 8-pole switch-disconnectors OT160...800_DP, IEC

Front operated 6- and 8-pole switch-disconnectors OT160...800, base mounting, IEC.

Including a black ON-OFF plastic pistol handle with extension and shaft as standard

The handle is IP65 protected, padlockable in the OFF-position. The door is interlocked when the handle is in ON-position and in OFF-position when the handle is padlocked. The shaft can be adjusted to different installation depths.

When the switch is maneuvered, both switches are operated at same time, and the operating handle has two positons, O - I

Number of poles	Open air thermal current I_{th} A	Rated operat. currents AC22A/AC23A 400...415 V A/A	Type	Order code	Weight/ unit kg
6	200	200/160	OT160E03DP	1SCA107188R1001	2.6
8	200	200/160	OT160E04DP	1SCA107220R1001	3.8
6	200	200/200	OT200E03DP	1SCA107189R1001	2.6
8	200	200/200	OT200E04DP	1SCA107221R1001	3.8
6	250	250/250	OT250E03DP	1SCA107190R1001	2.6
8	250	250/250	OT250E04DP	1SCA107222R1001	3.8
6	315	315/315	OT315E03DP	1SCA107314R1001	6.1
8	315	315/315	OT315E04DP	1SCA107326R1001	7.6
6	400	400/400	OT400E03DP	1SCA107315R1001	6.1
8	400	400/400	OT400E04DP	1SCA107327R1001	7.6
6	630	630/630	OT630E03DP	1SCA113346R1001	15.4
8	630	630/630	OT630E04DP	1SCA113350R1001	18.5
6	800	800/800	OT800E03DP	1SCA113347R1001	15.4
8	800	800/800	OT800E04DP	1SCA113351R1001	18.5

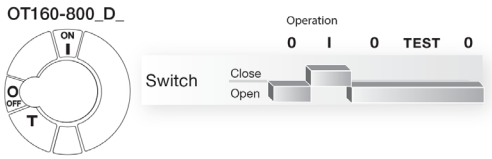

Manual switch-disconnectors OT1000...2500E_DDP, IEC

Ordering information



OT1000E03DDP

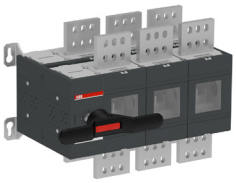

OT2500E03DDP

Manual 6- and 8-pole switches OT1000...2500_DDP, IEC

Front operated 6- and 8-pole switches OT1000...2500, base mounting, IEC.
Including a black ON-OFF plastic pistol handle with handle extention and shaft as standard
The handle is IP65 protected, padlockable in the OFF-position. The door is interlocked when the handle is in ON-position and in OFF-position when the handle is padlocked. The shaft can be adjusted to different installation depths.
When the switch is maneuvered, the operation function is divided into two stages. Only one switch is operated at a time, and the operating handle has three positions, O - I - I + II

Number of poles	Open air thermal current I_{th}	Rated operat. currents AC22A/AC23A 400...415 V	Type	Order code	Weight/ unit
	A	A/A			kg
6	1000	1000/1000	OT1000E03DDP	1SCA117172R1001	36.0
8	1000	1000/1000	OT1000E04DDP	1SCA117175R1001	42.5
6	1250	1250/1250	OT1250E03DDP	1SCA117173R1001	36.0
8	1250	1250/1250	OT1250E04DDP	1SCA117176R1001	42.5
6	1600	1600/1250	OT1600E03DDP	1SCA117174R1001	47.9
8	1600	1600/1250	OT1600E04DDP	1SCA117177R1001	49.1
6	2000	2000/-	OT2000E03DDP	1SCA117291R1001	55.8
8	2000	2000/-	OT2000E04DDP	1SCA117294R1001	68.8
6	2500	2500/-	OT2500E03DDP	1SCA117292R1001	55.8
8	2500	2500/-	OT2500E04DDP	1SCA117293R1001	68.8

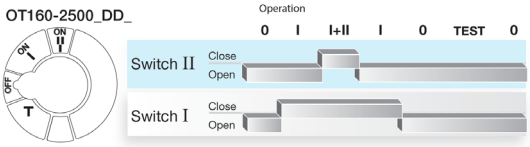

Manual switch-disconnectors OT160...4000, IEC

Ordering information for side operated switch-disconnectors



OT160EVS04K
OT200...250ES04K



OT630...800ES03K



OT630...800ES04



OT630...800ES04K

Side operated switch-disconnectors, base mounting, IEC

Including terminal bolt kit. In OT_K -types a black ON-OFF direct mount handle as standard. The handle is padlockable in the OFF-position.

Number of poles	Open air thermal current I_{th} A	Rated operat. currents AC22A/AC23A 400...415 V A/A	Type	Order code	Weight/ unit kg
Handle has to be ordered separately					
3	200	200/160	OT160EVS03	1SCA120563R1001	1.8
4	200	200/160	OT160EVS04	1SCA120564R1001	2.2
3	200	200/200	OT200ES03	1SCA022860R0200	1.8
4	200	200/200	OT200ES04	1SCA022860R0540	2.2
3	250	250/250	OT250ES03	1SCA022860R0890	1.8
4	250	250/250	OT250ES04	1SCA022860R1010	2.2
3	315	315/315	OT315ES03	1SCA022860R1270	3.4
4	315	315/315	OT315ES04	1SCA022860R1510	4.0
3	400	400/400	OT400ES03	1SCA022860R1780	3.4
4	400	400/400	OT400ES04	1SCA022860R1940	4.0
3	630	630/630	OT630ES03	1SCA022860R2240	7.0
4	630	630/630	OT630ES04	1SCA022860R2410	8.2
3	800	800/800	OT800ES03	1SCA022860R2670	7.0
4	800	800/800	OT800ES04	1SCA022860R2830	8.2
Direct mount handle included					
3	200	200/160	OT160EVS03K	1SCA120570R1001	1.9
4	200	200/160	OT160EVS04K	1SCA120565R1001	2.3
3	200	200/200	OT200ES03K	1SCA022860R0620	1.9
4	200	200/200	OT200ES04K	1SCA022860R0710	2.3
3	250	250/250	OT250ES03K	1SCA022860R0970	1.9
4	250	250/250	OT250ES04K	1SCA022860R1190	2.3
3	315	315/315	OT315ES03K	1SCA022860R1350	3.5
4	315	315/315	OT315ES04K	1SCA022860R1600	4.1
3	400	400/400	OT400ES03K	1SCA022860R1860	3.5
4	400	400/400	OT400ES04K	1SCA022860R2080	4.1
3	630	630/630	OT630ES03K	1SCA022860R2320	7.0
4	630	630/630	OT630ES04K	1SCA022860R2590	8.4
3	800	800/800	OT800ES03K	1SCA022860R2750	7.2
4	800	800/800	OT800ES04K	1SCA022860R2910	8.4

Terminal bolt kits included as standard

Suitable for switches	Terminal bolt kit
OT160EV...250	M8x25
OT315...400	M10x30
OT630...800	M12x40

Manual switch-disconnectors OT160...4000, IEC

Ordering information for earthing switches

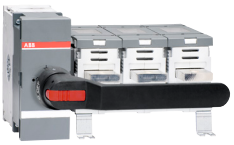

OT1000...1250EM03P



OT2000...2500EM03P

Front operated earthing switches, bottom mounted (EM), IEC

Including terminal bolt kit, a black OFF - ⏚ plastic handle and shaft as standard.
The handle is padlockable in OFF- and ⏚ -position.
The mechanism is turned 90 degrees for space saving. Max. number of operations 1200.

I_{cw}= Rated short-time withstand current, I_{cm}= Rated short-circuit making capacity

Number of poles	I_{cw} / 1 s kA	I_{cw} / 0.25 s kA	I_{cm} peak kA	Type	Order code	Weight/ unit kg
I_{cw} / 1 s = 50 kA, I_{cm} = 110 kA (peak)						
3	50	50	110	OT1000EM03P	1SCA118937R1001	17.5
4	50	50	92	OT1000EM04P	1SCA118950R1001	20.0
3	50	50	110	OT1250EM03P	1SCA115708R1001	17.5
4	50	50	92	OT1250EM04P	1SCA118949R1001	20.0
3	50	50	110	OT1600EM03P	1SCA115815R1001	19.5
4	50	50	92	OT1600EM04P	1SCA118948R1001	22.5
I_{cw} / 1 s = 55 kA, I_{cw} / 0.25 s = 80 kA, I_{cm} = 176 kA (peak)						
3	55	80	176	OT2000EM03P	1SCA118939R1001	42.5
4	55	80	176	OT2000EM04P	1SCA118947R1001	49.5
3	55	80	176	OT2500EM03P	1SCA115835R1001	42.5
4	55	80	176	OT2500EM04P	1SCA118946R1001	49.5

Front operated earthing switches with wide phase distance, bottom mounted (EM), IEC

Including terminal bolt kit, a black OFF - ⏚ plastic handle and shaft as standard.
The handle is padlockable in OFF- and ⏚ -position. W4=140 mm, W8=185 mm.
The mechanism is turned 90 degrees for space saving. Max. number of operations 1200.

Number of poles	I_{cw} / 1 s kA	I_{cw} / 0.25 s kA	I_{cm} peak kA	Type	Order code	Weight/ unit kg
I_{cw} / 1 s = 50 kA, I_{cm} = 110 kA (peak)						
3	50	50	110	OT1250EM03W4P	1SCA115805R1001	20.5
3	50	50	110	OT1250EM03W8P	1SCA115810R1001	22.5
4	50	50	92	OT1250EM04W4P	1SCA118940R1001	24.5
4	50	50	92	OT1250EM04W8P	1SCA118941R1001	26.5
3	50	50	110	OT1600EM03W4P	1SCA115822R1001	20.5
3	50	50	110	OT1600EM03W8P	1SCA115827R1001	22.5
4	50	50	92	OT1600EM04W4P	1SCA118942R1001	24.5
4	50	50	92	OT1600EM04W8P	1SCA118944R1001	26.5
I_{cw} / 1 s = 55 kA, I_{cw} / 0.25 s = 80 kA, I_{cm} = 176 kA (peak)						
3	55	80	176	OT2500EM03W4P	1SCA115840R1001	45.0
3	55	80	176	OT2500EM03W8P	1SCA115843R1001	47.0
4	55	80	176	OT2500EM04W4P	1SCA118943R1001	52.0
4	55	80	176	OT2500EM04W8P	1SCA118945R1001	54.0

Manual switch-disconnectors OT160...4000, IEC

Ordering information for earthing switches



OT1000...1250EP03P

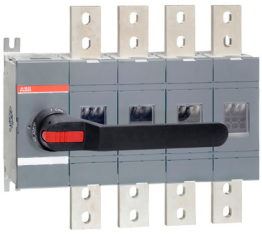

OT1600EP04P

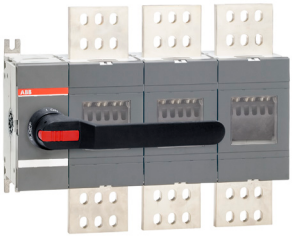

OT2000...2500EP03P

Front operated earthing switches, base mounted (EP), IEC

Including terminal bolt kit, a black OFF - ⏚ plastic handle and shaft as standard.
The handle is padlockable in OFF- and ⏚ -position. Max. number of operations 1200.

I_{cw}= Rated short-time withstand current, I_{cm}= Rated short-circuit making capacity

Number of poles	I_{cw} / 1 s kA	I_{cw} / 0.25 s kA	I_{cm} peak kA	Type	Order code	Weight/ unit kg
I_{cw} / 1 s = 50 kA, I_{cm} = 110 kA (peak)						
3	50	50	110	OT1000EP03P	1SCA118451R1001	17.0
4	50	50	92	OT1000EP04P	1SCA118452R1001	19.5
3	50	50	110	OT1250EP03P	1SCA118453R1001	17.0
4	50	50	92	OT1250EP04P	1SCA118454R1001	19.5
3	50	50	110	OT1600EP03P	1SCA118455R1001	19.0
4	50	50	92	OT1600EP04P	1SCA118456R1001	22.0
I_{cw} / 1 s = 55 kA, I_{cw} / 0.25 s = 80 kA, I_{cm} = 176 kA (peak)						
3	55	80	176	OT2000EP03P	1SCA118457R1001	42.0
4	55	80	176	OT2000EP04P	1SCA118458R1001	49.0
3	55	80	176	OT2500EP03P	1SCA118459R1001	42.0
4	55	80	176	OT2500EP04P	1SCA118460R1001	49.0

Manual switch-disconnectors OT200...2000, UL

Ordering information for non-fusible disconnect switches



OT200U03P



OT400U03P



OT600U04P



OT800...1200U03P



OT1600...2000U03



OT1600...2000U04

Front operated non-fusible disconnect switches, base mounting, UL/CSA

Handle and shaft need to be ordered separately. Terminal bolts are included.

Number of poles	Ampere rating, 600 V AC	Horsepower rating 3-phase 240 V AC	480 V AC	600 V AC	Type	Order code	Weight/unit kg	lb
	A	HP	HP	HP				
Handle (NEMA 1, 3R, 12, IP65) and shaft have to be ordered separately								
3	200	75	150	200	OT200U03	1SCA022723R0220	1.6	3.5
4	200	75	150	200	OT200U04	1SCA022723R0490	2.0	4.4
3	200	75	150	200	OT200U12	1SCA022752R1890	1.6	3.5
4	200	75	150	200	OT200U22	1SCA022741R8960	2.0	4.4
3	400	125	250	350	OT400U03	1SCA022747R6490	3.0	6.6
4	400	125	250	350	OT400U04	1SCA022748R1060	3.6	7.9
3	400	125	250	350	OT400U12	1SCA022754R6450	3.0	6.6
4	400	125	250	350	OT400U22	1SCA022762R7110	3.6	7.9
3	600	200	450	500	OT600U03	1SCA022798R0730	6.2	13.7
4	600	200	450	500	OT600U04	1SCA022800R1750	7.5	16.5
3	600	200	450	500	OT600U12	1SCA022800R1830	6.2	13.7
4	600	200	450	500	OT600U22	1SCA022800R2130	7.5	16.5
3	800	250	500	500	OT800U03	1SCA105635R1001	18	39.7
4	800	250	500	500	OT800U04	1SCA105636R1001	21	46.3
3	800	250	500	500	OT800U12	1SCA105637R1001	18	39.7
4	800	250	500	500	OT800U22	1SCA105639R1001	21	46.3
3	1200		-	-	OT1200U03	1SCA022860R6820	18	39.7
4	1200		-	-	OT1200U04	1SCA022860R7040	21	46.3
3	1200		-	-	OT1200U12	1SCA105659R1001	18	39.7
4	1200		-	-	OT1200U22	1SCA105663R1001	21	46.3
2	1600				OT1600U02	1SCA144197R1001	37	81.6
3	1600				OT1600U03	1SCA144198R1001	52	114.6
4	1600				OT1600U04	1SCA144199R1001	69	152.1
3	1600				OT1600U12	1SCA144200R1001	52	114.6
4	1600				OT1600U13	1SCA144201R1001	69	152.1
4	1600				OT1600U22	1SCA144202R1001	69	152.1
2	2000				OT2000U02	1SCA144203R1001	37	81.6
3	2000				OT2000U03	1SCA117313R1001	52	114.6
4	2000				OT2000U04	1SCA117316R1001	69	152.1
3	2000				OT2000U12	1SCA117332R1001	52	114.6
4	2000				OT2000U13	1SCA117336R1001	69	152.1
4	2000				OT2000U22	1SCA117334R1001	69	152.1

Approvals:
UL 98, CSA 22-2 No. 4
IEC 60947-3
CCC, EAC

Recommended shafts and handles

Suitable for switches	Shaft	Handle	Terminal bolt kits included
OT200U_	OXP6X210	OHB65J6	M8x25
OT400U_	OXP12X185	OHB95J12	M10x30
OT600U_	OXP12X185	OHB125J12	M12x40
OT800...2000U_	OXP12X280	OHB274J12	M12X60

Manual switch-disconnectors OT200...2000, UL

Ordering information for non-fusible disconnect switches



OT1600...2000U03P

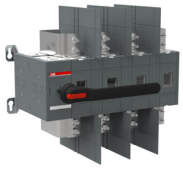

OT1600...2000U04P

Front operated non-fusible disconnect switches, base mounting, UL/CSA

Including terminal bolts, handle and shaft as standard.

Number of poles	Ampere rating, 600 V AC A	Type	Order code	Weight/ unit kg	lb
Switch with handle and shaft					
2	1600	OT1600U02P	1SCA144206R1001	38	83.8
3	1600	OT1600U03P	1SCA144207R1001	53	116.9
4	1600	OT1600U04P	1SCA144208R1001	70	154.3
3	1600	OT1600U12P	1SCA144209R1001	53	116.9
4	1600	OT1600U13P	1SCA144210R1001	70	154.3
4	1600	OT1600U22P	1SCA144211R1001	70	154.3
2	2000	OT2000U02P	1SCA144212R1001	38	83.8
3	2000	OT2000U03P	1SCA117314R1001	53	116.9
4	2000	OT2000U04P	1SCA117317R1001	70	154.3
3	2000	OT2000U12P	1SCA117333R1001	53	116.9
4	2000	OT2000U13P	1SCA117337R1001	70	154.3
4	2000	OT2000U22P	1SCA117335R1001	70	154.3

Shafts, pistol handles and terminal bolt kits included as standard

Suitable for switches	Shaft	Handle	Terminal bolt kits
OT1600...2000_P	OXP12X280	OHB274J12	M12X60



OT200U03DP

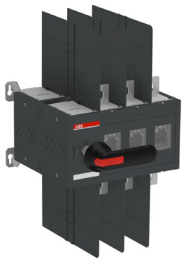

OT600U03DP

Manual 6- and 8-pole switch-disconnectors OT200...600_DP, UL

Front operated 6- and 8-pole non-fusible disconnect switches OT200...600, base mounting, UL/CSA . Including a black ON-OFF plastic pistol handle with extension and shaft as standard. The handle is NEMA1, 3R ,12 and padlockable in the OFF-position. The door is interlocked when the handle is in ON-position and in OFF-position when the handle is padlocked. The shaft can be adjusted to different installation depths. When the switch is maneuvered, both switches are operated at same time, and the operating handle has two positons, O - I.

Number of poles	Ampere rating, 600 V AC A	Horsepower rating 3-phase [HP] 240V AC	480V AC	600V AC	Type	Order code	Weight/ unit kg	lb
6	200	75	150	200	OT200U03DP	1SCA107465R1001	3.4	7.5
8	200	75	150	200	OT200U04DP	1SCA107461R1001	4.2	9.2
6	400	125	250	350	OT400U03DP	1SCA113427R1001	6.6	14.5
8	400	125	250	350	OT400U04DP	1SCA113428R1001	7.5	16.6
6	600	200	450	500	OT600U03DP	1SCA113344R1001	15.1	33.3
8	600	200	450	500	OT600U04DP	1SCA113354R1001	18.2	40.1

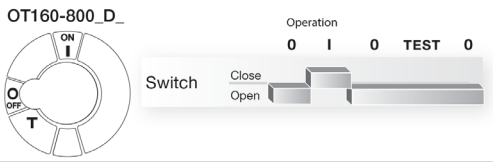

Manual switch-disconnectors OT200...2000, UL

Ordering information for side operated non-fusible disconnect switches



OT200US03

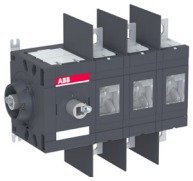

OT400US03

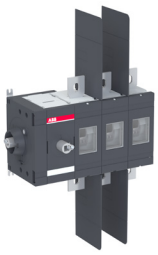

OT600US03

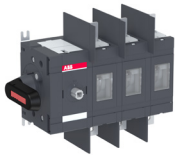

OT200US03K

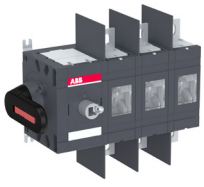

OT400US03K



OT600US03K

Side operated non-fusible disconnect switches, base mounting, UL/CSA

Including terminal bolt kit. In OT_K -types a black ON-OFF direct mount handle as standard.
The handle is padlockable in the OFF-position.

Number of poles	Ampere rating	Horsepower rating 3-phase 240 V AC	480 V AC	600 V AC	Type	Order code	Weight/unit kg	lb
	A	HP	HP	HP				
Handle and shaft have to be ordered separately								
3	200	75	150	200	OT200US03	1SCA022870R6290	1.755	3.86
4	200	75	150	200	OT200US04	1SCA022870R6370	2.155	4.74
3	400	125	250	350	OT400US03	1SCA022870R6610	3.06	6.73
4	400	125	250	350	OT400US04	1SCA022870R6700	3.56	7.83
3	600	200	400	500	OT600US03	1SCA022870R7000	6.2	13.64
4	600	200	400	500	OT600US04	1SCA022870R7260	6.2	13.64
Direct mount handle included								
3	200	75	150	200	OT200US03K	1SCA022870R6450	1.855	4.08
4	200	75	150	200	OT200US04K	1SCA022870R6530	2.255	4.96
3	400	125	250	350	OT400US03K	1SCA022870R6880	3.16	6.95
4	400	125	250	350	OT400US04K	1SCA022870R6960	3.66	8.05
3	600	200	400	500	OT600US03K	1SCA022870R7340	6.2	13.64
4	600	200	400	500	OT600US04K	1SCA022870R7420	6.2	13.64

Approvals:
- OT200, 400, 600: UL 98, CSA 22-2 No. 4
- IEC 60947-3

Recommended shafts and handles

Suitable for switches	Shaft	Handle	Terminal bolts included as standard
OT200US	OXP6X210	OHB65J6E00S	M8x25
OT400US_600US	OXP12X185	OHB145J12E00S	M10x30

Manual switch-disconnectors OT400...1200, UL

Ordering information for non-fusible disconnect switches



OT400U03P



OT600U03P

Front operated non-fusible disconnect switches for up to 1000V AC, base mounting, UL

Handle and shaft need to be ordered separately. Terminal bolts are included.

Number of poles	Ampere rating 800V AC A	Ampere rating 1000V AC A	Type	Order code	Weight/unit kg	lb
3	300	200	OT400U12-1000	1SCA159826R1001	3.0	6.6
3	300	200	OT400U03-1000	1SCA159824R1001	3.0	6.6
4	300	200	OT400U04-1000	1SCA159825R1001	3.6	7.9
4	300	200	OT400U22-1000	1SCA159823R1001	3.6	7.9
3	400	400	OT600U03-1000	1SCA161432R1001	6.2	13.7
4	400	400	OT600U04-1000	1SCA161433R1001	7.5	16.5
3	600	600	OT800U03-1000	1SCA161434R1001	18.0	39.7
4	600	600	OT800U04-1000	1SCA161435R1001	21.0	46.3
3	800	-	OT1200U03-800	1SCA161436R1001	18.0	39.7
4	800	-	OT1200U04-800	1SCA161437R1001	21.0	46.3


Feige
FILLING

Manual switch-disconnectors OT160...4000

Dimensional drawings

Front operated switch-disconnectors OT160...800, base mounting, IEC

OT160EV_P, OT200_P and OT250_P

Mechanism at the end of the switch or between the poles

OT160EV_/200E_/250E_				
[mm]	E01	E02	E03	E04
A	75,5	110,5	145,5	180,5
A1	55	90	125	160
B1	71	106	141	176
C1	85	120	155	190

M00011/S01843 OT200_250E01_04 F

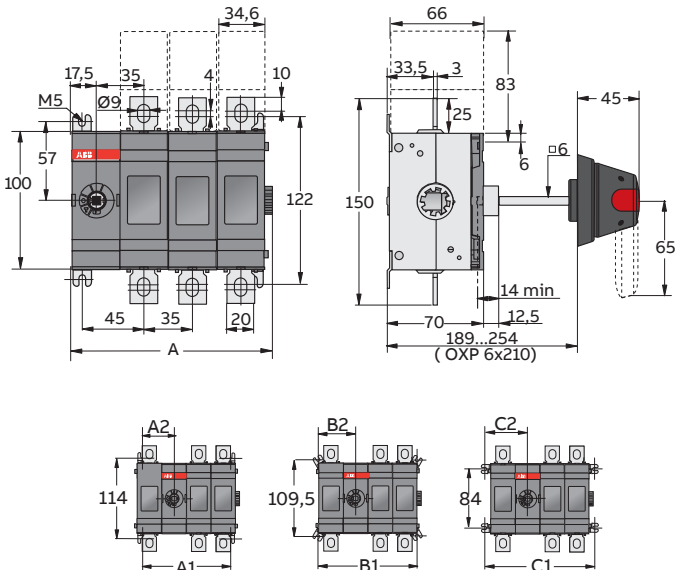

OT160EV_P, OT200_P and OT250_P

Mechanism at the end of the switch or between the poles

OT160EV_/200E_/250E_				
[mm]	E11	E12	E13	E22
A	80	80	80	115
B	115,5	150,5	185,5	185,5
A1	90	125	160	160
A2	45	45	45	80
B1	106	141	141	176
B2	53	53	53	88
C1	120	155	190	190
C2	60	60	60	95

M00017/OT200_250E11_22 F

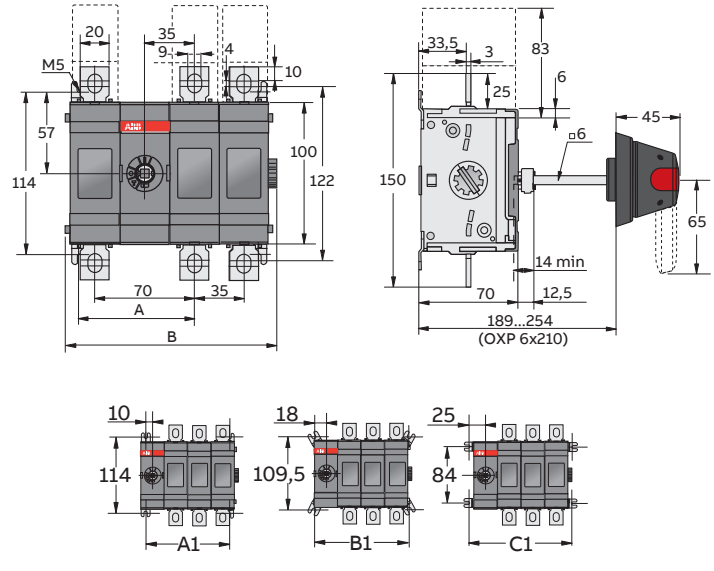

Main dimensions mm

Manual switch-disconnectors OT160...4000

Dimensional drawings

Front operated switch-disconnectors OT160...800, base mounting, IEC

OT160EV_K, OT200_K and OT250_K

OT160EV_/200E_/250E_				
[mm]	**E01K**	**E02K**	**E03K**	**E04K**
A	-	35	35	35
B	75,5	110,5	145,5	180,5
A1	114	114	114	114
A2	55	90	125	160
B1	109,5	109,5	109,5	109,5
B2	71	106	141	176
C1	84	84	84	84
C2	85	120	155	190

M00078/OT200_250E01_04K A

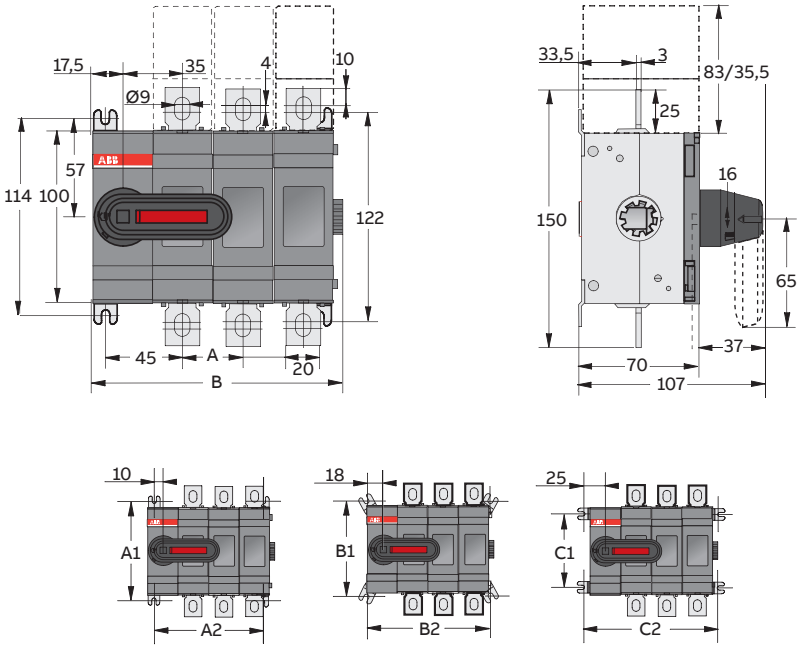

Manual switch-disconnectors OT160...4000

Dimensional drawings

Front operated switch-disconnectors OT160...800 with wide phase distance, base mounting, IEC

OT160EV_WP, OT200_WP and OT250_WP

Mechanism at the end of the switch

OT160EV_/200E_/250E_				
[mm]	E01W	E02W	E03W	E04W
A	-	43	43	43
B	83,5	126,5	169,5	212,5
A1	114	114	114	114
A2	63	106	149	192
B1	109,5	109,5	109,5	109,5
B2	79	122	165	208
C1	84	84	84	84
C2	93	136	179	222

M00073/OT200E01_04W A

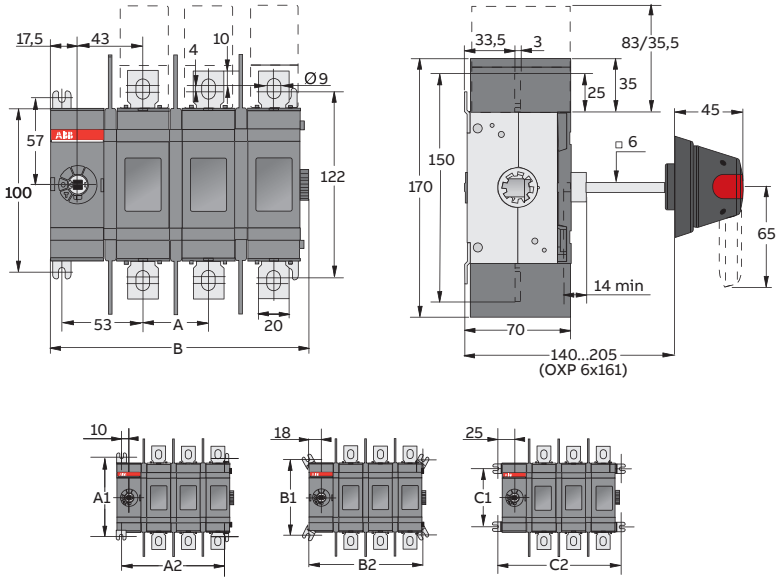

OT160EV_WP, OT200_WP and OT250_WP

Mechanism between the poles

OT160EV_/200E_/250E_				
[mm]	E11W	E12W	E13W	E22W
A	96	96	96	139
B	131,5	174,5	217,5	217,5
A1	114	114	114	114
A2	106	149	192	192
A3	53	53	53	96
B1	109,5	109,5	109,5	109,5
B2	122	165	208	208
B3	61	61	61	104
C1	84	84	84	84
C2	136	179	222	222
C3	68	68	68	111

M00074/OT200E11_22W A

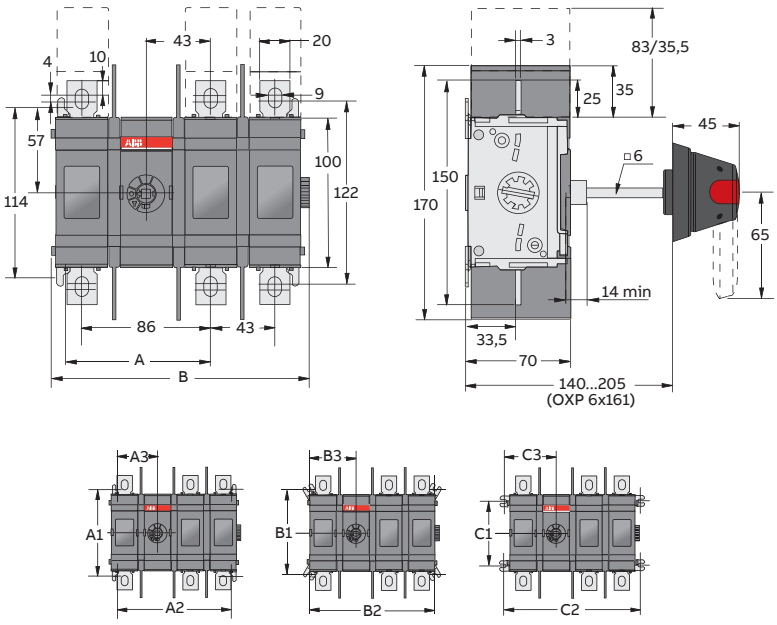

Main dimensions mm

Manual switch-disconnectors OT160...4000

Dimensional drawings

Front operated switch-disconnectors OT160...800, base mounting, IEC

OT315_P and OT400_P

Mechanism at the end of the switch or between the poles

OT315_...OT400_				
[mm]	**E01**	**E02**	**E03**	**E04**
A	103	147	191	235
B	-	44	44	44
A1	140	140	140	140
A2	78	122	166	210
B1	135	135	135	135
B2	96	140	184	228
C1	104	104	104	104
C2	114	158	202	246

M00012_ES/OT315_400E01_04 E

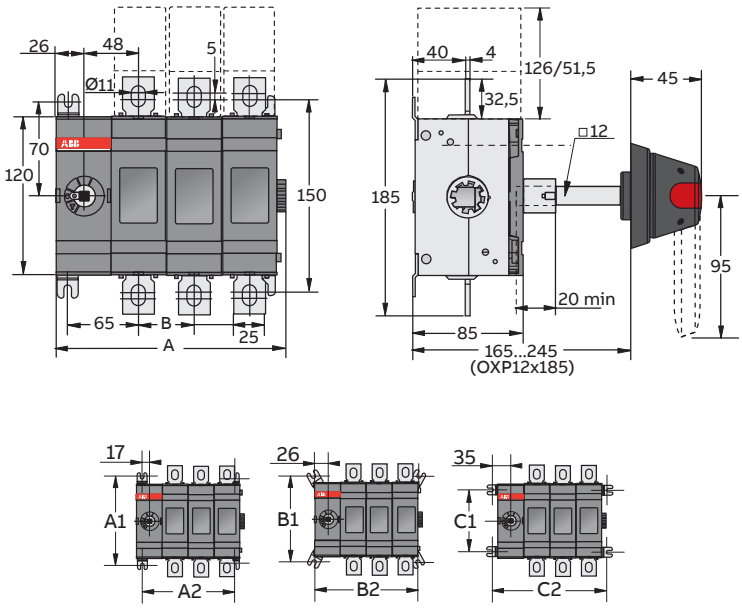

OT315_P and OT400_P

Mechanism at the end of the switch or between the poles

OT315_...OT400_				
[mm]	**E11**	**E12**	**E13**	**E22**
A	109	109	109	153
B	152	196	240	240
A1	122	166	210	210
A2	61	61	61	105
B1	140	184	228	228
B2	70	70	70	114
C1	158	202	246	246
C2	79	79	79	123

M00018/OT315_400E11_22 E

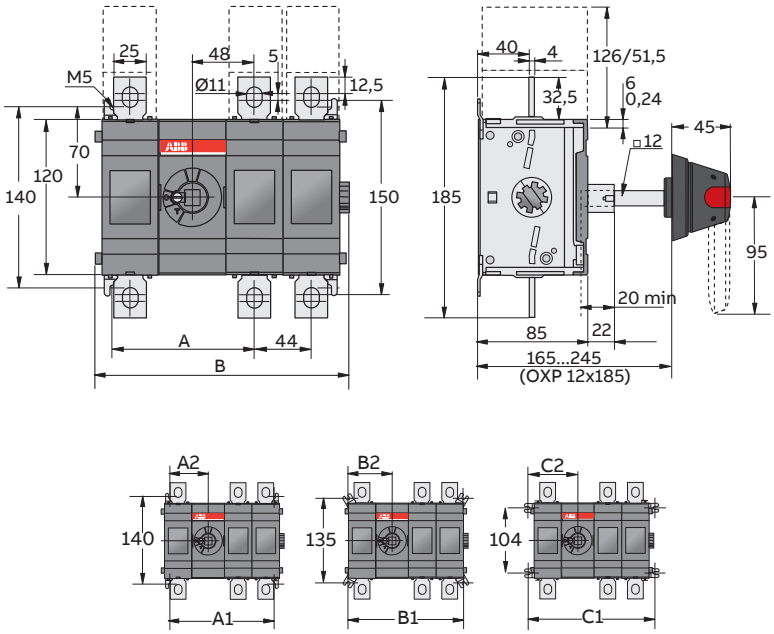

Main dimensions mm

Manual switch-disconnectors OT160...4000

Dimensional drawings

Front operated switch-disconnectors OT160...800, base mounting, IEC

OT315_K and OT400_K

OT315_...OT400_				
[mm]	E01K	E02K	E03K	E04K
A	-	44	44	44
B	103	147	191	235
A1	140	140	140	140
A2	78	122	166	210
B1	135	135	135	135
B2	96	140	184	228
C1	104	104	104	104
C2	114	158	202	246

M00079/OT315_400E01_04K A

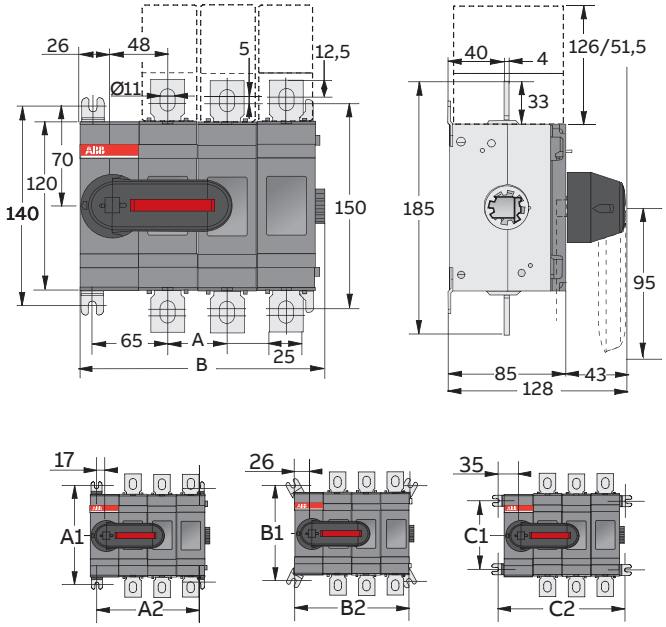

Manual switch-disconnectors OT160...4000

Dimensional drawings

Front operated switch-disconnectors OT160...800 with wide phase distance, base mounting, IEC

OT315_WP and OT400_WP

OT315/400				
[mm]	**E01W**	**E02W**	**E03W**	**E04W**
A	113	167	221	275
A1	88	142	196	250
B1	106	160	214	268
C1	124	178	232	286

M00019/OT400U/E01_04W/ES G

Remark: Dimension drawings for types OT1000_W_P...OT1600_W_P, see page 98 and OT2000...2500_W_P, see page 101.

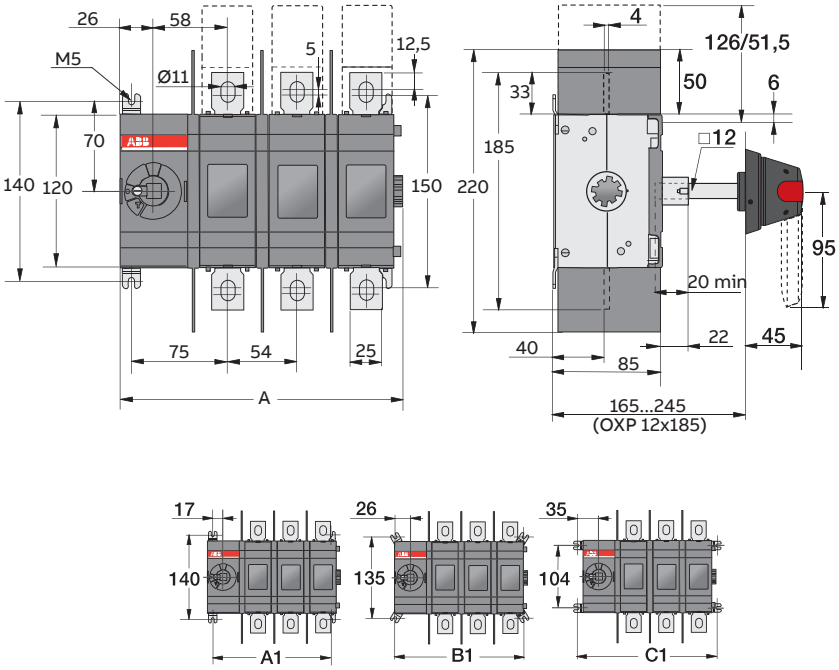

Manual switch-disconnectors OT160...4000

Dimensional drawings

Front operated switch-disconnectors OT160...800, base mounting, IEC

OT630_P and OT800_P

Mechanism at the end of the switch or between the poles

OT630/800				
[mm]	**E01**	**E02**	**E03**	**E04**
A	136/5,35	204/7,91	266/10,47	331/13,03
A1	112/4,41	177/6,97	242/9,53	307/12,09
B1	130/5,12	195/7,68	260/10,24	325/12,80
C1	148/5,83	213/8,39	278/10,95	343/13,50

C00013_/13OT630_800_01_04 B /ES

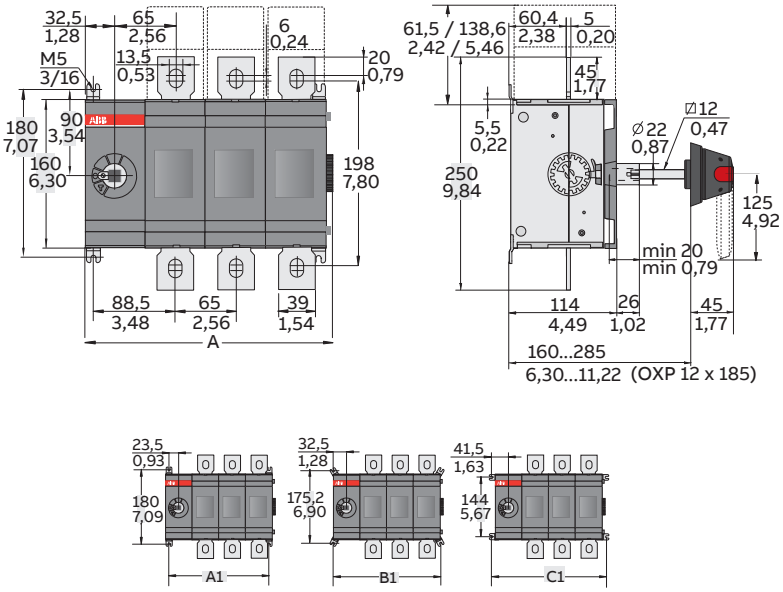

OT630_P and OT800_P

Mechanism at the end of the switch or between the poles

OT630/800				
[mm]	**E11**	**E12**	**E13**	**E22**
A	201/7,91	266/10,47	331/13,03	331/13,03
A1	177/6,97	242/9,53	307/12,09	307/12,09
B1	195/7,68	260/10,24	325/12,80	325/12,80
C1	213/8,39	278/10,95	343/13,50	343/13,50

M00082/OT630-800_11_22 C /ES

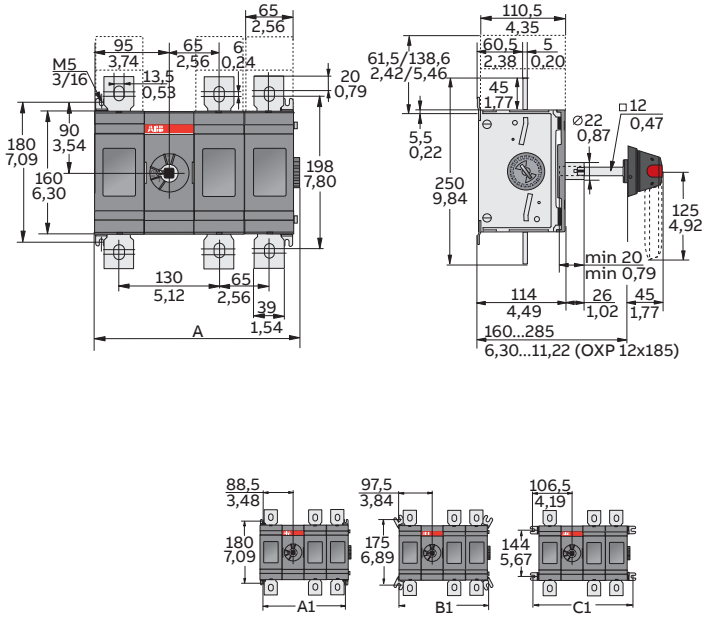

Main dimensions mm, inches

Manual switch-disconnectors OT160...4000

Dimensional drawings

Front operated switch-disconnectors OT160...800, base mounting, IEC

OT630_K and OT800_K

OT630/800				
[mm]	**E01K**	**E02K**	**E03K**	**E04K**
A	136/5,35	201/7,91	266/10,47	331/13,03
A1	112/4,41	177/6,97	242/9,53	307/12,09
B1	130/5,12	195/7,68	260/10,24	325/12,80
C1	148/5,83	213/8,39	278/10,95	343/13,50

M00096/13*OT630-800_01-04K/ES A

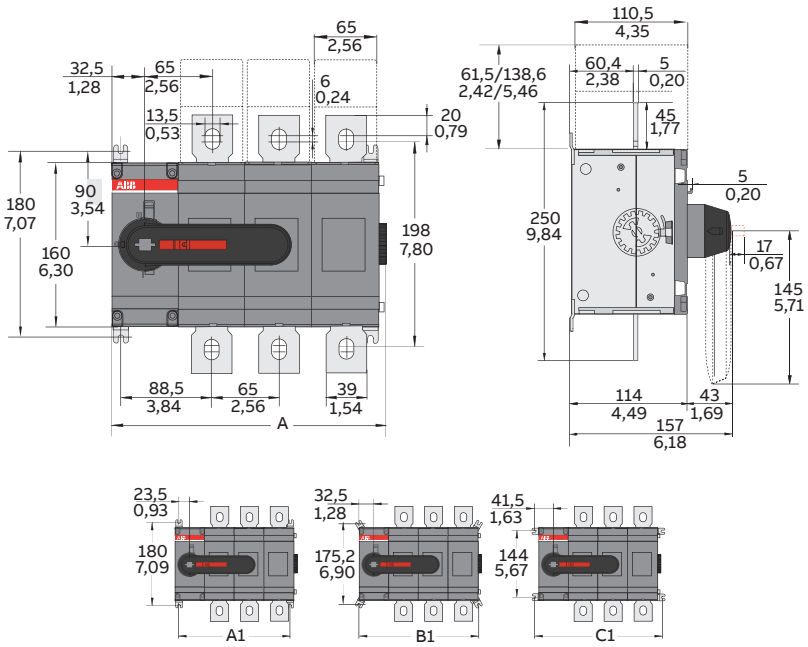

Main dimensions mm, inches

Manual switch-disconnectors OT160...4000

Dimensional drawings

Front operated switch-disconnectors OT1000...4000, base mounting, IEC

OT1000_W, OT1250_W and OT1600_W

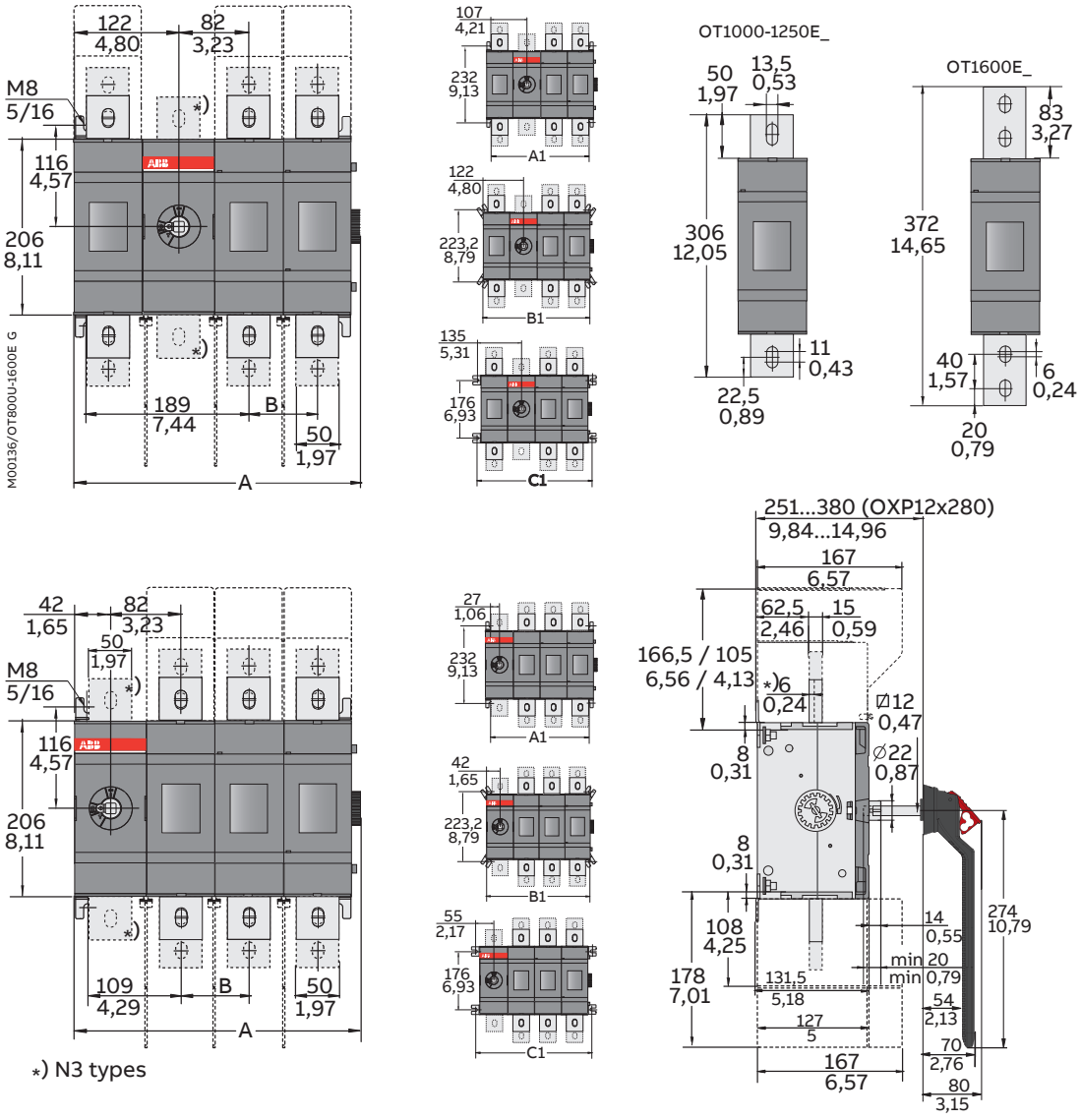

*) N3 types

OT1000/1250/1600E_				
[mm/in]	**03W4**	**04W4**	**03W8**	**04W8**
A	454,50/17,89	594,50/23,41	554,50/21,44	729,50/28,72
B	140/5,51	140/5,51	185/7,28	185/7,28
A1	414/16,30	554/21,81	504/19,84	689/27,13
B1	444/17,48	584/22,99	534/21,02	719/28,31
C1	470/18,50	610/24,02	560/22,05	745/29,33

M00135/OT800U-1600E G

Main dimensions mm, inches

Manual switch-disconnectors OT160...4000

Dimensional drawings

OT1000...1250

Mechanism at the end of the switch

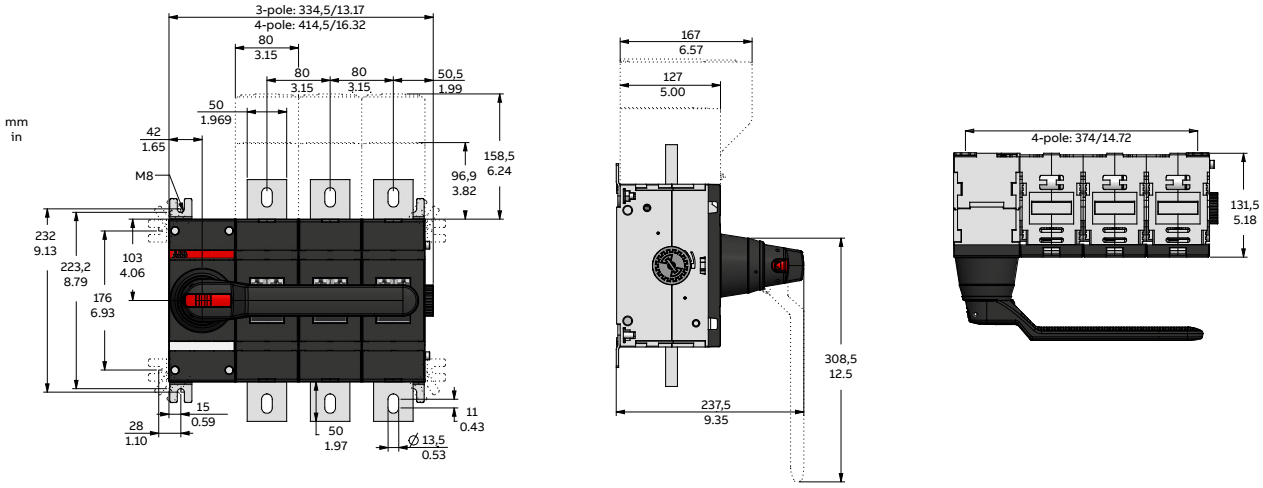

OT1000...1250

Mechanism between the poles

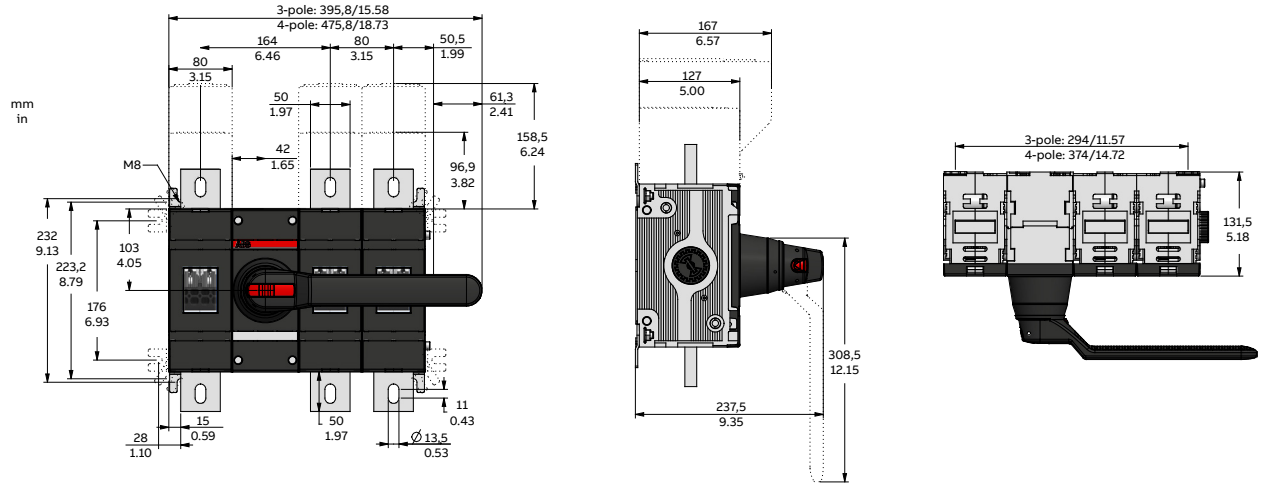

Main dimensions mm, inches

Manual switch-disconnectors OT160...4000

Dimensional drawings

OT1600

Mechanism at the end of the switch

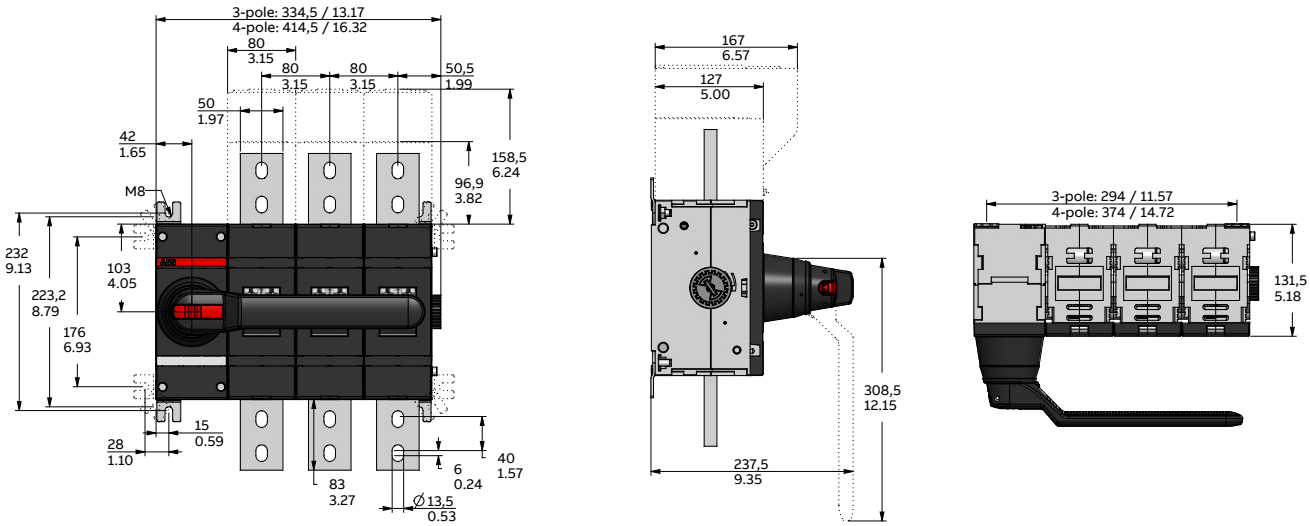

OT1600

Mechanism between the poles

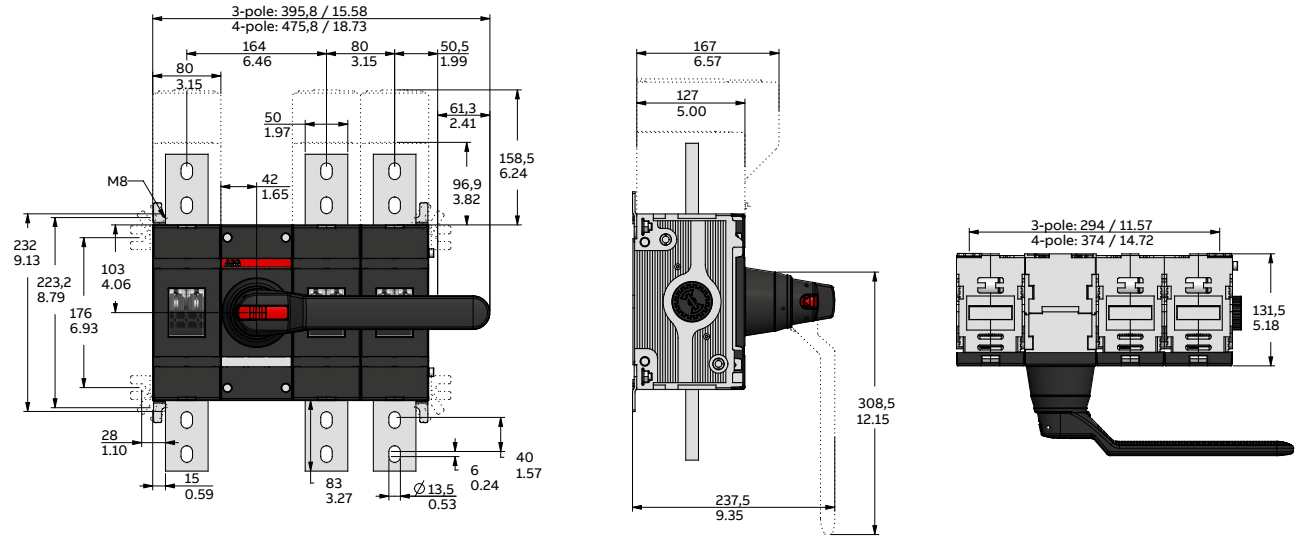

Main dimensions mm, inches

Manual switch-disconnectors OT160...4000

Dimensional drawings

Front operated 6-and 8-pole switch-disconnectors OT160...800E_DP

OT160EV...250E_DP

Mechanism at the end of the switch

OT160-250E03-04DP

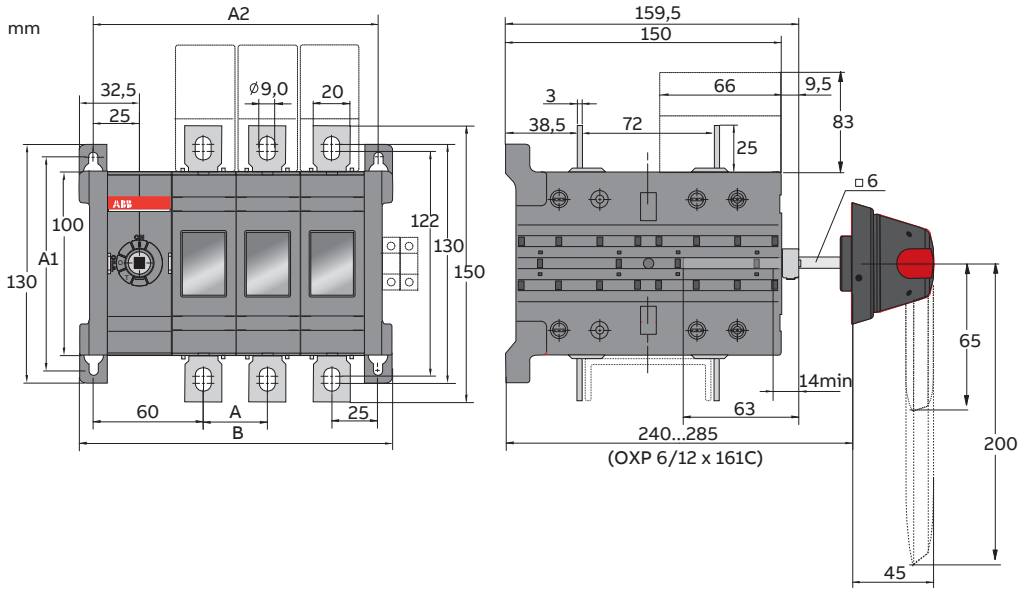

OT160-250_D_		
[mm]	E03	E04
A	35	35
A1	116	116
A2	155	190
B	170	205

OT315E...400E_DP

Mechanism at the end of the switch

OT315-400E03-04DP

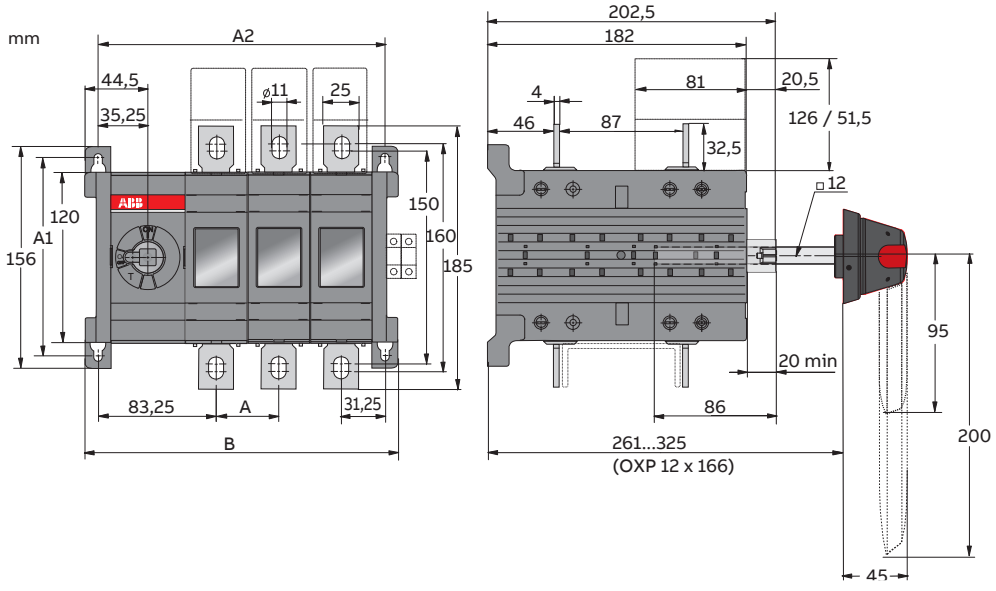

OT315-400_D_		
[mm]	E03	E04
A	44	44
A1	142	142
A2	202,5	246,5
B	221	265

Manual switch-disconnectors OT160...4000

Dimensional drawings

OT630E...800E_DP
Mechanism at the end of the switch

OT630-800E03-04DP

OT630-800_D_		
[mm]	E03	E04
A	65	65
A1	180	180
A2	290	355
B	311	376

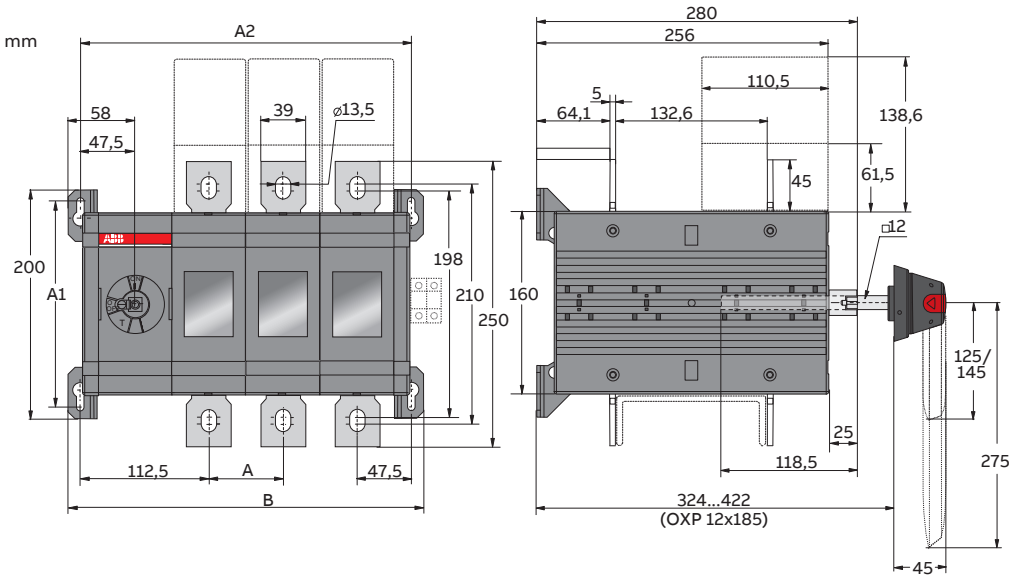

Front operated 6-and 8-pole switch-disconnectors OT1000...2500E_DDP

OT1000E...1600E_DDP
Mechanism at the end of the switch

OT1000-1600E03-04DDP

OT1000-1600_DD_		
[mm]	E03	E04
A	80	80
A1	230	230
A2	370	450
B	400	480

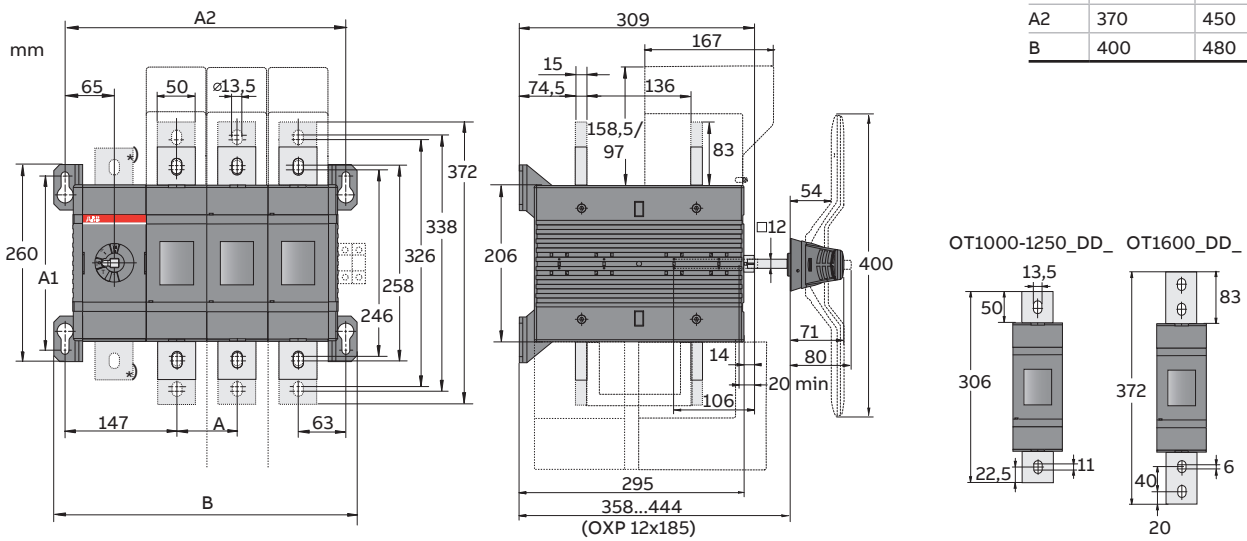

Main dimensions mm, inches

Manual switch-disconnectors OT160...4000

Dimensional drawings

Front operated 6-and 8-pole switch-disconnectors OT1000...2500E_DDP

OT2000E...2500E_DDP
Mechanism at the end of the switch

OT2000-2500E03-04DDP

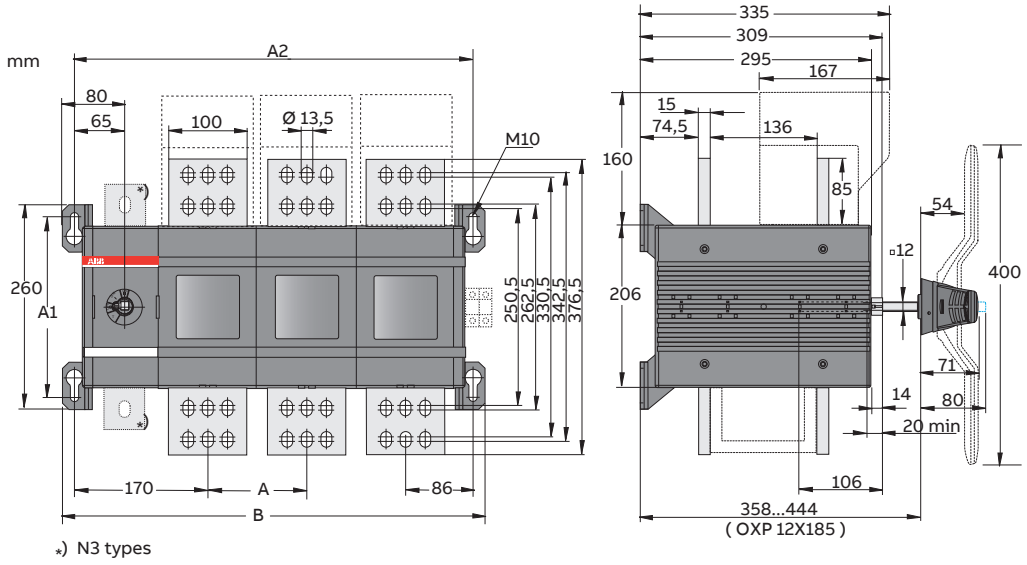

OT2000-2500_DD_		
[mm]	**E03**	**E04**
A	126	126
A1	230	230
A2	508	634
B	538	664

Manual switch-disconnectors OT160...4000

Dimensional drawings

Front operated switch-disconnectors OT1000...4000, base mounting, IEC

OT2000_P and OT2500_P

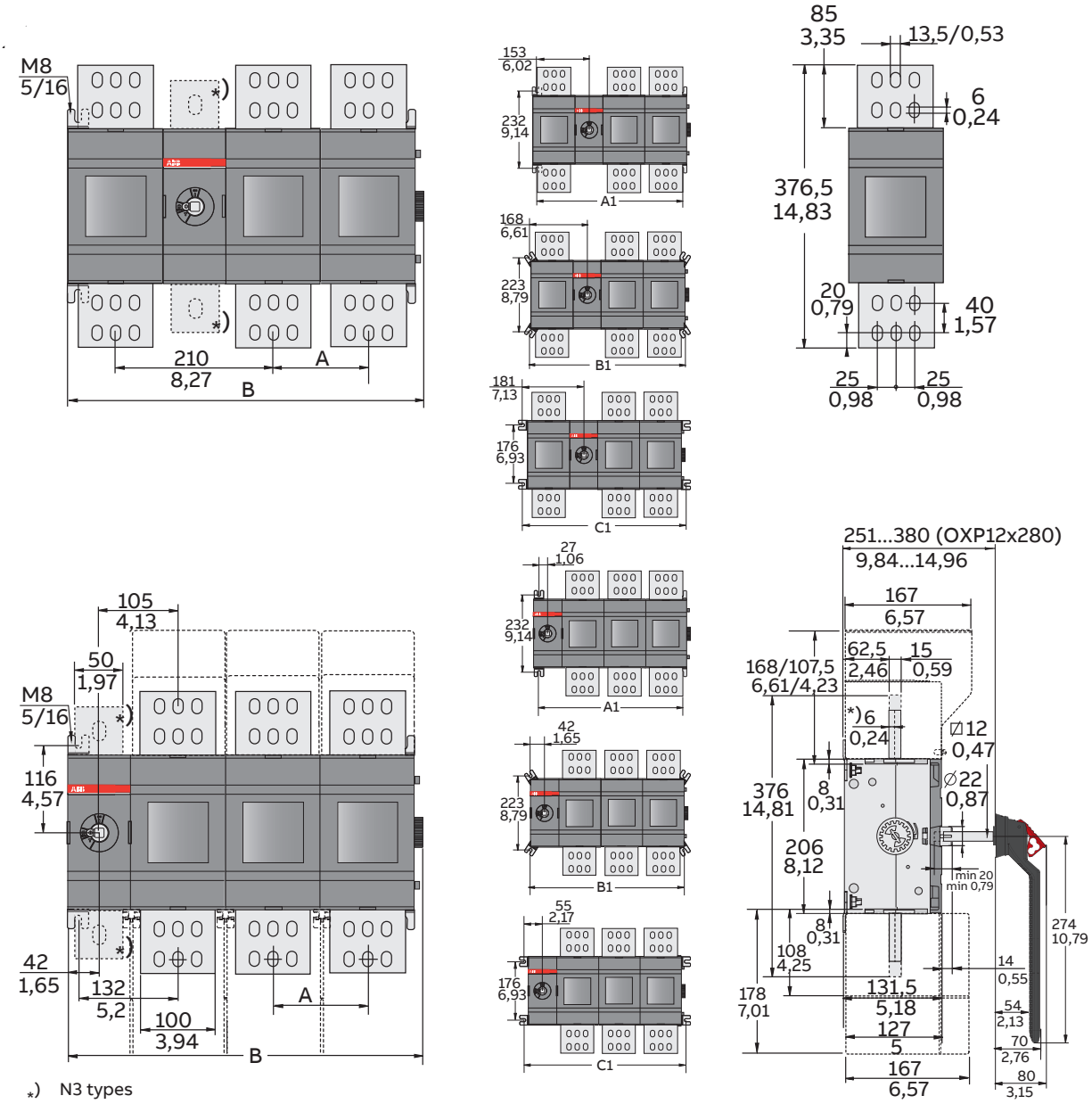

*) N3 types

OT2000/2500E_

[mm/in]	01	02	03	04	11	12	13	22	03W4	04W4	03W8	04W8
A		126/4,96	126/4,96	126/4,96		126/4,96	126/4,96	126/4,96	140/5,51	140/5,51	185/7,28	185/7,28
B	220,5/8,68	346,5/13,64	472,5/18,60	598,5/23,56	346,5/13,64	472,5/18,60	598,5/23,56	598,5/23,56	500,5/19,70	640,5/25,22	590,5/23,25	775,5/30,53
A1	180/7,09	306/12,05	432/17,01	558/21,97	306/12,05	432/17,01	558/21,97	558/21,97	460/18,11	600/23,62	550/21,65	735/28,94
B1	210/8,27	336/13,23	462/18,19	588/23,15	336/13,23	462/18,19	588/23,15	588/23,15	490/19,29	630/24,80	580/22,83	765/30,12
C1	236/9,29	362/14,25	488/19,21	614/24,17	362/14,25	488/19,21	614/24,17	614/24,17	516/20,31	656/25,83	606/23,86	791/31,14

M00137/ OT2000_2500E01-04 D

Manual switch-disconnectors OT160...4000

Dimensional drawings

OT2000...2500

Mechanism at the end of the switch

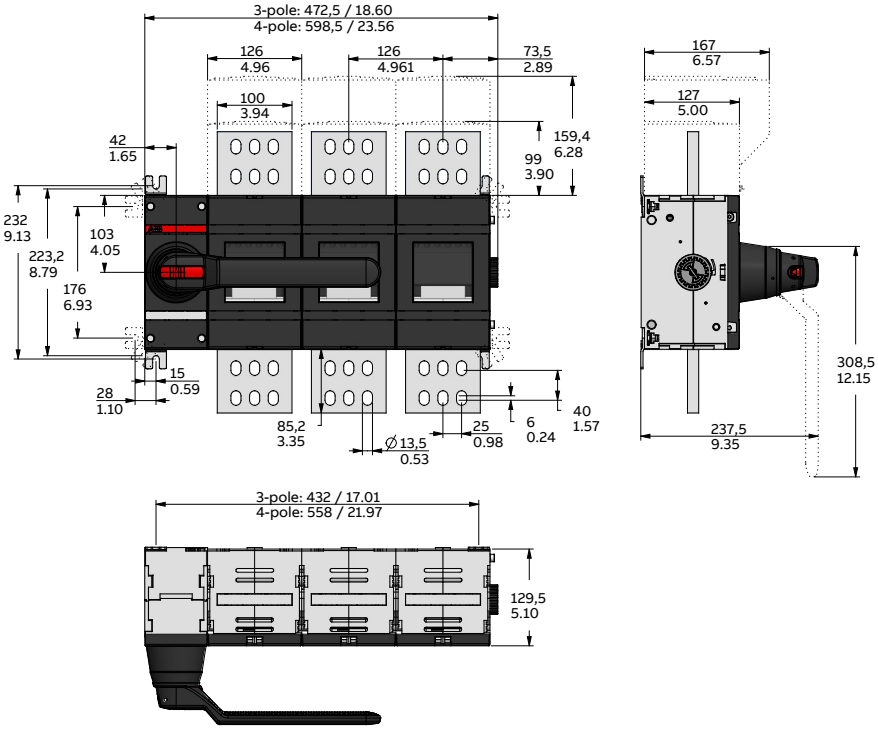

OT2000...2500

Mechanism between the poles

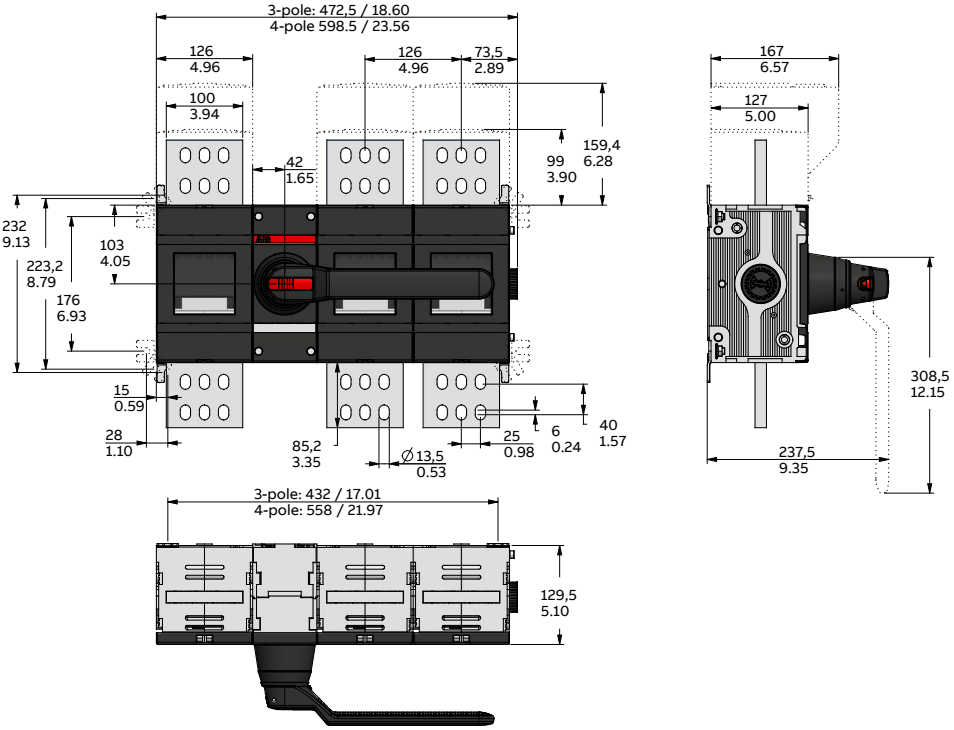

Main dimensions mm, inches

Manual switch-disconnectors OT160...4000

Dimensional drawings

Front operated switch-disconnectors OT1000...4000, base mounting, IEC

OT3200...4000E_

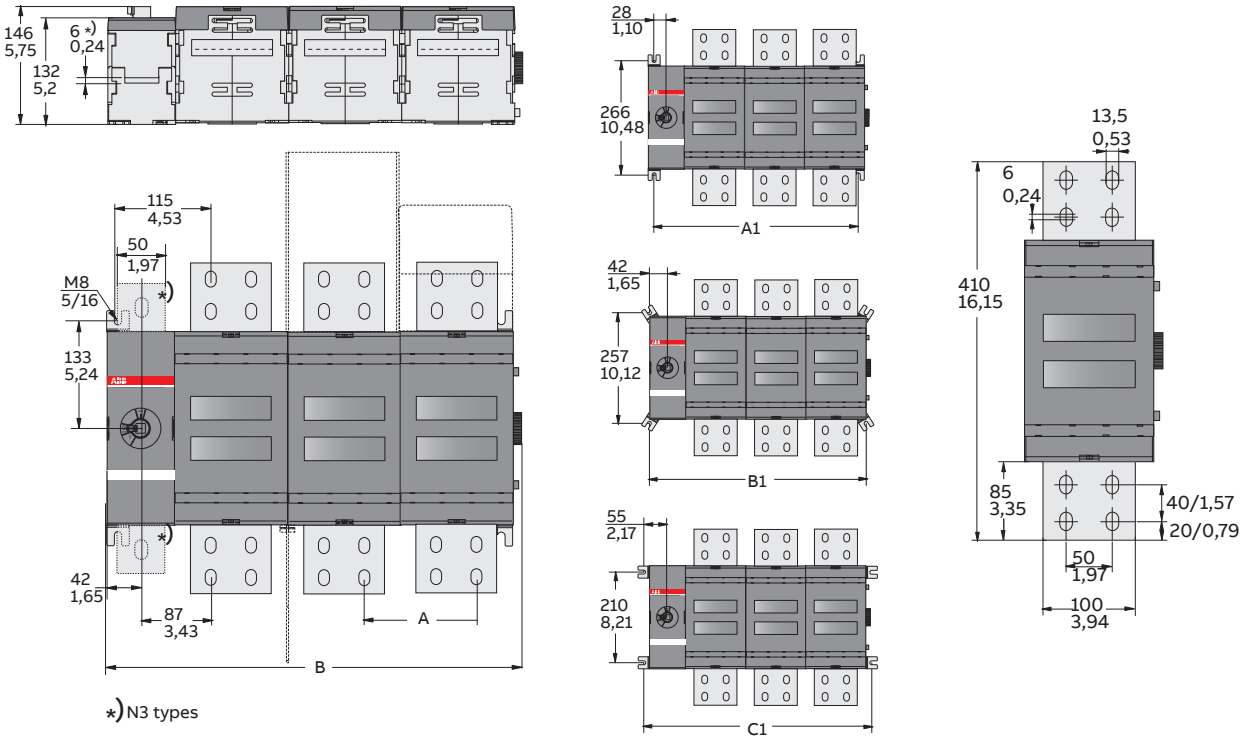

OT3200E_, 4000E_						
[mm/in]	01	02	03	04	03W8	04W8
A		140/5,51	140/5,51	140/5,51	185/7,28	185/7,28
B	234/9,21	374/14,72	514/20,24	654/25,75	604/23,78	789/31,06
A1	195/7,68	335/13,19	475/18,70	615/24,21	565/22,24	750/29,53
B1	224/8,82	364/14,33	504/19,84	644/25,35	594/23,39	779/30,67
C1	250/9,84	390/15,35	530/20,87	670/26,38	805/31,69	619/24,37

M00421/OT3200_4000E01-04 E

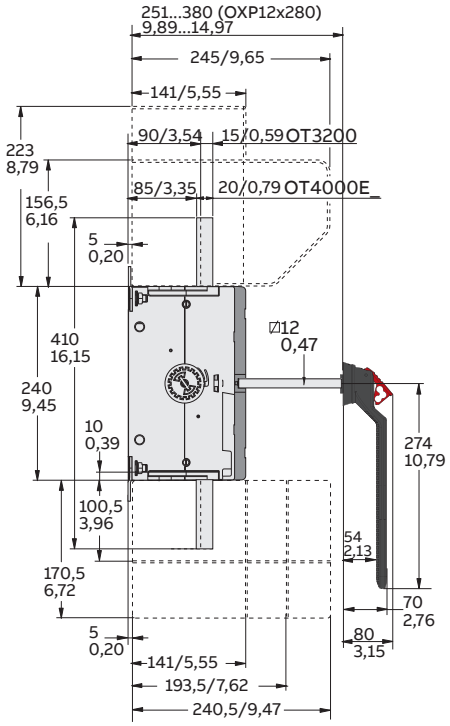

Main dimensions mm, inches

Manual switch-disconnectors OT160...4000

Dimensional drawings

Side operated switch-disconnectors OT160...800, base mounting, IEC

OT160EVS, OT200ES_ and OT250ES_

OT160EV_/200E_/250E_, OT160EV_/200E/250E_K				
[mm/in]	ES01	ES02	ES03	ES04
A	128,5/5,06	163,5/6,44	198,5/7,82	233,5/9,2
B	111,5/4,39	146,5/5,77	181,5/7,15	216,5/8,53
A1	71,5/2,81	106,5/4,2	141,5/5,57	176,5/6,95
B1	86,5/3,41	121,5/4,79	156,5/6,16	191,5/7,54
C1	101,5/4	136,5/5,38	171,5/6,75	206,5/8,14

M00144/OT200-250ES01_-04_ A

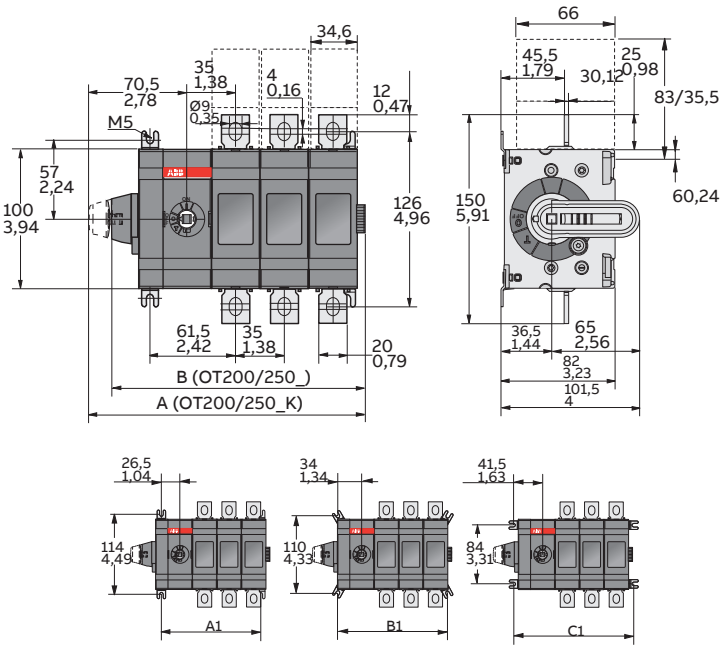

Main dimensions mm, inches

Manual switch-disconnectors OT160...4000

Dimensional drawings

Side operated switch-disconnectors OT160...800, base mounting, IEC

OT315ES_ and OT400ES_

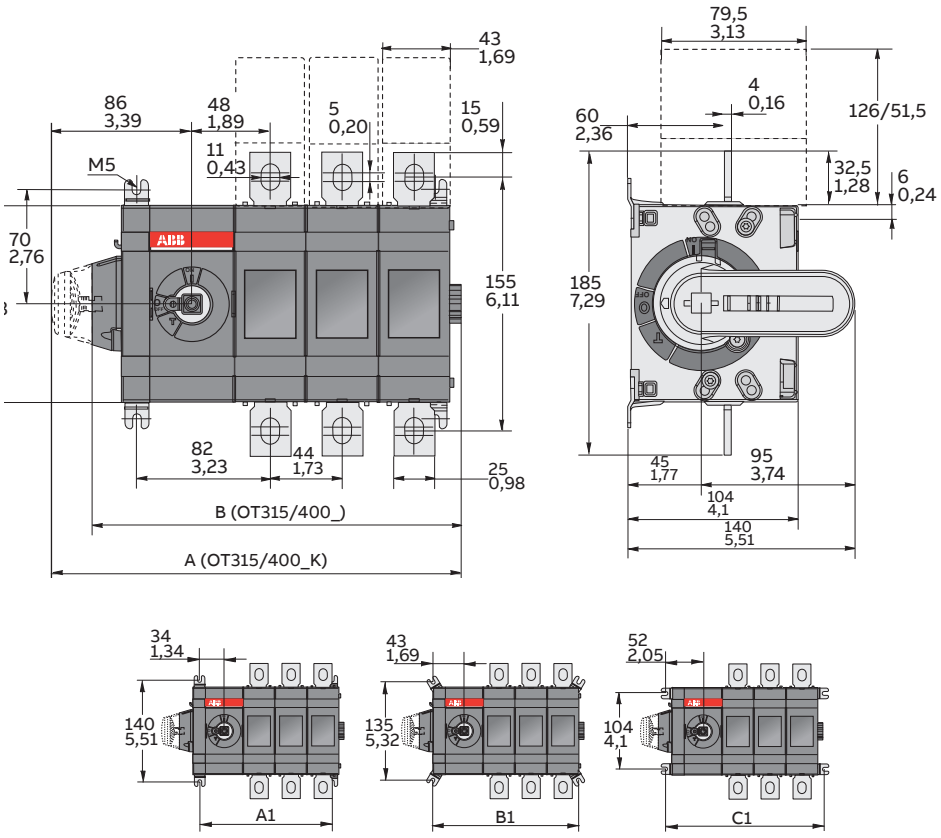

OT315/400_, OT315/400_K				
[mm/in]	**ES01**	**ES02**	**ES03**	**ES04**
A	163/6,42	207/8,16	251/9,89	295/11,62
B	138/5,44	182/7,17	226/8,9	270/10,64
A1	95/3,74	139/5,48	183/7,21	227/8,94
B1	113/4,45	157/6,18	201/7,92	245/9,65
C1	131/5,16	175/6,89	219/8,63	263/10,36

M00145/OT315-400ES01_-04_ A

Main dimensions mm, inches

Manual switch-disconnectors OT160...4000

Dimensional drawings

Side operated switch-disconnectors OT160...800, base mounting, IEC

OT630ES_ and OT800ES_

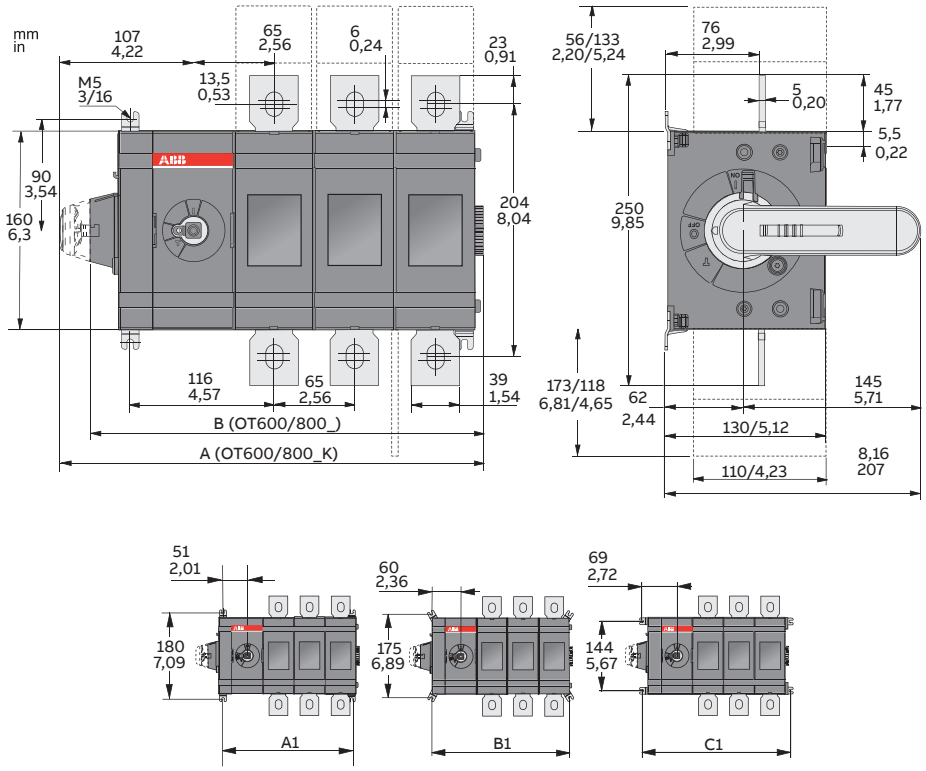

OT600/630/800_, OT600/630/800_K				
[mm/in]	**ES01/US01**	**ES02/US02**	**ES03/US03**	**ES04/US04**
A	211/8,31	276/10,87	341/13,43	406/16
B	186/7,33	251/9,89	316/12,45	381/15,01
A1	140/5,51	205/8,08	270/10,64	335/13,2
B1	158/6,22	223/8,79	288/11,34	353/13,91
C1	176/6,93	241/9,49	306/12,06	371/14,62

M00147/OT600-800ES01_04 C

Manual switch-disconnectors OT160...4000

Dimensional drawings

Front operated earthing switches OT1000...2500, bottom mounted, IEC

OT1000...1600EM_

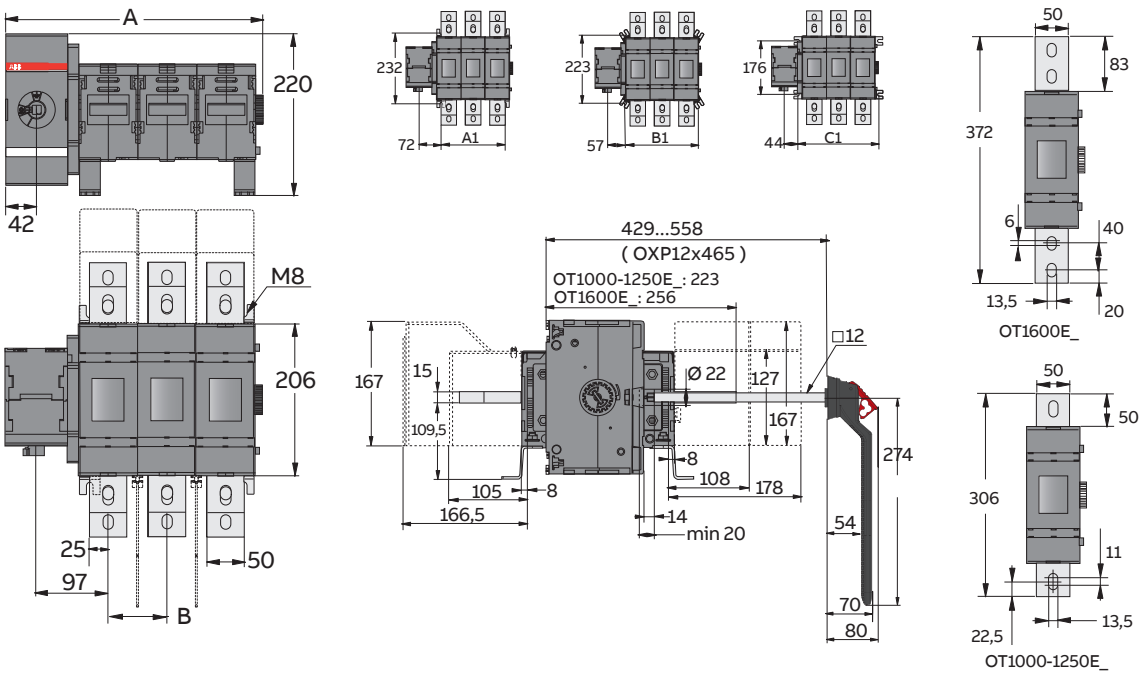

OT1000/1250/1600EM_								
[mm/in]	**01**	**02**	**03**	**04**	**03W4**	**04W4**	**03W8**	**04W8**
A	189,5/7,46	269,5/10,61	349,5/13,76	429,5/16,91	469,5/18,48	609,5/24,00	559,5/22,03	744,5/29,31
B		80/3,15	80/3,15	80/3,15	140/5,51	140/5,51	185/7,28	185/7,28
A1	50/1,97	130/5,12	210/8,27	290/11,42	330/12,99	470/18,50	420/16,54	605/23,82
B1	80/3,15	160/6,30	240/9,45	320/12,60	360/14,17	500/19,69	450/17,72	635/25,00
C1	106/4,17	186/7,32	266/10,47	346/13,62	386/15,20	526/20,71	476/18,74	661/26,02

M07012/M00348/OT1600EM03 B

Main dimensions mm, inches

Manual switch-disconnectors OT160...4000

Dimensional drawings

Front operated earthing switches OT1000...2500, with wide phase distance, bottom mounted, IEC

OT2000...2500EM_

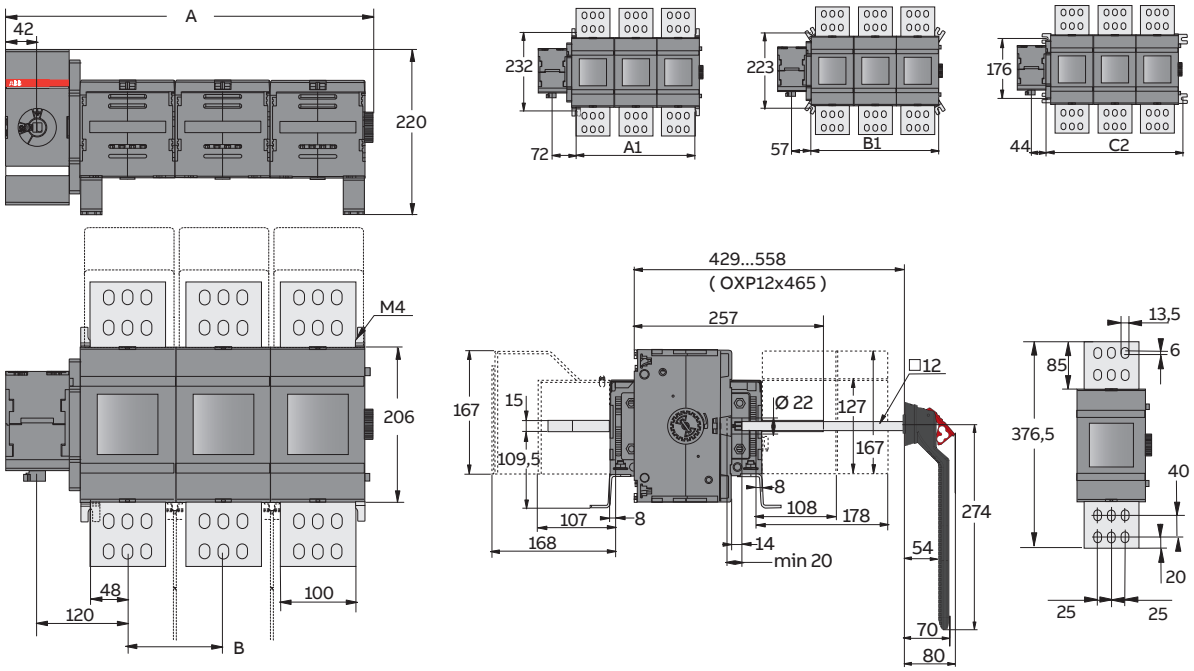

OT2000/2500EM_								
[mm/in]	**01**	**02**	**03**	**04**	**03W4**	**04W4**	**03W8**	**04W8**
A	235,5/9,27	361,5/14,23	487,5/19,19	613,5/24,15	515,5/20,30	655,5/25,81	605,5/23,84	790,5/31,12
B		126/4,96	126/4,96	126/4,96	140/5,51	140/5,51	185/7,28	185/7,28
A1	96/3,78	222/8,74	348/13,70	474/18,66	376/14,80	516/20,31	466/18,35	651/25,63
B1	126/4,96	252/9,92	378/14,88	504/19,84	406/15,98	546/21,50	496/19,53	681/26,81
C1	152/5,98	278/10,94	404/15,91	530/20,87	432/17,01	572/22,52	522/20,55	707/27,83

M07013/M00349/OT2500EM03 B

Main dimensions mm, inches

Manual switch-disconnectors OT160...4000

Dimensional drawings

Front operated earthing switches OT1000...2500, base mounted, IEC

OT1000...1600EP_

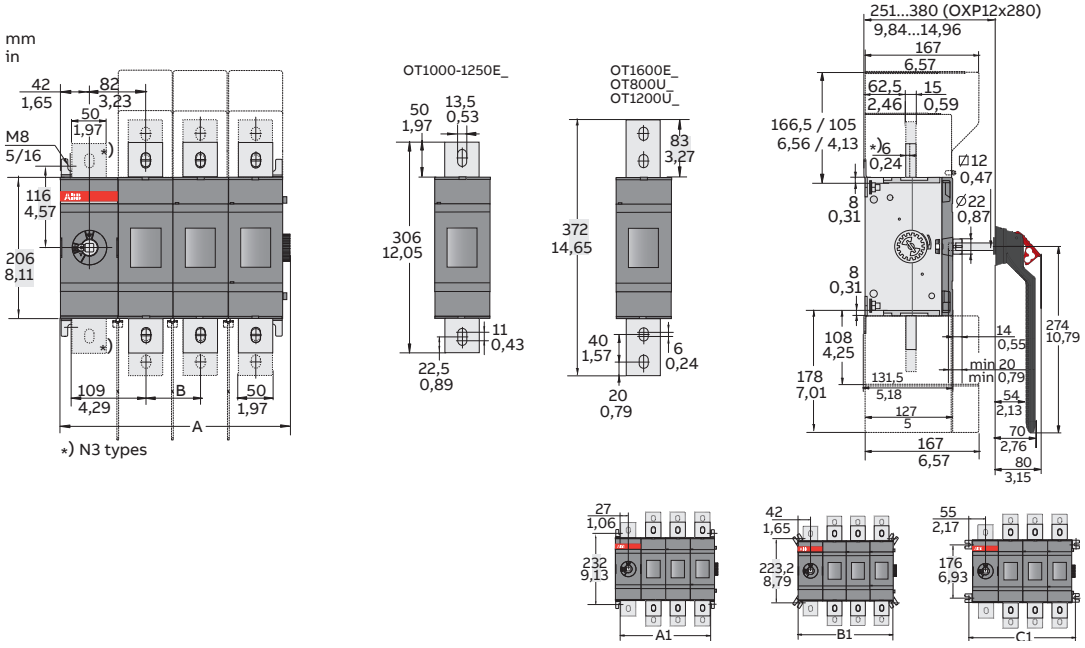

OT1000/1250/1600EP_				
[mm/in]	**01**	**02**	**03**	**04**
A	174,50/6,87	254,50/10,02	334,50/13,17	
B		80/3,15	80/3,15	
A1	134/5,28	214/8,43	294/11,57	374/14,72
B1	164/6,46	244/9,61	324/12,76	404/15,91
C1	190/7,48	270/10,63	350/13,78	430/16,93

M07010_OT1000_1600EP A

Main dimensions mm, inches

Manual switch-disconnectors OT160...4000

Dimensional drawings

Front operated earthing switches OT1000...2500, base mounted, IEC

OT2000...2500EP_

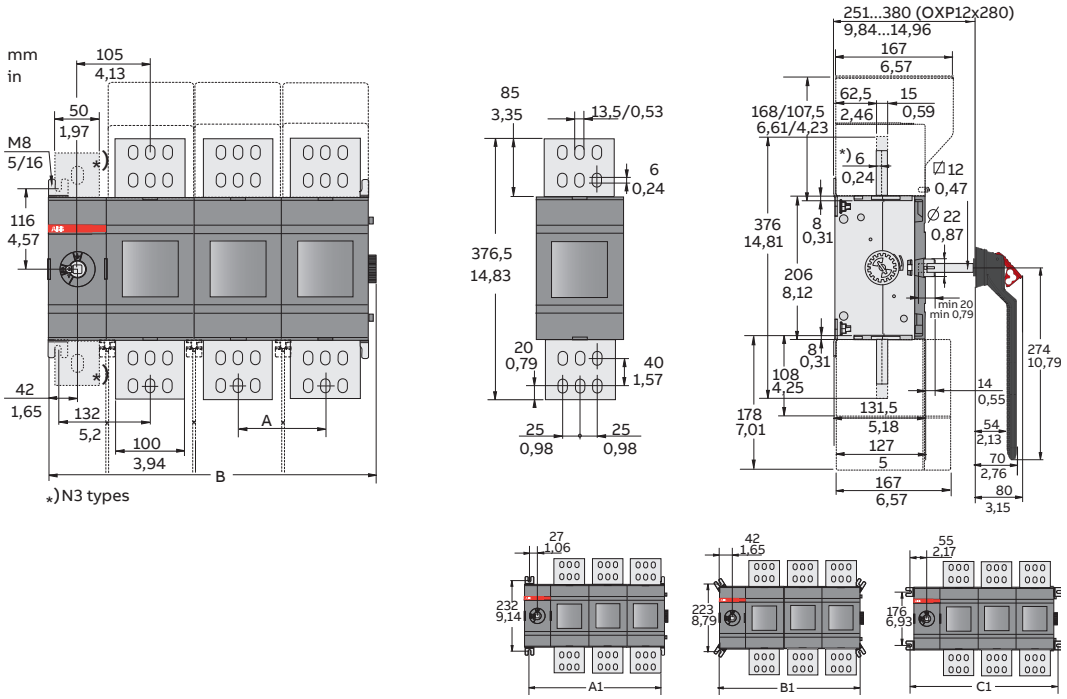

OT2000/2500EP_				
[mm/in]	**01**	**02**	**03**	**04**
A		126/4,96	126/4,96	126/4,96
B	220,5/8,68	346,5/13,64	472,5/18,60	598,5/23,56
A1	180/7,09	306/12,05	432/17,01	558/21,97
B1	210/8,27	336/13,23	462/18,19	588/23,15
C1	236/9,29	362/14,25	488/19,21	614/24,17

M07011_OT2000_2500EP A

Manual switch-disconnectors OT160...4000

Dimensional drawings

Front operated non-fusible disconnect switches OT200...2000, base mounting, UL/CSA

OT200U_

OT200U_				
[mm/in]	U01	U02	U03	U04
A	-	43/1,69	43/1,69	43/1,69
B	83,5/3,24	126,5/4,98	169,5/6,67	212,5/8,37
A1	114/4,49	114/4,49	114/4,49	114/4,49
A2	63/2,48	106/4,17	149/5,87	192/7,56
B1	109,5/4,31	109,5/4,31	109,5/4,31	109,5/4,31
B2	79/3,11	122/4,80	165/6,50	208/8,19
C1	84/3,31	84/3,31	84/3,31	84/3,31
C2	93/3,66	136/5,35	179/7,05	222/8,74

M00009/OT200U01_04 E

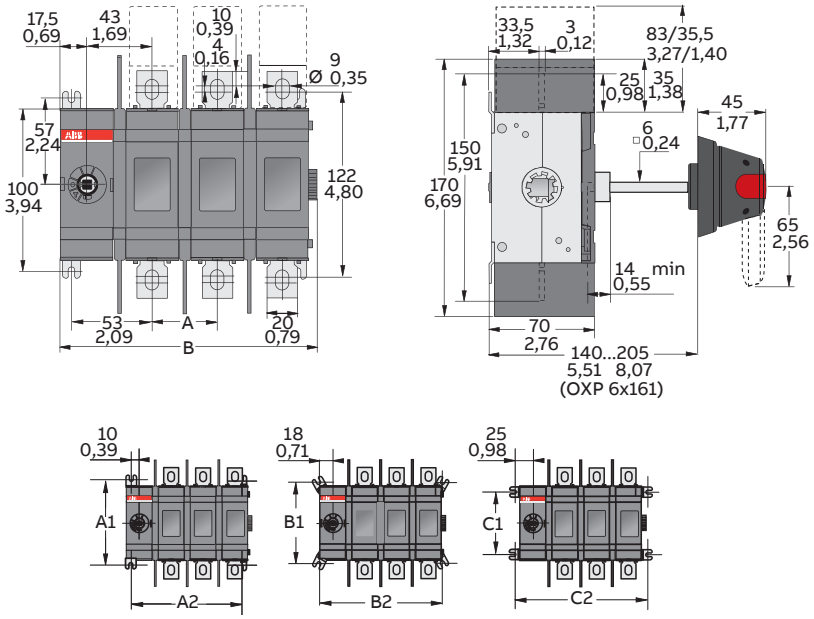

OT200U_				
[mm/in]	U11	U12	U13	U22
A	96/3,78	96/3,78	96/3,78	139/5,47
B	131,5/5,18	174,5/6,87	217,5/8,56	217,5/8,56
A1	114/4,49	114/4,49	114/4,49	114/4,49
A2	106/4,17	149/5,87	192/7,56	192/7,56
A3	53/2,09	53/2,09	53/2,09	96/3,78
B1	109,5/4,31	109,5/4,31	109,5/4,31	109,5/4,31
B2	122/4,80	165/6,50	208/8,19	208/8,19
B3	61/2,40	61/2,40	61/2,40	104/4,09
C1	84/3,31	84/3,31	84/3,31	84/3,31
C2	136/5,35	179/7,05	222/8,74	222/8,74
C3	68/2,68	68/2,68	68/2,68	111/4,37

M00016/OT200U11_22 F

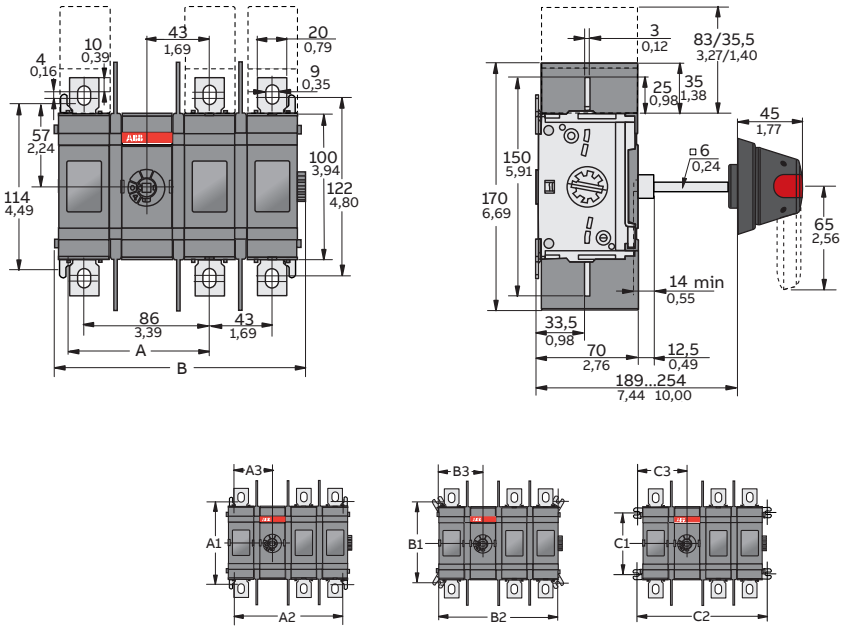

Main dimensions mm, inches

Manual switch-disconnectors OT160...4000

Dimensional drawings

Front operated non-fusible disconnect switches OT200...2000, base mounting, UL/CSA

OT400U_

OT400U_				
[mm/in]	U01	U02	U03	U04
A	-	54/2,13	54/2,13	54/2,13
B	113/4,45	167/6,58	221/8,70	275/10,83
A1	140/5,51	140/5,51	140/5,51	140/5,51
A2	88/3,47	142/5,59	196/7,72	250/9,84
B1	135/5,32	135/5,32	135/5,32	135/5,32
B2	106/4,17	160/4,17	214/8,43	268/10,55
C1	104/4,09	104/4,09	104/4,09	104/4,09
C2	124/4,88	178/7,01	232/9,13	286/11,27

M00019/OT400U01_04 E

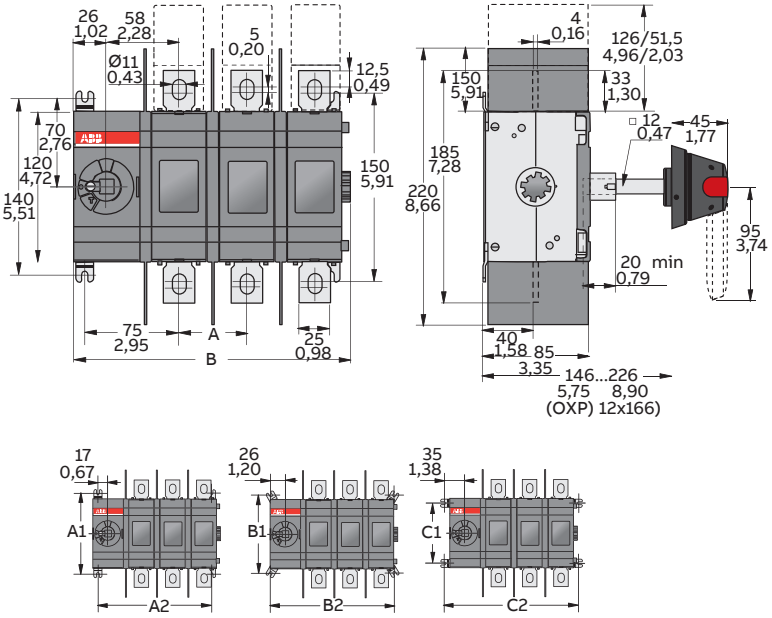

OT400U_				
[mm/in]	U11	U12	U13	U22
A	129/5,08	129/5,08	129/5,08	183/7,21
B	172/6,77	226/8,90	280/11,02	280/11,02
A1	140/5,51	140/5,51	140/5,51	140/5,51
A2	142/5,59	196/7,72	250/9,84	250/9,84
A3	71/2,80	71/2,80	71/2,80	125/4,92
B1	135/5,32	135/5,32	135/5,32	135/5,32
B2	160/6,30	214/8,43	268/10,55	268/10,55
B3	80/3,15	80/3,15	80/3,15	134/5,28
C1	104/4,09	104/4,09	104/4,09	104/4,09
C2	178/7,01	232/9,13	286/11,26	286/11,27
C3	89/3,50	89/3,50	89/3,50	143/5,63

M00020/OT400U11_22 F

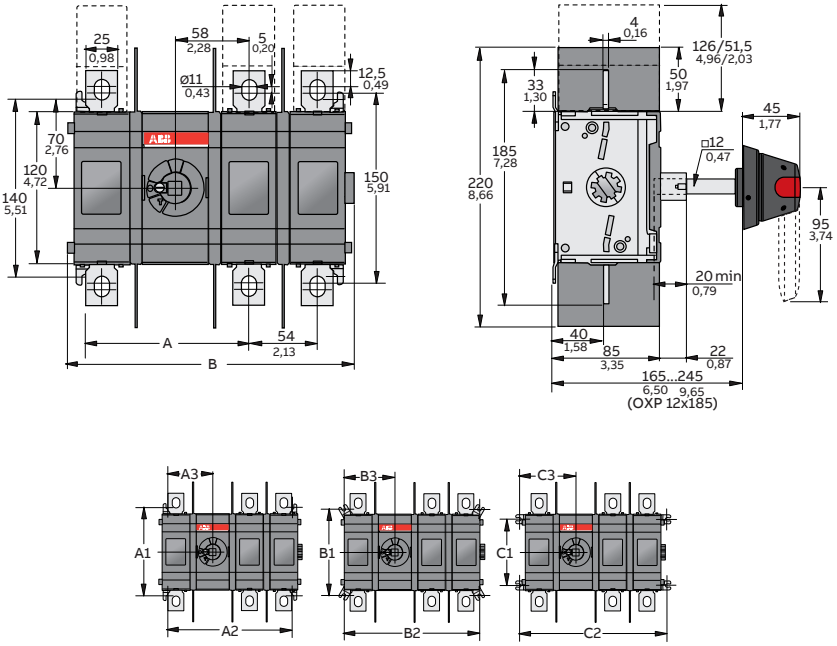

Main dimensions mm, inches

Manual switch-disconnectors OT160...4000

Dimensional drawings

Front operated non-fusible disconnect switches OT200...2000, base mounting, UL/CSA

OT600U_

OT600U_				
[mm/in]	**U01**	**U02**	**U03**	**U04**
A	136/5,35	201/7,91	266/10,47	331/13,03
A1	112/4,41	177/6,97	242/9,53	307/12,09
B1	130/5,12	195/7,68	260/10,24	325/12,80
C1	148/5,83	213/8,39	278/10,95	343/13,50

C00013_/13OT630_800_01_04 B

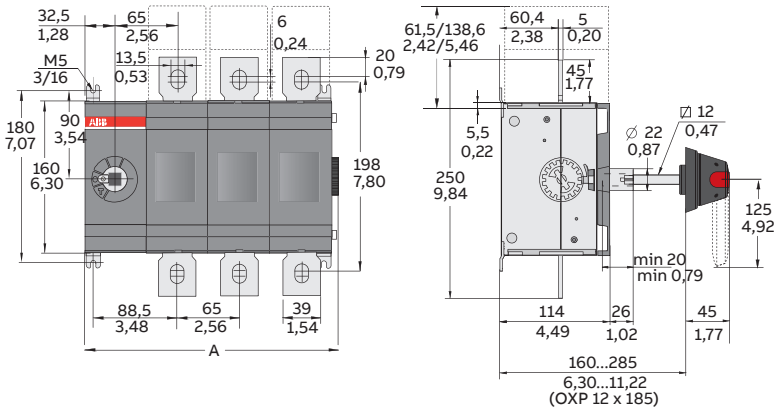

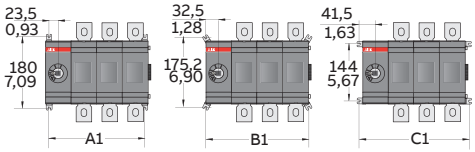

OT600U_				
[mm/in]	**U11**	**U12**	**U13**	**U22**
A	156,3/6.15	156,3/6.15	156,3/6.15	221,3/8.71
B	201,4/7.93	266,4/10.49	331,4/13.05	331,4/13.05

M00527/OT600U_ A

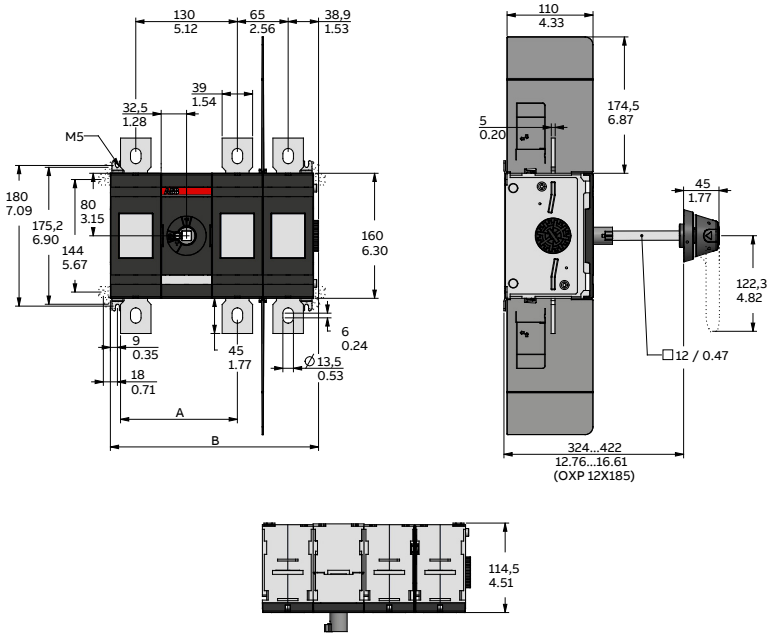

Main dimensions mm, inches

Manual switch-disconnectors OT160...4000

Dimensional drawings

Front operated non-fusible disconnect switches OT200...2000, base mounting, UL/CSA

OT800U_P and OT1200U_P

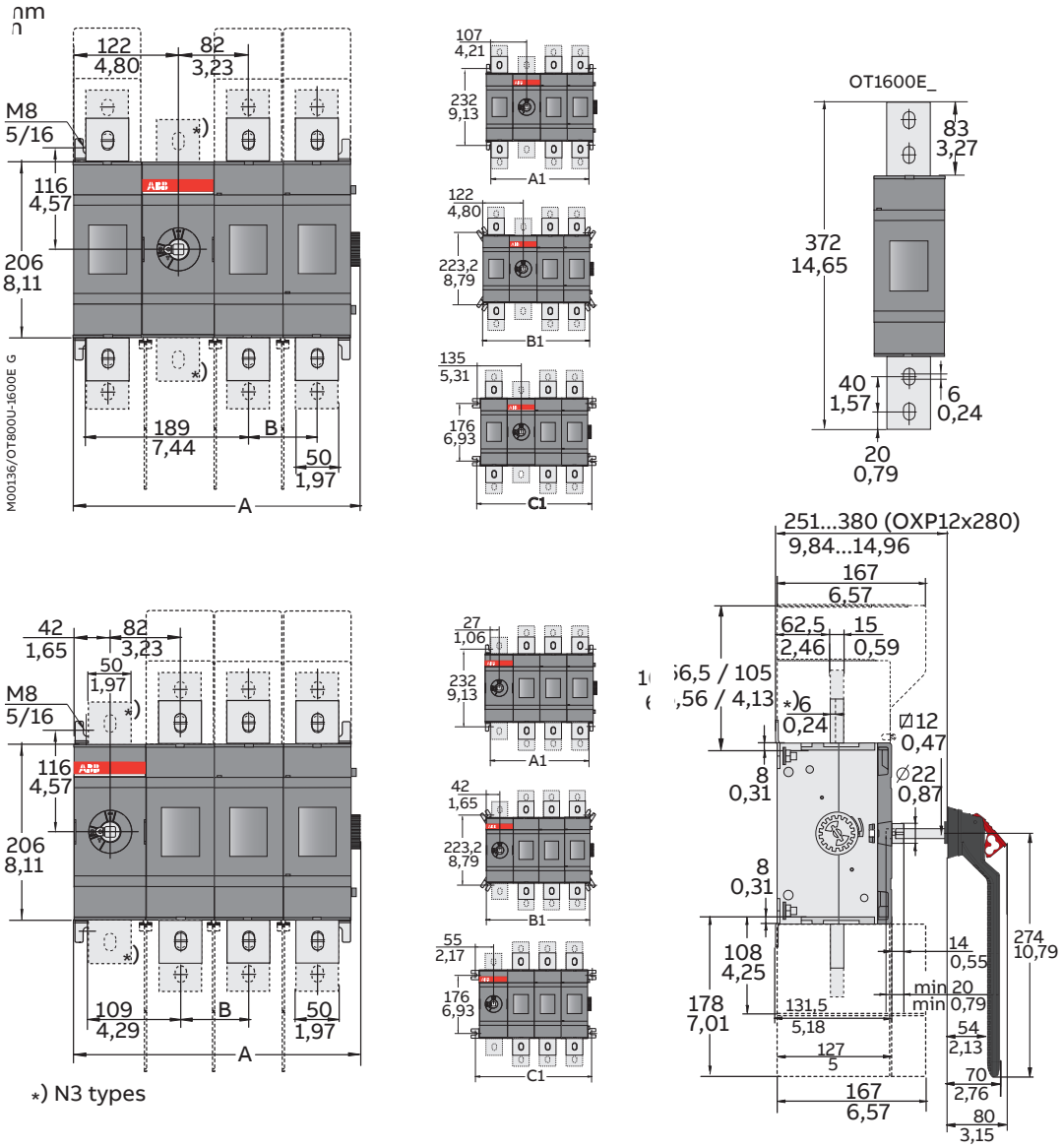

OT800/1200 U_P								
[mm/in]	**01**	**02**	**03**	**04**	**11**	**12**	**13**	**22**
A	174,50/6,87	254,50/10,02	334,50/13,17	414,50/16,32	254,50/10,02	334,50/13,17	414,50/16,32	414,50/16,32
B		80/3,15	80/3,15	80/3,15		80/3,15	80/3,15	80/3,15
A1	134/5,28	214/8,43	294/11,57	374/14,72	214/8,43	294/11,57	374/14,72	374/14,72
B1	164/6,46	244/9,61	324/12,76	404/15,91	244/9,61	324/12,76	404/15,91	404/15,91
C1	190/7,48	270/10,63	350/13,78	430/16,93	270/10,63	350/13,78	430/16,93	430/16,93

M00135/OT800U-1600E G

Main dimensions mm, inches

Manual switch-disconnectors OT160...4000

Dimensional drawings

Front operated non-fusible disconnect switches OT200...2000, base mounting, UL/CSA

OT1600...2000U

Mechanism between the poles

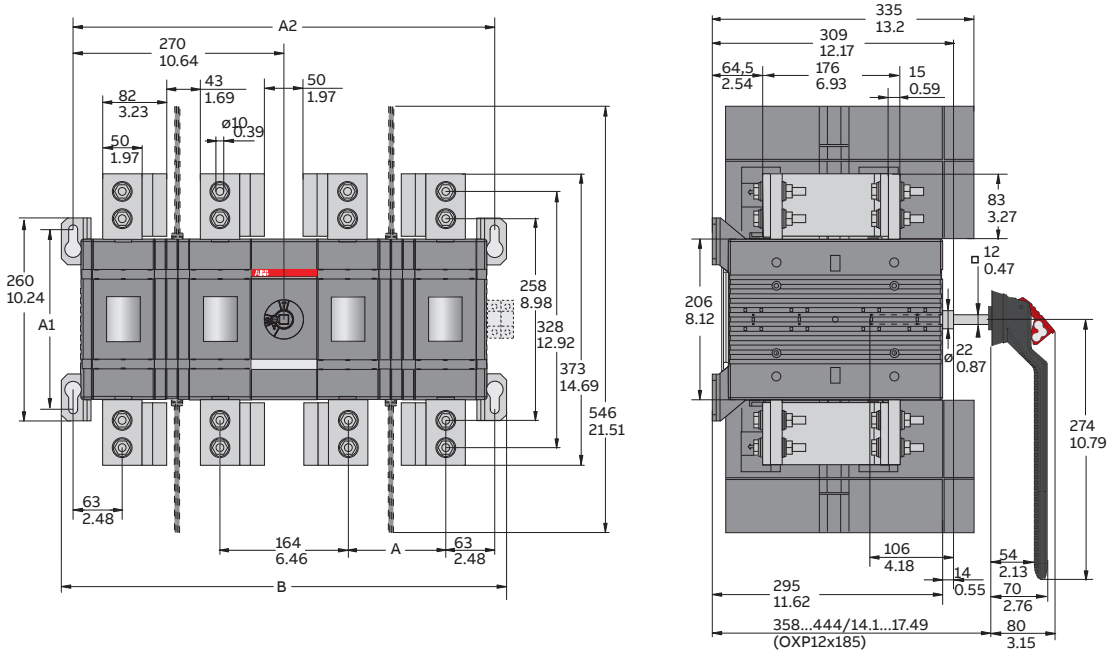

OT 1600-2000U_			
[mm/in]	12	13	22
A	125/4.92	125/4.92	125/4.92
A1	230/9.06	230/9.06	230/9.06
A2	415/16.35	540/21.27	540/21.27
B	445/17.53	570/22.46	570/22.46

M00496/OT2000U12-22 A

Main dimensions mm, inches

Manual switch-disconnectors OT160...4000

Dimensional drawings

Front operated non-fusible disconnect switches OT200...2000, base mounting, UL/CSA

OT1600...2000U

Mechanism at the end of the switch

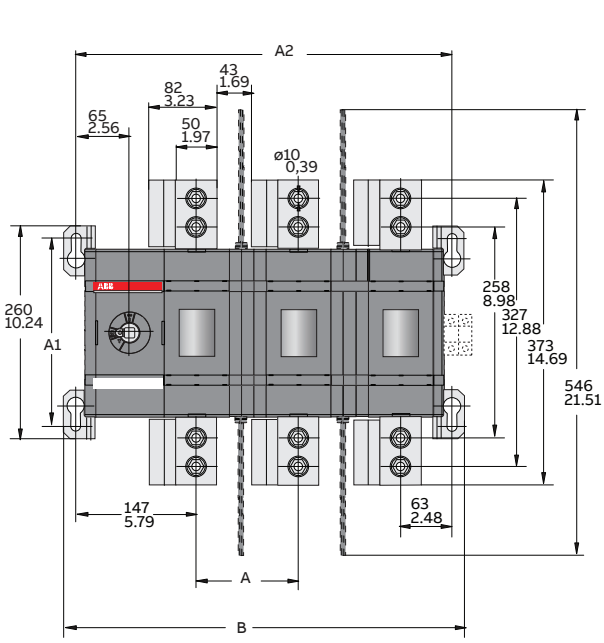

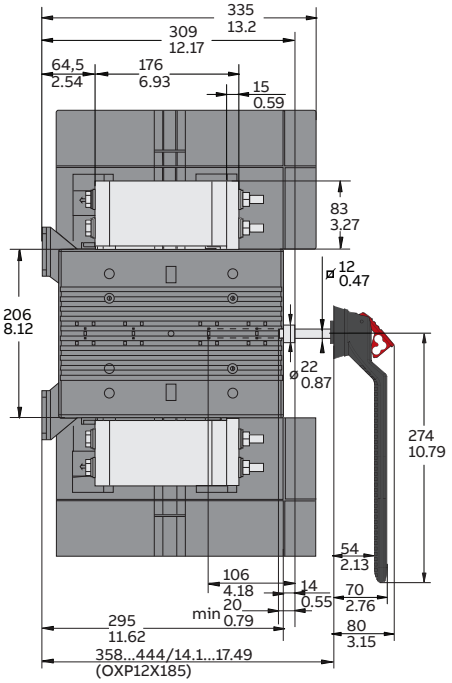

OT 1600-2000U_			
[mm/in]	**02**	**03**	**04**
A	125/4.92	125/4.92	125/4.92
A1	230/9.06	230/9.06	230/9.06
A2	335/13.2	460/18.12	585/23.05
B	365/14.38	490/19.3	615/24.23

Main dimensions mm, inches

Manual switch-disconnectors OT160...4000

Dimensional drawings

Front operated 6-and 8-pole non-fusible disconnect switches OT200...800U_DP

OT200U_DP

Mechanism at the end of the switch

OT200U03-04DDP

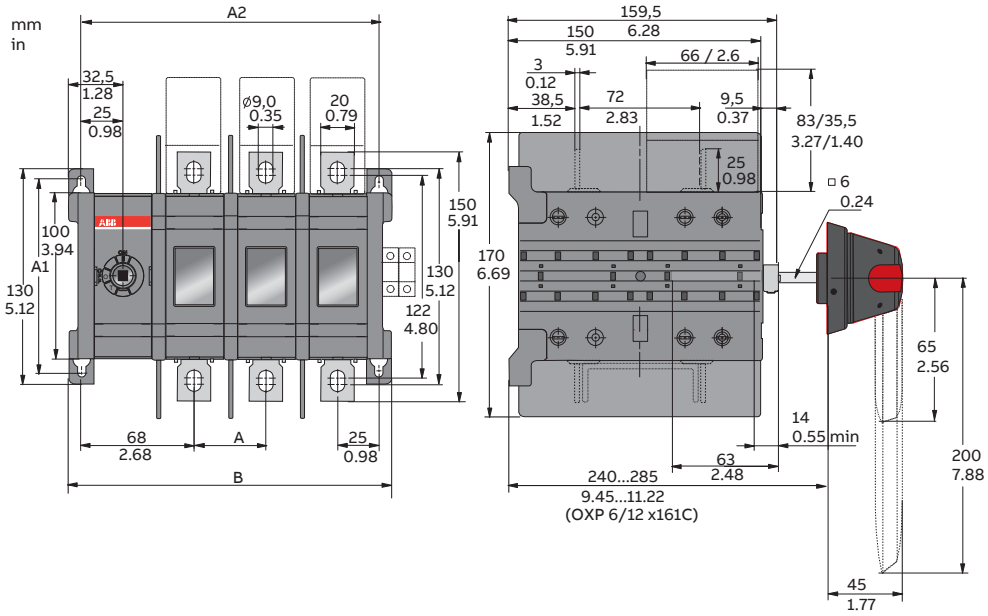

OT200_D_		
	U03	**U04**
A	43 / 1.69	43 / 1.69
A1	116 / 4.57	116 / 4.57
A2	179 / 7.05	222 / 8.74
B	194 / 7.64	237 / 9.33

OT400U_DP

Mechanism at the end of the switch

OT400U03-04DDP_

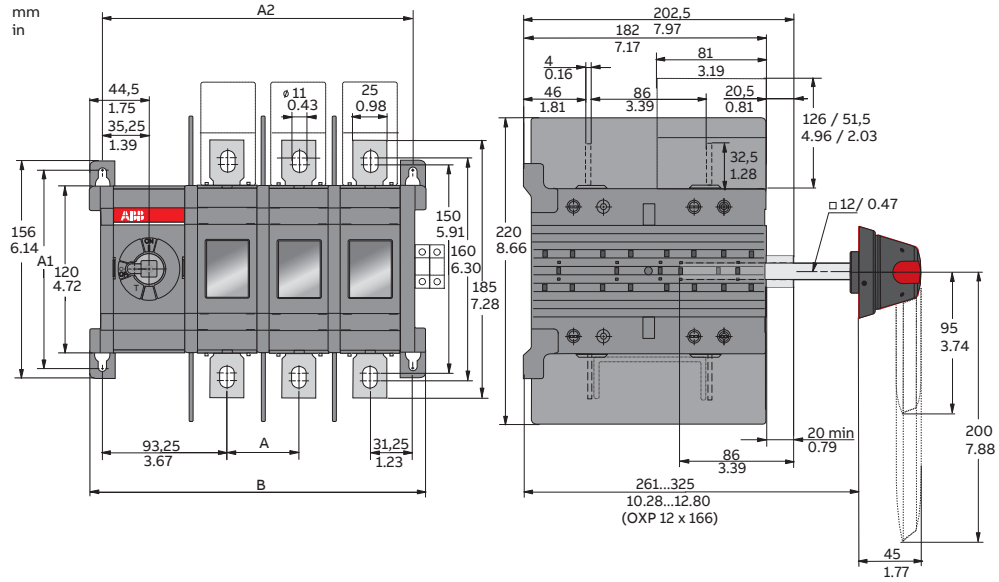

OT400_D_		
	U03	**U04**
A	54 / 2.13	54 / 2.13
A1	142 / 5.59	142 / 5.59
A2	232,5 / 9.15	286,5 / 11.28
B	251 / 9.88	305 / 12.01

Main dimensions mm, inches

Manual switch-disconnectors OT160...4000

Dimensional drawings

OT600U_DP

Mechanism at the end of the switch

OT600U03-04DDP

OT600_D_		
	U03	**U04**
A	65 / 2.56	65 / 2.56
A1	180 / 7.09	180 / 7.09
A2	290 / 11.42	355 / 13.98
B	311 / 12.24	376 / 14.90

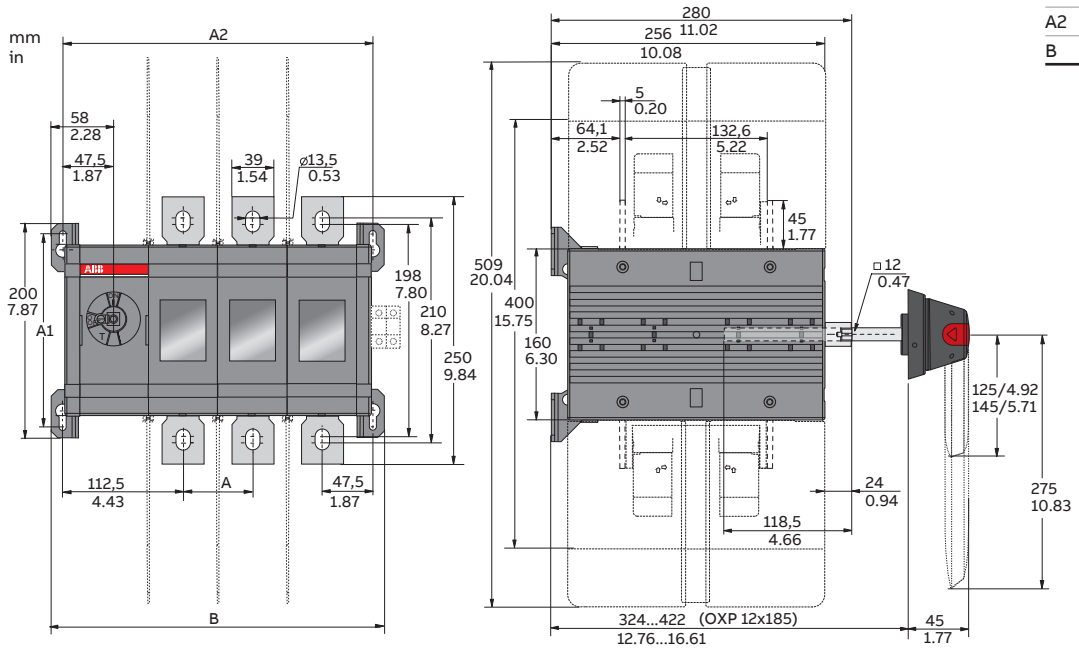

Main dimensions mm, inches

Manual switch-disconnectors OT160...4000

Dimensional drawings

OT200US
Without handle

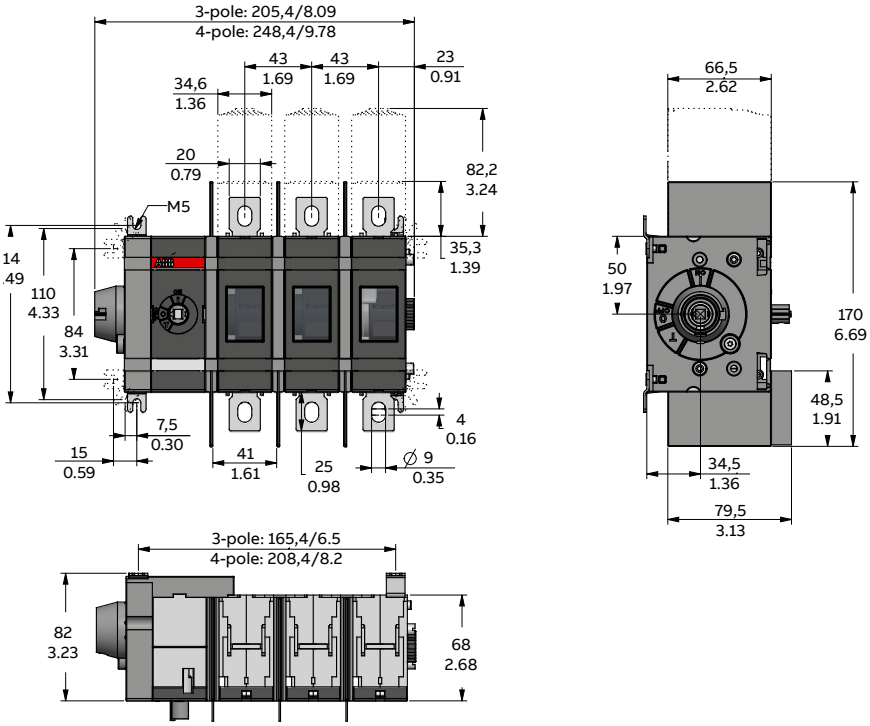

OT200US
With direct mount handle

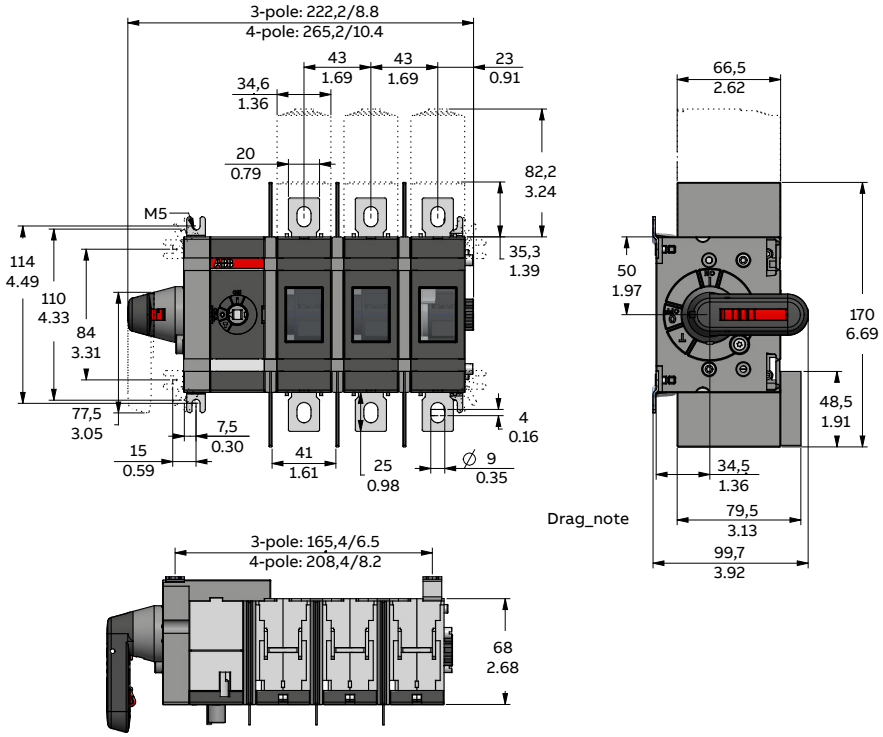

Main dimensions mm, inches

Manual switch-disconnectors OT160...4000

Dimensional drawings

OT400US

Without handle

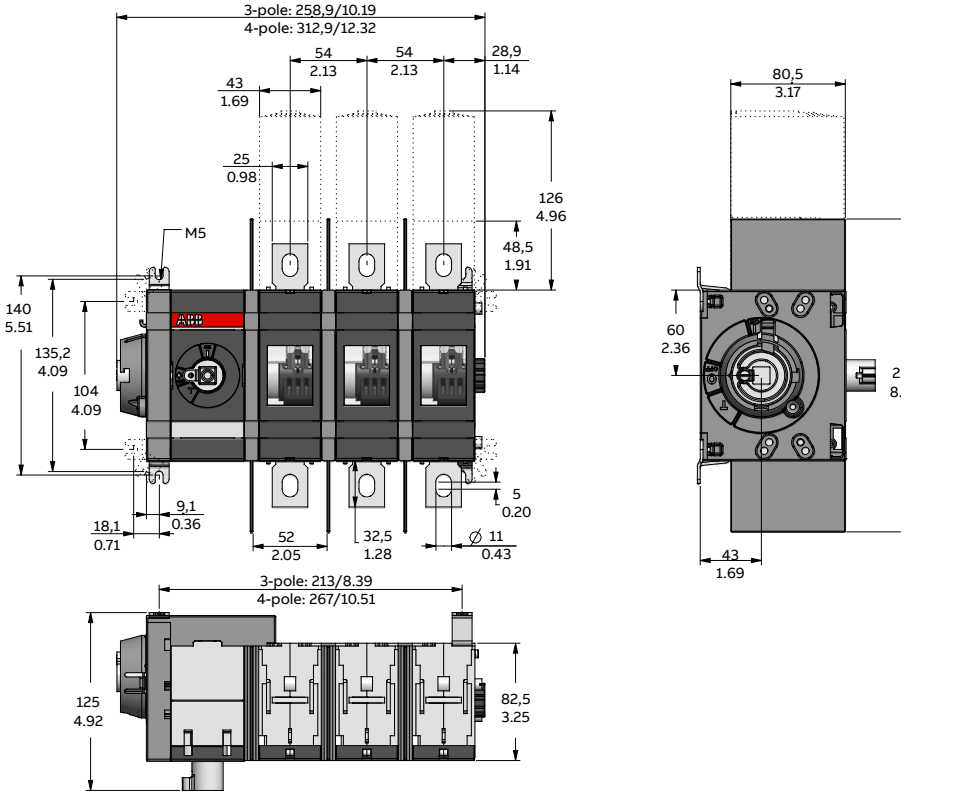

OT400US

With direct mount handle

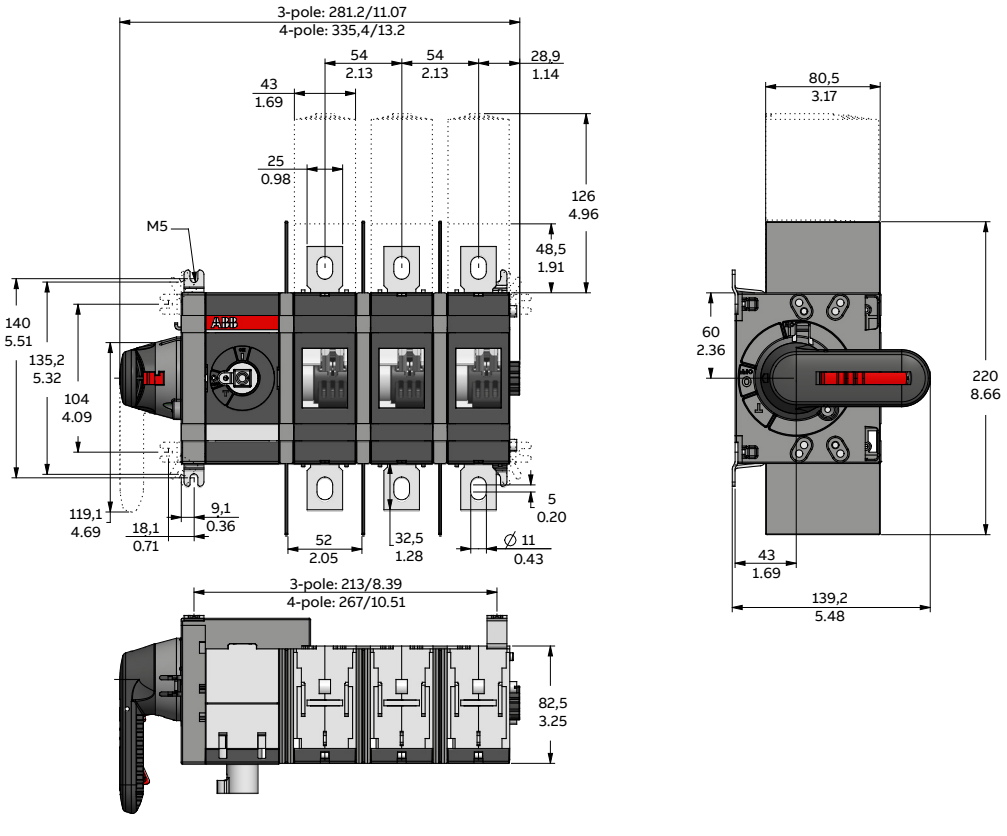

Main dimensions mm, inches

Manual switch-disconnectors OT160...4000

Dimensional drawings

OT600US
Without handle

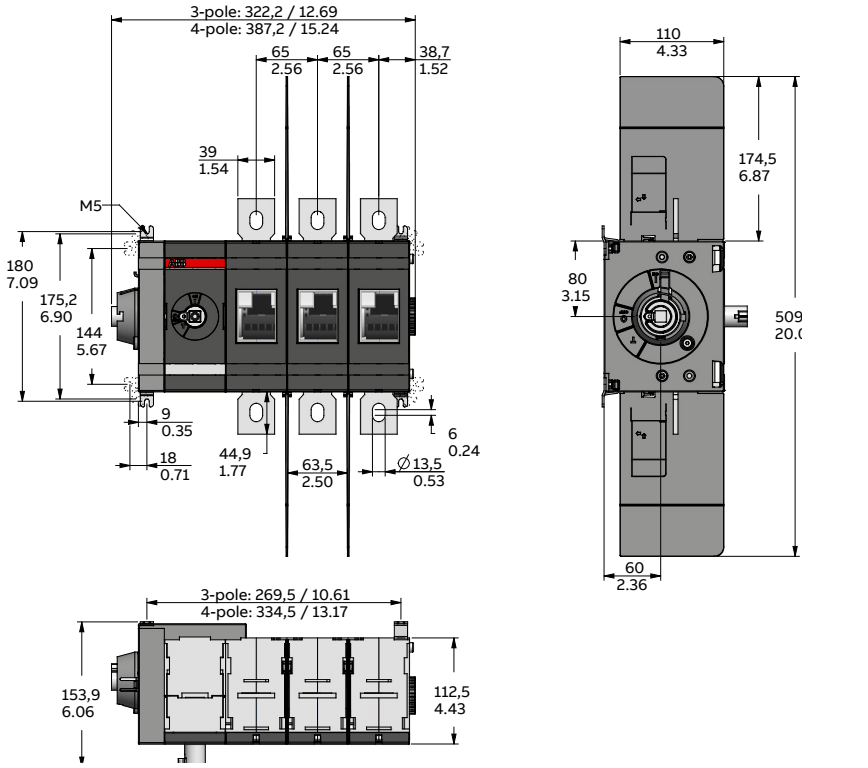

OT600US
With direct mount handle

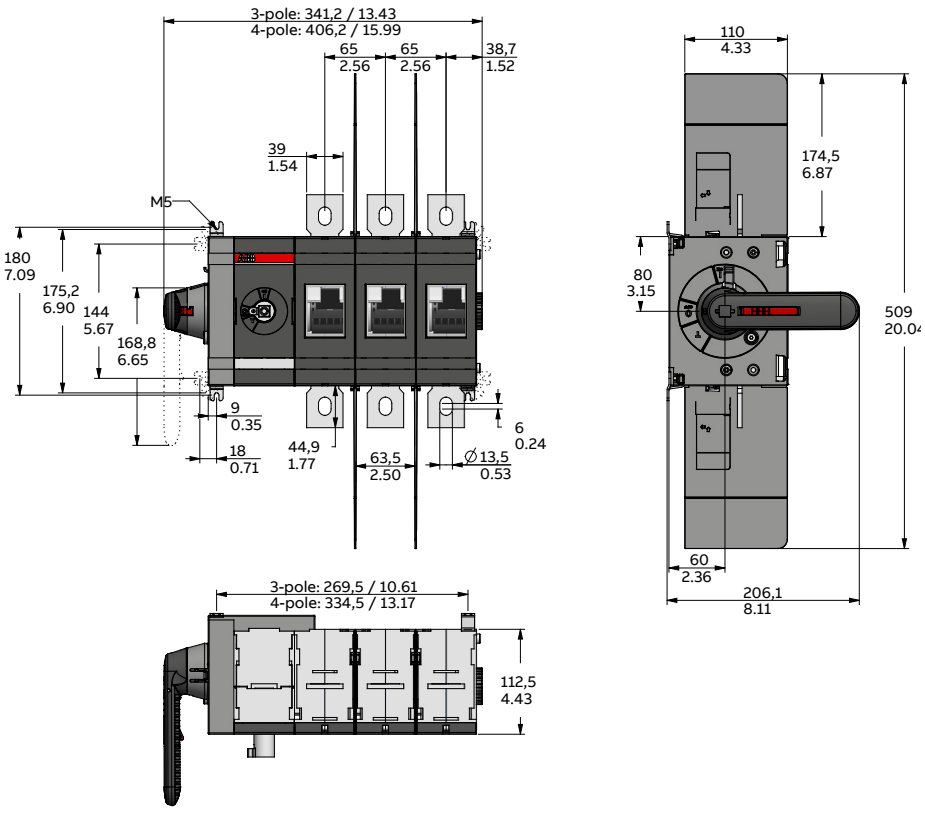

Main dimensions mm, inches



Accessories for manual switch-disconnectors OT160...4000

Ordering information for handles



OHY_



OHB_



OHG125J12

Pistol handles for base and DIN-rail mounted switches

IP65, NEMA 1, 3R, 12, padlockable with three padlocks in OFF-position, door interlock in ON-position. Screw fixing from the back side of the handle. No screws on the front ensures double insulation.

Suitable for switches	Colour	Handle length mm	Indication	Type	Order code	Weight/ unit kg
Suitable for shaft diameter 6 mm						
OT160EV...250E, OT200U	Black	65	I-0, ON-OFF	OHB65J6	1SCA022380R9660	0.12
	Black	65	I-0, ON-OFF	OHB65J6E20	1SCA022459R4220	0.12
	Red-yellow	65	I-0, ON-OFF	OHY65J6	1SCA022380R9820	0.12
	Red-yellow	65	I-0, ON-OFF	OHY65J6E20	1SCA022501R4700	0.12
	Grey	65	I-0	OHG65J6	1SCA022380R9740	0.12
	Black	80	I-0, ON-OFF	OHB80J6	1SCA022381R0240	0.14
	Red-yellow	80	I-0, ON-OFF	OHY80J6	1SCA022381R0410	0.14
	Grey	80	I-0	OHG80J6	1SCA022381R0320	0.14
	Black	65	Test-OFF-ON/ Test-0-I	OHB65J6T	1SCA022399R8110	0.12
	Red-yellow	65	Test-OFF-ON/ Test-0-I	OHY65J6T	1SCA022456R9540	0.12
Suitable for shaft diameter 12 mm						
OT315...400E, OT400U	Black	95	I-0, ON-OFF	OHB95J12	1SCA022381R0830	0.16
	Black	95	I-0, ON-OFF	OHB95J12E20	1SCA022833R3750	0.16
	Red-yellow	95	I-0, ON-OFF	OHY95J12	1SCA022381R1050	0.16
	Grey	95	I-0	OHG95J12	1SCA022381R0910	0.16
	Black	95	Test-OFF-ON/ Test-0-I	OHB95J12T	1SCA022736R1750	0.16
	Red-yellow	95	Test-OFF-ON/ Test-0-I	OHY95J12T	1SCA022736R1910	0.16
OT630...800E, OT600U	Black	125	I-0, ON-OFF	OHB125J12	1SCA022381R1560	0.17
	Black	125	I-0, ON-OFF	OHB125J12E20	1SCA022382R9770	0.17
	Red-yellow	125	I-0, ON-OFF	OHY125J12	1SCA022381R1720	0.17
	Red-yellow	125	I-0, ON-OFF	OHY125J12E20	1SCA022501R5000	0.17
	Grey	125	I-0	OHG125J12	1SCA022381R1640	0.17
	Black	145	I-0, ON-OFF	OHB145J12	1SCA022381R2110	0.17
	Red-yellow	145	I-0, ON-OFF	OHY145J12	1SCA022381R2370	0.17
	Grey	145	I-0	OHG145J12	1SCA022381R2290	0.17
	Black	125	Test-OFF-ON/ Test-0-I	OHB125J12T	1SCA022652R2220	0.17

- Door interlocking in ON-position means that the door can not be opened, when the handle is in ON-position. The door interlocking can be defeated in IP65 types to allow authorized personnel access for inspection. The door is interlocked when the non-defeatable handle is padlocked.
- Consult us for NEMA4/4X versions.
- E20 Handles padlockable in ON and OFF-positions.

Accessories for manual switch-disconnectors OT160...4000

Ordering information for handles



OHB150/200J12P



OHB274/330J12



OHY200J12P



OHY175J12

Pistol handles

Padlockable with three padlocks in OFF-position, door interlock in ON-position. Screw fixing from the back side of the handle. No screws on the front ensures double insulation.

Suitable for switches	Colour	Handle length mm	Indication	Type	Order code	Weight/ unit kg
Suitable for shaft diameter 12 mm						
IP65, NEMA 1, 3R, 12, double grip						
OT1000...2500E, OT800...1200U	Black	2x150	I-0, ON-OFF	OHB150J12P	1SCA022865R9430	0.17
	Black	2x150	I-0, ON-OFF	OHB150J12PE20	1SCA157054R1001	0.17
	Red-yellow	2x150	I-0, ON-OFF	OHY150J12P	1SCA101586R1001	0.17
	Black	2x200	I-0, ON-OFF	OHB200J12P	1SCA022865R9510	0.40
	Black	2x200	I-0, ON-OFF	OHB200J12PE20	1SCA106288R1001	0.40
	Red-yellow	2x200	I-0, ON-OFF	OHY200J12P	1SCA101587R1001	0.40
	Black	2x200	Test-OFF-ON/ Test-0-I	OHB200J12PT	1SCA106510R1001	0.40
	Red-yellow	2x200	Test-OFF-ON/ Test-0-I	OHY200J12PT	1SCA111512R1001	0.04
NEMA 4X, double grip						
OT1000...2500E, OT800...1200U	Black	2x200	I-0, ON-OFF	OHB200L12P	1SCA111564R1001	0.40
P65, NEMA 1, 3R, 12						
OT1000... 4000E, OT800...2000U	Black	274	I-0, ON-OFF	OHB274J12	1SCA115920R1001	0.54
	Black	274	I-0, ON-OFF	OHB274J12PE20	1SCA120919R1001	0.54
	Red-yellow	274	I-0, ON-OFF	OHY274J12	1SCA115919R1001	0.54
	Black	330	I-0, ON-OFF	OHB330J12	1SCA115922R1001	0.58
	Red-yellow	330	I-0, ON-OFF	OHY330J12	1SCA115921R1001	0.58
	Black	274	Test-OFF-ON/ Test-0-I	OHB274J12T	1SCA120250R1001	0.54
	Black	330	Test-OFF-ON/ Test-0-I	OHB330J12T	1SCA120252R1001	0.58

- Door interlocking in ON-position means that the door can not be opened, when the handle is in ON-position.
  The door interlocking can be defeated in IP65 types to allow authorized personnel access for inspection.
  The door is interlocked when the non-defeatable handle is padlocked.
- NEMA 4, 4x pistol handles available on request.
- E20 Handles padlockable in ON and OFF-positions.



OHM65L6



OHM200L12P

Stainless steel pistol handles

IP66 (NEMA 4X). Material: AISI 316. Padlockable with 3 padlocks in the OFF-position, door interlock in the ON-position.

Colour	Handle length mm	Indication	Type	Order code	Weight/ unit kg
Suitable for shaft diameter 6 mm					
Grey	65	I-O/ON-OFF	OHM65L6	1SCA022739R1070	0.73
Suitable for shaft diameter 12 mm					
Grey	125	I-O/ON-OFF	OHM125L12	1SCA022739R1150	0.76
Grey	175	I-O/ON-OFF	OHM175L12	1SCA022739R1230	0.83
Grey	275	I-O/ON-OFF	OHM275L12	1SCA022832R4840	0.96
Grey	2x200	I-O/ON-OFF	OHM200L12P	1SCA104439R1001	2.00

-Door interlocking in ON-position means that the door can not be opened, when the handle is in ON-position.
The door interlocking can be defeated in IP65 types to allow authorized personnel access for inspection.
The door is interlocked when the non-defeatable handle is padlocked.

Accessories for manual switch-disconnectors OT160...4000

Ordering information for handles



OTV400EK



OTV1000EK



OTVY400EK



OTV1000EPK

Direct mount handles

Includes a shaft and a mechanism cover. Indication Test-OFF-ON/Test-O-I. Padlockable with three padlocks in OFF-position.

Suitable for switches	Colour	Handle length mm	Type	Order code	Weight/ unit kg
OT160EV...250E, OT200U	Black	65	OTV250EK	1SCA022763R2700	0.10
	Red-yellow	65	OTVY250EK	1SCA022772R7910	0.10
OT315...400E, OT400U	Black	95	OTV400EK	1SCA022763R2960	0.20
	Red-yellow	95	OTVY400EK	1SCA022772R7830	0.20
OT630...800E, OT600U	Black	145	OTV800EK	1SCA022804R6340	0.30
	Red-yellow	145	OTVY800EK	1SCA022810R2780	0.30
OT1000...2500, OT800...2000U	Black	274	OTV1000EK	1SCA106608R1001	0.75
OT1000...2500, OT800...2000U	Black	2x200	OTV1000EPK	1SCA121085R1001	0.90
OT3200...4000	Black	274	OTV3200EK	1SCA144572R1001	0.75

OTV1000EK dimensions

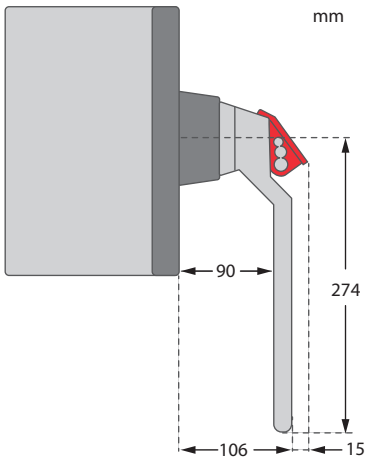

Accessories for manual switch-disconnectors OT160...4000

Dimensional drawings for handles



OHB65J6E00S



OHY65J6E00S

Handles for side operated switch-disconnectors

IP65, Nema type 1, 3R, 12. Plastic handles. For mounting on the side of the enclosure. Padlockable with three padlocks in the OFF-position, door interlock in the ON-position when the handle is mounted on the door. The position indications are rotated 90°.

Colour	Handle length mm	Indication	Type	Order code	Weight/ unit kg
Suitable for shaft diameter 6 mm					
Black	65	I-O/ON-OFF	OHB65J6E00S	1SCA022382R9850	0.12
Red-yellow	65	I-O/ON-OFF	OHY65J6E00S	1SCA022382R9930	0.12
Grey	65	I-O	OHG65J6E00S	1SCA022383R4510	0.12
Black	65	Test/I-O/ON-OFF	OHB65J6TE00S	1SCA109016R1001	0.12
Red-yellow	65	Test/I-O/ON-OFF	OHY65J6TE00S	1SCA022688R0140	0.12
Grey	65	Test/I-O	OHG65J6TE00S	1SCA109014R1001	0.12
Suitable for shaft diameter 12 mm					
Black	145	I-O/ON-OFF	OHB145J12E00S	1SCA022679R9700	0.17

- Door interlocking in ON-position means that the door on which the handle is mounted can not be opened, when the handle is in ON-position.The door interlocking can be defeated to allow authorized personnel access for inspection. The door is interlocked when the non-defeatable handle is padlocked.



OHBZX200



OHBZX275

Handle extension

Snap-on extension handle to ease the operation of 6- and 8-pole switches

Suitablefor switches	Colour	Handle length mm	For handle type	Type	Order number	Weight/ unit kg
OT160E...250E_D/DD, OT200U_D	Black	125	OTV_	OHBZV125	1SCA125962R1001	0.05
OT160E...400E_D/DD, OT200U_D	Black	200	OTV_, OHB_	OHBZX200	1SCA125960R1001	0.13
OT630...800E_D/DD, OT600U_D	Black	275	OTV_, OHB_	OHBZX275	1SCA125963R1001	0.18

Accessories for manual switch-disconnectors OT160...4000

Dimensional drawings for pistol handles

Minimum distance L between the hinge and the rotating shaft

Sizes	Length L	Length L	Handle type
A	mm	in	
OT160...250_P	60	2.36	OH_65J_
OT315...400_P	95	3.74	OH_95J_
OT630...800_P	150	5.91	OH_125J_
OT1000...4000_P	274	10.79	OH_274J_
OT1000...4000_P	330	12.99	OH_330J_

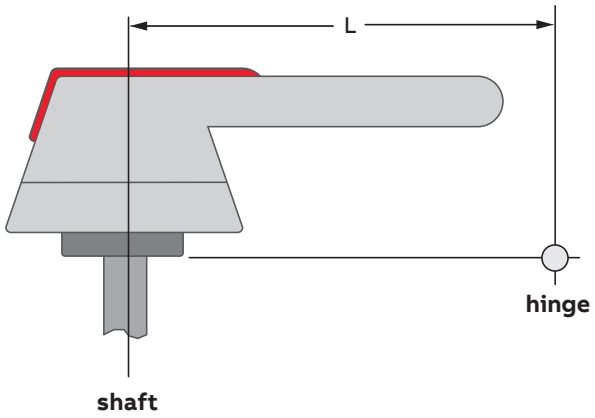

Plastic handles, type OH

Handle type	Shaft diameter B	Length L	Length L
		mm	in
OH_65J6	6	65	2.56
OH_80J6	6	80	3.15
OH_95J12	12	95	3.74
OH_125J12	12	125	4.92
OH_145J12	12	145	5.71
OH_175J12	12	175	6.89
OH_275J12	12	275	10.83

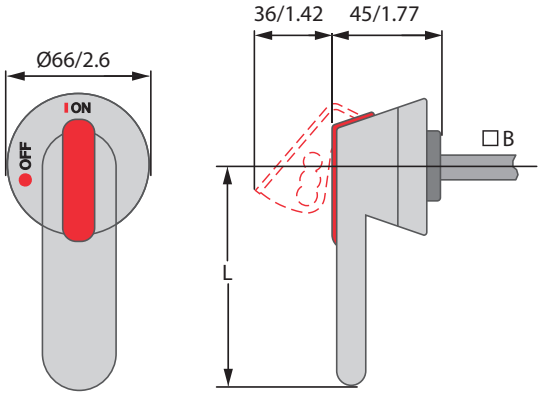

Door drilling for OH_ handles:

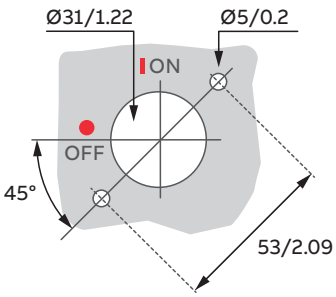

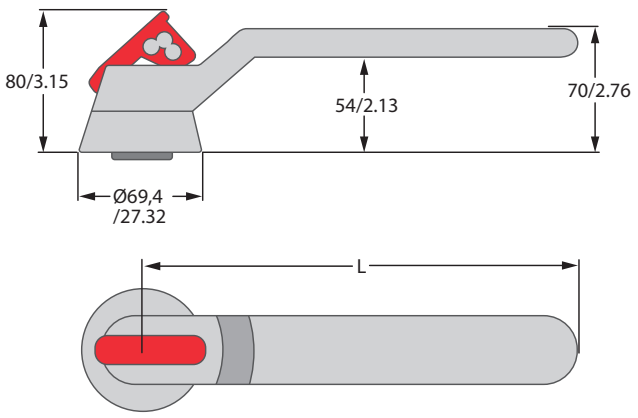

Handle type	Length L	Length L
	mm	in
OH_274J12	274	10.79
OH_330J12	330	12.99

Main dimensions mm, inches

Accessories for manual switch-disconnectors OT160...4000

Dimensional drawings for pistol handles

Plastic handles, type OHB

Handle type	Length L	Length L
	mm	in
OHB150J12P	300	11.81
OHB200J12P	400	15.75

Door drilling for OHB_ handles:

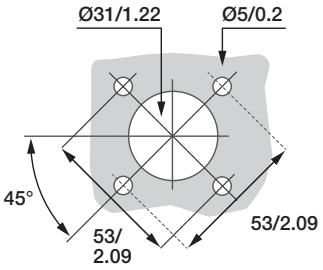

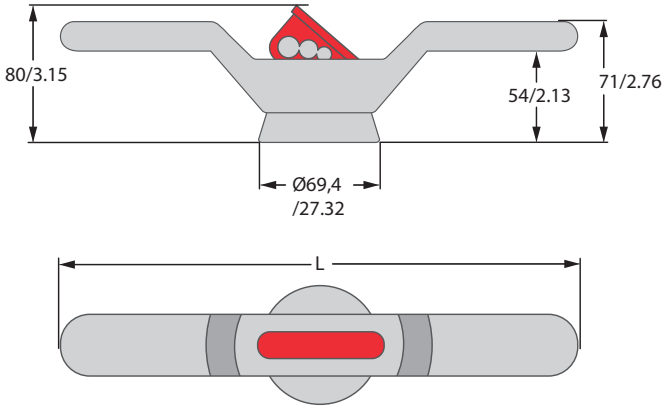

Stainless steel handles

Handle type	Shaft diameter B	Length L	Length L
mm		mm	in
OHM65L6	6	65	2.56
OHM125L12	12	125	4.92
OHM175L12	12	175	6.89
OHM275L12	12	275	10.83

Door drilling for OHM_ handles:

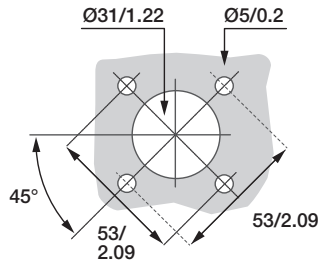

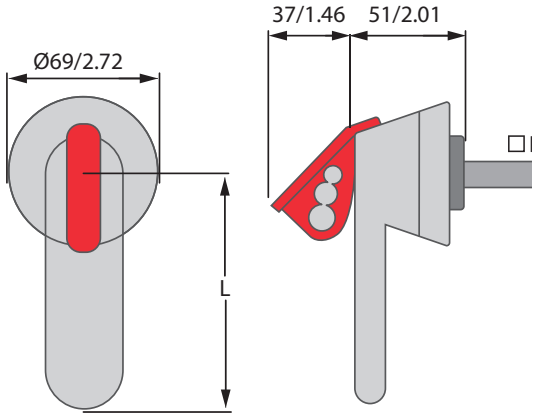

Main dimensions mm, inches

Accessories for manual switch-disconnectors OT160...4000

Ordering information for shafts



OXP6X_

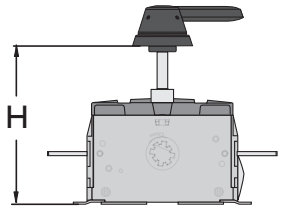

OXP_X_

Shafts for pistol handles

For switches	Shaft length mm	Mounting depth H mm	Type	Order code	Weight/ unit kg
Shaft diameter 6 mm					
OT160EV...250E, OT200U [1]	130	109...174	OXP6X130	1SCA022057R0570	0.04
	150	129...194	OXP6X150	1SCA022295R5600	0.05
	161	140...205	OXP6X161	1SCA022067R1760	0.05
	210	189...254	OXP6X210	1SCA022295R6080	0.06
	290	269...334	OXP6X290	1SCA022042R6370	0.08
Shaft diameter 12 mm					
OT315...400E, OT400U	166	146...226	OXP12X166	1SCA022325R7100	0.20
	185	165...245	OXP12X185	1SCA022325R6710	0.20
	250	230...310	OXP12X250	1SCA022325R6980	0.28
	280	260...340	OXP12X280	1SCA022137R5140	0.30
	325	305...385	OXP12X325	1SCA022042R5810	0.36
	395	375...455	OXP12X395	1SCA022042R5990	0.43
	465	445...525	OXP12X465	1SCA022042R6020	0.51
	535	515...595	OXP12X535	1SCA022042R6110	0.59
Shaft diameter 12 mm					
OT630...800E, OT600U	185	165...245	OXP12X185	1SCA022325R6710	0.20
	250	230...345	OXP12X250	1SCA022325R6980	0.28
	280	260...375	OXP12X280	1SCA022137R5140	0.30
	325	305...420	OXP12X325	1SCA022042R5810	0.36
	395	375...490	OXP12X395	1SCA022042R5990	0.43
	465	445...560	OXP12X465	1SCA022042R6020	0.51
	535	515...630	OXP12X535	1SCA022042R6110	0.59
Shaft diameter 12 mm					
OT1000...2500E, OT800...1200U [1]	250	221...350	OXP12X250	1SCA022325R6980	0.28
	280	251...380	OXP12X280	1SCA022137R5140	0.30
	325	296...425	OXP12X325	1SCA022042R5810	0.36
	395	366...495	OXP12X395	1SCA022042R5990	0.43
	465	436...565	OXP12X465	1SCA022042R6020	0.51
	535	506...635	OXP12X535	1SCA022042R6110	0.59
Shaft diameter 12 mm					
OT3200...4000E, OT1600...200U	280	251...380	OXP12X280	1SCA022137R5140	0.30
	325	296...425	OXP12X325	1SCA022042R5810	0.36
	395	366...495	OXP12X395	1SCA022042R5990	0.43
	465	436...565	OXP12X465	1SCA022042R6020	0.51
	535	506...635	OXP12X535	1SCA022042R6110	0.59

[1] Longer shafts on request
[1] Wide versions OT1000-2500W_: with shafts over 280 mm, shaft tube OXT20X210X must be used, see page 129.

Accessories for manual switch-disconnectors OT160...4000

Ordering information for shafts



OXP6X_-45



OXP12X_-45

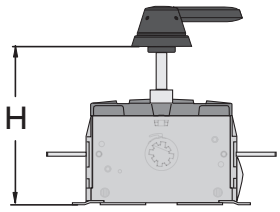

OXP_X_

Twisted shafts for pistol handles

Twisted shafts for pistol handles. Shaft is rotated 45 degrees.

For switches	Shaft length mm	Mounting depth H mm	Type	Order code	Weight/ unit kg
Shaft diameter 6 mm					
OT160EV...250E, OT200U	130	109...174	OXP6X130-45	1SCA022355R9110	0.04
	150	129...194	OXP6X150-45	1SCA022294R4400	0.05
	210	189...254	OXP6X210-45	1SCA022294R4230	0.06
	290	269...334	OXP6X290-45	1SCA022304R4290	0.08
Shaft diameter 12 mm					
OT315...800E, OT400...600U	250	230...310	OXP12X250-45	1SCA022293R9400	0.28
	280	260...340	OXP12X280-45	1SCA022382R0800	0.30
	325	305...385	OXP12X325-45	1SCA022304R4450	0.36
	395	445...525	OXP12X395-45	1SCA022749R0640	0.43
	465	439...519	OXP12X465-45	1SCA022423R1770	0.51
	535	515...595	OXP12X535-45	1SCA022723R2940	0.59
Shaft diameter 12 mm					
OT1000...2500E, OT800...1200U	250	226...355	OXP12X250-45	1SCA022293R9400	0.28
	280	256...385	OXP12X280-45	1SCA022382R0800	0.30
	325	301...430	OXP12X325-45	1SCA022304R4450	0.36
	395	371...500	OXP12X395-45	1SCA022749R0640	0.43
	465	441...570	OXP12X465-45	1SCA022423R1770	0.51
	535	511...640	OXP12X535-45	1SCA022723R2940	0.59
Shaft diameter 12 mm					
OT3200...4000E, OT1600...200U	280	256...385	OXP12X280-45	1SCA022382R0800	0.30
	325	301...430	OXP12X325-45	1SCA022304R4450	0.36
	395	371...500	OXP12X395-45	1SCA022749R0640	0.43
	465	441...570	OXP12X465-45	1SCA022423R1770	0.51
	535	511...640	OXP12X535-45	1SCA022723R2940	0.59

Accessories for manual switch-disconnectors OT160...4000

Ordering information for shaft accessories



OHZX10

Shaft alignment ring

Improves the alignment between handle and shaft.

Suitable for handle	Colour	Type	Order code	Weight/ unit kg
For pistol handles OH_65...275J6...12	Black	OHZX10	1SCA022661R3610	0.23



OHZX14

Extension ring for pistol handles

Improves the handle operation by increasing the distance between the operating handle and the panel.

Suitable for handle	Colour	Type	Order code	Weight/ unit kg
OHB_	Black	OHZX14	1SCA022851R6590	0.06



OXT20X210X

Shaft support for long shafts

Supporting 12 mm shafts longer than 280 mm.

Suitable for switches	Type	Order code	Weight/ unit kg
OT1000...4000	OXT20X210X	1SCA103684R1001	1.50

Overturn protection

The accessory package contains locking features that restrict operation more than 90 degree.

Suitable for shafts	Type	Order code	Weight/ unit kg
OXP12X_	OHZX19	1SCA157090R1001	0.25

Accessories for manual switch-disconnectors OT160...4000

Ordering information for auxiliary contacts



OA1G10, OA3G01



1NO



1NC



OEA28

Video: Auxiliary contacts installation

Video: Installation of OEA28 – Module for auxiliary contacts

Auxiliary contact blocks for OT160EV...4000, IP20

Contact numbering according to EN 50013. Early break type auxiliary contacts means that in the switches, the NO aux.contacts break before the main contacts open.

In types with auxiliary contacts mountable under the mechanism cover, the "test" contacts operate in ON- and OFF-positions as well as when the handle is turned to TEST-position (45° over the OFF-position). The "test indication" contacts operate only when the handle is turned to TEST-position. The OA1G10 (N.O.) or OA3G01 (N.C.) auxiliary contact blocks can be used as standard auxiliary contacts, "test" or "test indication" contacts.
The desired functions are achieved when an auxiliary contact block is installed in a specific place (see mounting instructions). In order to activate the "test" and "test indication" features a handle with test function is required. The test contacts can be used as standard auxiliary contacts as well.

See next pages for performance data, functions and contact timing.

Suitable for switches	Function	Type	Order code	Weight/ unit kg
Mounting on the left side of the switch				
Max. 8 auxiliary contact blocks with the OEA28 module.				
OT160EV...4000, OT200...2000U	1NO	OA1G10	1SCA022353R4970	0.03
	1NO	OA1G10AU [1]	1SCA022436R7910	0.03
	1NC	OA3G01	1SCA022456R7410	0.03
	1NC	OA3G01AU [1]	1SCA022819R5260	0.03
Mounting under the mechanism cover				
Max. 4 test contacts or 2 test contacts + 2 test indication contacts				
OT160EV...250E, OT200U	1NO, early break	OA1G10	1SCA022353R4970	0.03
	1NO, early break	OA1G10AU [1]	1SCA022436R7910	0.03
	1NC, early make	OA3G01	1SCA022456R7410	0.03
	1NC, early make	OA3G01AU [1]	1SCA022819R5260	0.03
Max. 4 test contacts + 4 test indication contacts Switches with _K handle: 2+4 auxiliary contacts with _P handle: 4+4 auxiliary contacts [2]				
OT315...800E, OT400...600U	1NO, early break	OA1G10	1SCA022353R4970	0.03
	1NO, early break	OA1G10AU [1]	1SCA022436R7910	0.03
	1NC, early make	OA3G01	1SCA022456R7410	0.03
	1NC, early make	OA3G01AU [1]	1SCA022819R5260	0.03
Max 4 test indication contacts + 6 test contacts + 2 early operation test contacts				
OT1000...4000E, OT800...2000U	1NO, early break	OA1G10	1SCA022353R4970	0.03
	1NO, early break	OA1G10AU [1]	1SCA022436R7910	0.03
	1NC, early make	OA3G01	1SCA022456R7410	0.03
	1NC, early make	OA3G01AU [1]	1SCA022819R5260	0.03

[1] Types _AU are gold plated for extremely difficult circumstances and low voltages.
[2] See optional handles in page 121-124.

Module for auxiliary contacts with OT160EV...4000

Screw mounting to the left side of the switch.

Suitable for switches	Type	Order code	Weight/ unit kg
OT160EV...4000	OEA28	1SCA022714R8810	0.04

- Does not fit side operated switches.

Accessories for manual switch-disconnectors OT160...4000

Technical data for auxiliary contacts

Performance data of auxiliary contacts according to IEC 60947-5-1

For OA1G_, OA3G_

AC15		DC12			DC13	
U_e V AC	I_e A	U_e VDC	I_e A	P W	I_e A	P W
230	6	24	10	240	2	50
400	4	72	4	290	0.8	60
415	4	125	2	250	0.55	70
690	2	250	0.55	140	0.27	70
		440	0.1	44		

For OA1G_, OA3G_

U_i	690 V
U_{imp}	4 kV
Pollution degree	3
I_{th}	16 A
Cable size	1...2 x 0.75...2.5 mm²
Maximum fuse	16 A / gG
NEMA	A600, R300, wire size: 18 - 14 AWG, 1(2)

Function table of auxiliary contacts

Handle position	Main contacts	Aux./Test contacts N.O.	Test indication contact N.O.
Test	Open	Closed	Closed
0	Open	Open	Open
I	Closed	Closed	Open

Handle indications and functions

- The handle indicates the position of the main contacts of the switch with complete reliability in all situations. If the contacts are welded together, the handle does not reach the OFF-position but remains between ON and OFF, maintaining the door interlock and preventing padlocking.
- When operating the switch to the TEST-position with a test handle, the test auxiliary contacts change position. The main contacts remain open.

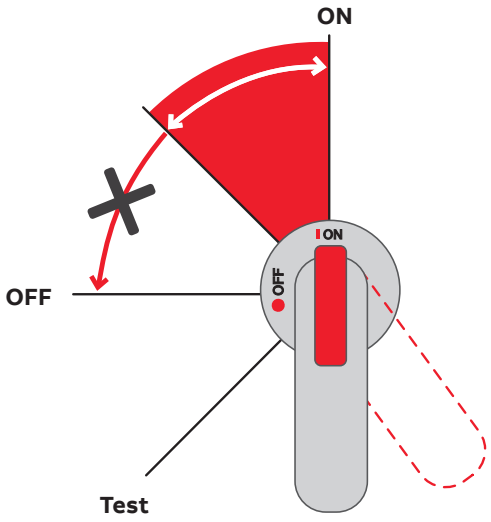

Accessories for manual switch-disconnectors OT160...4000

Technical data for auxiliary contacts

ON and OFF-functions of main and auxiliary contacts

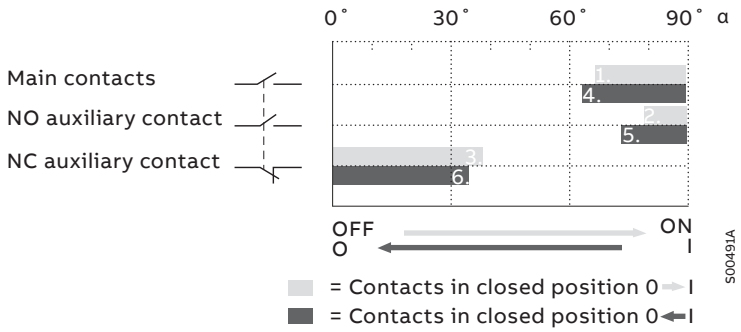

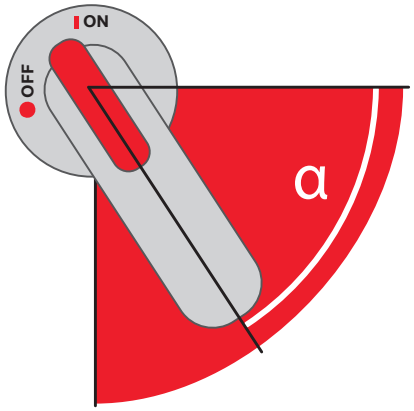

Closing:
1. Main contacts close
2. NO auxiliary contacts close
3. NC auxiliary contacts open

Opening:
4. Main contacts open
5. NO auxiliary contacts open
6. NC auxiliary contacts close

ON and OFF-functions of main and auxiliary contacts OT160EV...4000

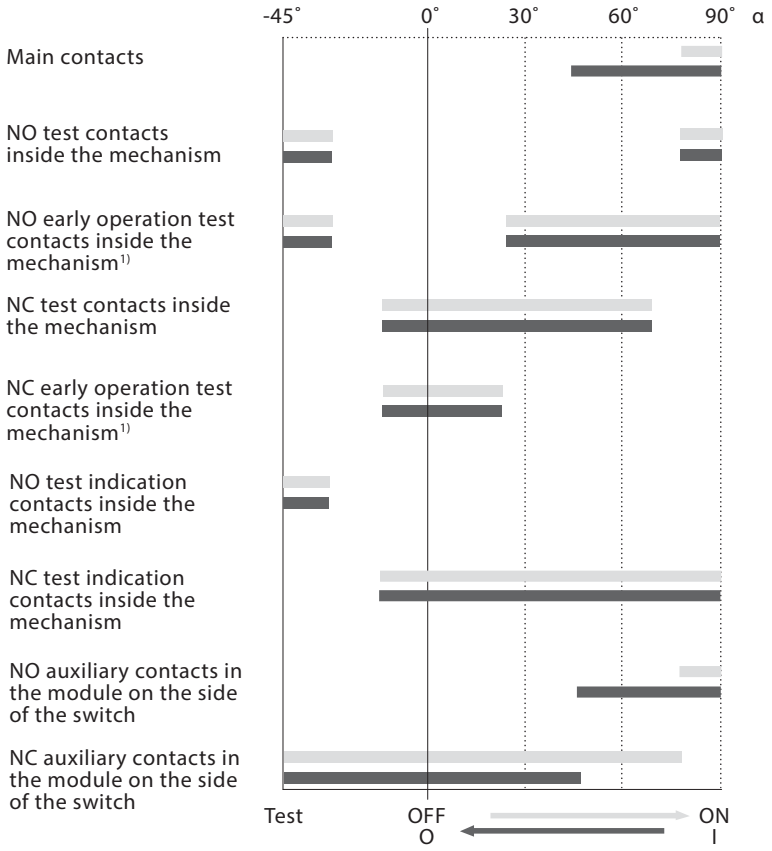

Contact	Contact configuration
OA1G10	1NO
OA3G01	1NC

(1) OT1000...4000 only

Accessories for manual switch-disconnectors OT160...4000

Ordering information for fourth poles and neutral terminals


OTZ400E


OTZ800E


OTZ1250E


OTZ1600E


OTZ2500E


OTZ4000E


OXN250


OXN400


OXN1250T

Fourth poles, simultaneous function with the main contacts

Mountable on the side of the 3-pole switch without wide phase distances.

Suitable for switches IEC	Type	Order code	Weight/ unit kg
OT160EV...250E	OTZ250E	1SCA022735R9420	0.35
OT315...400E	OTZ400E	1SCA022749R1960	0.59
OT630...800E	OTZ800E	1SCA022807R5100	1.70
OT1000...1250E	OTZ1250E	1SCA103765R1001	4.30
OT1600E	OTZ1600E	1SCA100431R1001	4.54
OT2000...2500E	OTZ2500E	1SCA107931R1001	4.30
OT3200...4000E	OTZ4000E	1SCA128807R1001	8.40

Neutral pole

Suitable for switches UL, including phase barrier	Type	Order code	Weight/ unit kg
OT200U	OTZ200U	1SCA151734R1001	0.35
OT400U	OTZ400U	1SCA151735R1001	0.59
OT600U	OTZ600U	1SCA151736R1001	1.70
OT800...1200U	OTZ1200U	1SCA151733R1001	4.54

Neutral links

Detachable, mountable separately to the base plate.

Suitable for switches	I_{th} A	Type	Order code	Weight/ unit kg
OT160EV...250E, OT200U	250	OXN250	1SCA022752R9950	0.26
OT315...400E, OT400U	400	OXN400	1SCA022770R3060	0.70
OT630...800E, OT600U	800	OXN800T	1SCA022829R0840	0.96
OT1000...4000E	1250	OXN1250T	1SCA104162R1001	2.20

Accessories for manual switch-disconnectors OT160...4000

Ordering information for terminal shrouds



OTS400G1S



OTS800G1S



OTS1600G1L



OTS1600G1S



OTS2500G1L



OTS2500G1S



OTS4000G1S/3



OTS4000G1S/4

Terminal shrouds for OT switches, snap-on mounting, grey

Pack of single pole shrouds, IP3X. Transparent shrouds available on request.

Suitable for switches	Dimension Height mm	Type	Order code	Units/type pcs	Weight/ type kg
For 3-pole OT switches					
OT160EV...250E, OT200U	83	OTS250G1L/3 *)	1SCA022731R8150	3	0.09
	35.5	OTS250G1S/3 *)	1SCA022731R8310	3	0.06
OT315...400E, OT400U	51.5	OTS400G1S/3 *)	1SCA022736R9060	3	0.15
	126	OTS400G1L/3 *)	1SCA022736R8840	3	0.09
OT630...800E, OT600U	138.6	OTS800G1L/3 *)	1SCA022776R7890	3	0.32
	61.5	OTS800G1S/3 *)	1SCA022776R8190	3	0.17
OT1000...1600E, OT800...1200U	158.5	OTS1600G1L/3 *)	1SCA022871R9510	3	0.60
	96.9	OTS1600G1S/3 *)	1SCA022871R9600	3	0.40
OT2000...2500E	168	OTS2500G1L/3 *)	1SCA107261R1001	3	1.00
	107.5	OTS2500G1S/3 *)	1SCA107260R1001	3	0.50
OT3200...4000E	233	OTS4000G1L/3 *)	1SCA129042R1001	3	1.20
	156.5	OTS4000G1S/3 *)	1SCA129044R1001	3	1.00
For 4-pole OT switches					
OT160EV...250E, OT200U	83	OTS250G1L/4 *)	1SCA022731R8230	4	0.12
	35.5	OTS250G1S/4 *)	1SCA022731R8400	4	0.08
OT315...400E, OT400U	51.5	OTS400G1S/4 *)	1SCA022736R9650	4	0.20
	126	OTS400G1L/4 *)	1SCA022736R9490	4	0.12
OT630...800E, OT600U	138.6	OTS800G1L/4 *)	1SCA022776R7970	4	0.42
	61.5	OTS800G1S/4 *)	1SCA022776R8270	4	0.26
OT1000...1600E, OT800...1200U	158.5	OTS1600G1L/4 *)	1SCA022871R9780	4	0.80
	96.9	OTS1600G1S/4 *)	1SCA022871R9860	4	0.50
OT2000...2500E	168	OTS2500G1L/4 *)	1SCA107262R1001	4	1.30
	107.5	OTS2500G1S/4 *)	1SCA107271R1001	4	0.70
OT3200...4000E	233	OTS4000G1L/4 *)	1SCA129043R1001	4	1.40
	156.5	OTS4000G1S/4 *)	1SCA129045R1001	4	1.60

*) L= long type, S= short type

Shrouds for terminal clamps

Snap-on mounting, transparent plastic, IP2X.

Suitable for terminal clamps	Type	Order code	Units/ type pcs	Weight/ unit kg
OZXB2, 2L	OZXB2K	1SCA022264R0010	3	0.05
OZXB3, 4	OZXB3K	1SCA022264R0440	3	0.20
OZXB5, 6	OZXB4K	1SCA022199R2850	3	0.24
OZXB7, 7L	OZXB5K	1SCA022283R8040	3	0.13

Accessories for manual switch-disconnectors OT160...4000

Ordering information for mounting accessories



OTB_

Phase separators

Grey plastic plate for maintaining 1 in/25.44 mm clearance between the phases without terminal shrouds. Snap-on mounting.

Suitable for switches	Type	Order code	Units/ type	Weight/ type
			pcs	kg
OT600U, OT630...800E, 3- and 4-pole	OTB800/6	1SCA022821R7760	6	0.35
OT800...1200U, OT1000...2500E, 3- and 4-pole	OTB1600/6	1SCA100768R1001	6	0.50
OT3200...4000, 3- and 4-pole	OTB4000/6	1SCA129040R1001	6	0.80
OT1600...2000U, 3- and 4-pole	OTB1600/6C	1SCA104661R1001	12	0.74



PB200 high



PB100 low

Phase barriers

The phase barriers designed for ABB Tmax T4-T5 MCCB's can also be used for OT200...800 switch disconnectors. 3-pole switch disconnectors need 4 barriers and 4-pole switch disconnectors need 6 barriers for full protection.

Suitable for switches	Number of poles	Height	Cutting width w of the phase barrier	Type	Order code	Units/ type	Weight/ type
		mm	mm			pcs	kg
OT160EV...250	3	100	55	PB100 low	1SDA054970R1	4	
	3	200	55	PB200 high	1SDA054972R1	4	
	4	100	55	PB100 low	1SDA054971R1	6	
	4	200	55	PB200 high	1SDA054973R1	6	
OT315...400	3	100	67	PB100 low	1SDA054970R1	4	
	3	200	67	PB200 high	1SDA054972R1	4	
	4	100	67	PB100 low	1SDA054971R1	6	
	4	200	67	PB200 high	1SDA054973R1	6	
OT600...800	3	100	90	PB100 low	1SDA054970R1	4	
	3	200	90	PB200 high	1SDA054972R1	4	
	4	100	90	PB100 low	1SDA054971R1	6	
	4	200	90	PB200 high	1SDA054973R1	6	

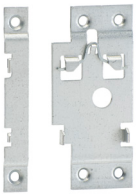

OSGZD1

DIN-rail mounting kit

For mounting a switch fuse into 35 mm DIN-rail

Suitable for switches	Type	Order code	Units/ type	Weight/ type
			pcs	kg
OT160EV...250E	OSGZD1	1SCA115688R1001	1	0.20

Accessories for manual switch-disconnectors OT160...4000

Ordering information for terminal clamps


OZXB1L


OZXB2


OZXB2L


OZXB3


OZXB4


OZXB7


OZXB8


OZXB9


OZXB5


OZXB6

Terminal clamp sets for Al- and Cu-cables

Suitable for switches	Cable cross section mm²	Suitable shroud type	Terminal clamp type	Order code	Units/ type pcs	Weight/ unit kg
OZXB type Al/Cu connectors made of stainless steel						
OT160EV...250E, OT200U	10...70	OTS250_L	OZXB1L	1SCA022169R2030	3	0.15
	10...70	OTS250_L	OZXB1L/1	1SCA022194R0030	1	0.05
	25...120	OZXB2K	OZXB2	1SCA022119R7610	3	0.34
	25...120	OZXB2K	OZXB2/1	1SCA022194R0200	1	0.12
	25...120	OZXB2K	OZXB2L	1SCA022158R7750	3	0.43
	25...120	OZXB2K	OZXB2L/1	1SCA022194R0460	1	0.15
	95...185	OTS250_L	OZXB8	1SCA022744R1510	3	0.50
	95...185	OTS250_L	OZXB8/1	1SCA022744R1600	1	0.15
	95...240	OTS250_L	OZXB9	1SCA022750R3210	3	0.50
	95...240	OTS250_L	OZXB9/1	1SCA022750R3300	1	0.14
OT315...400E, OT400U	25...120	OZXB2K	OZXB2L	1SCA022158R7750	3	0.43
	25...120	OZXB2K	OZXB2L/1	1SCA022194R0460	1	0.15
	95...185	OZXB3K	OZXB3	1SCA022136R8100	3	1.28
	95...185	OZXB3K	OZXB3/1	1SCA022194R0620	1	0.13
	2x(95...185)	OZXB3K	OZXB4	1SCA022137R4760	3	1.71
	2x(95...185)	OZXB3K	OZXB4/1	1SCA022194R0890	1	0.60
	120...240	OZXB5K	OZXB7	1SCA022185R0040	3	1.00
	120...240	OZXB5K	OZXB7/1	1SCA022194R1430	1	0.34
	120...240	OZXB5K	OZXB7L	1SCA022185R7130	3	1.20
	120...240	OZXB5K	OZXB7L/1	1SCA022194R1600	1	0.39
	95...185	OTS400_L	OZXB8	1SCA022744R1510	3	0.50
	95...185	OTS400_L	OZXB8/1	1SCA022744R1600	1	0.15
	95...240	OTS400_L	OZXB9	1SCA022750R3210	3	0.50
	95...240	OTS400_L	OZXB9/1	1SCA022750R3300	1	0.14
OT630...800E, OT600U	120...300	OZXB4K	OZXB5	1SCA022137R2470	3	2.22
	120...300	OZXB4K	OZXB5/1	1SCA022194R1010	1	0.80
	2x(120...300)	OZXB4K	OZXB6	1SCA022137R4920	3	3.03
	2x(120...300)	OZXB4K	OZXB6/1	1SCA022194R1270	1	1.00
OT1000...1600E, OT800...1200U	95...185	OTS1600_L	OZXB3	1SCA022136R8100	3	1.28
	95...185	OTS1600_L	OZXB3/1	1SCA022194R0620	1	0.13
	2x(95...185)	OTS1600_L	OZXB4	1SCA022137R4760	3	1.71
	2x(95...185)	OTS1600_L	OZXB4/1	1SCA022194R0890	1	0.60
	120...300	OTS1600_L	OZXB5	1SCA022137R2470	3	2.22
	120...300	OTS1600_L	OZXB5/1	1SCA022194R1010	1	0.80
	2x(120...300)	OTS1600_L	OZXB6	1SCA022137R4920	3	3.03
	2x(120...300)	OTS1600_L	OZXB6/1	1SCA022194R1270	1	1.00
	120...240	OTS1600_L	OZXB7L	1SCA022185R7130	3	1.20
	120...240	OTS1600_L	OZXB7L/1	1SCA022194R1600	1	0.39

Accessories for manual switch-disconnectors OT160...4000

Ordering information for terminal clamps


OZXB3


OZXB4


OZXR95


OZXR2X185


OZXR2X300


OZXR185


OZXR240


OZXR300

Terminal clamp sets for Al- and Cu-cables for IEC versions

Suitable for switches	Cable cross section mm²	Suitable shroud type	Terminal clamp type	Order code	Units/ type pcs	Weight/ unit kg
OZXB type Al/Cu connectors made of stainless steel						
OT2000...2500E	95...185	OTS2500_L	OZXB3	1SCA022136R8100	3	1.28
	95...185	OTS2500_L	OZXB3/1	1SCA022194R0620	1	0.13
	2x(95...185)	OTS2500_L	OZXB4	1SCA022137R4760	3	1.71
	2x(95...185)	OTS2500_L	OZXB4/1	1SCA022194R0890	1	0.60
	120...300	OTS2500_L	OZXB5	1SCA022137R2470	3	2.22
	120...300	OTS2500_L	OZXB5/1	1SCA022194R1010	1	0.80
	2x(120...300)	OTS2500_L	OZXB6	1SCA022137R4920	3	3.03
	2x(120...300)	OTS2500_L	OZXB6/1	1SCA022194R1270	1	1.00
	120...240	OTS2500_L	OZXB7L	1SCA022185R7130	3	1.20
	120...240	OTS2500_L	OZXB7L/1	1SCA022194R1600	1	0.39
OT3200...4000E, OT1600...2000U	95...185	OTS4000_L	OZXB3	1SCA022136R8100	3	1.28
	95...185	OTS4000_L	OZXB3/1	1SCA022194R0620	1	0.13
	2x(95...185)	OTS4000_L	OZXB4	1SCA022137R4760	3	0.43
	2x(95...185)	OTS4000_L	OZXB4/1	1SCA022194R0890	1	0.60
	120...300	OTS4000_L	OZXB5	1SCA022137R2470	3	2.22
	120...300	OTS4000_L	OZXB5/1	1SCA022194R1010	1	0.80
	2x(120...300)	OTS4000_L	OZXB6	1SCA022137R4920	3	3.03
	2x(120...300)	OTS4000_L	OZXB6/1	1SCA022194R1270	1	1.00
	120...240	OTS4000_L	OZXB7L	1SCA022185R7130	3	1.20
	120...240	OTS4000_L	OZXB7L/1	1SCA022194R1600	1	0.39
OZXR type Al/Cu connectors made of stainless steel and copper						
OT160EV...250E, OT200U	25...95	OTS250_L	OZXR95	1SCA115530R1001	3	0.21
OT160200...250E, OT200U	95...185	OTS250_L	OZXR185	1SCA115531R1001	3	0.45
OT315...400E, OT400U	2x(95...185)	-	OZXR2X185	1SCA115534R1001	3	0.66
	185...300	-	OZXR300	1SCA115533R1001	3	0.87
OT630...800E, OT600U	2x(185...300)	-	OZXR2X300	1SCA115535R1001	3	1.59
OT315...400E, OT400U	95...240	OTS400_L	OZXR240	1SCA115532R1001	3	0.42
OZXP type Al/Cu connectors made of tin plated aluminium profile						
OT160EV...250E, OT200U	6...95	OTS250_L	OZXP95	1SCA115539R1001	3	0.03
OT315...400E, OT400U	35...240	OTS400_L	OZXP240	1SCA115542R1001	3	0.27
OT630...800E, OT600U	2x(70...240)	OTS800_L	OZXP2X240	1SCA115544R1001	3	1.38

Accessories for manual switch-disconnectors OT160...4000

Ordering information for terminal lugs



OZXA200

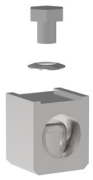

OZXA400



OZXA800



OZXA1200

Terminal lug kits for Al- and Cu-cables for UL/CSA disconnect switches

One kit includes 6 pcs.

Suitable for switches	Cable cross section mm²	Type	Tightening torque lb.in/Nm	Weight/ unit kg	in
OT200U_	AWG 4-300MCM	OZXA-200	275/31.1	0.04	0.09
OT400U_	AWG 2-600MCM	OZXA-400	375/42.4	0.05	0.12
OT600...800U_	2 X AWG 2-600MCM	OZXA-800	500/56.5	0.21	0.45
OT800U, OT1200...2000U_	4 X AWG 2-600MCM	OZXA-1200	500/56.5	0.45	0.98

For ordering, please consult us.

Technical data for terminal lugs

Description	
UL approval file	E6207
Temperature Rating, °C	75
Wire tightening Type of tool	Allen (Hex) wrench
Lug mounting	Bolt & nut mounting
AWG (American Wire Gauge) wire class	B.C

Accessories for manual switch-disconnectors OT160...4000

Ordering information for conversion kits



OESAZW2

6 and 8-pole switch mechanism

Attachment levers for connecting two 3- or 4-pole switches provided with holes, enabling different shaft distances. The combination switches can be mounted either horizontally or vertically. OESAZW2 includes also OHB145J12.

Suitable for switches	Shaft distance mm	Type	Order code	Weight/ unit kg
OT160G, OT160EV...250E, OT200U	45+(0...13)x15	OESAZW2	1SCA022078R1600	0.80
OT315...800E,OT400...600U	60+(0...19)x20	OETLZW9	1SCA022061R3300	1.10

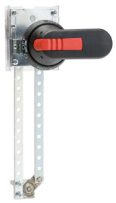

OTZW25

Change-over switch mechanism

Attachment levers. Two switches connected with a mechanism operating into I-O-II -positions. Two 3 or 4-pole switches needed.

Suitable for switches	Shaft distance mm	Type	Order code	Weight/ unit kg
OT160G, OT160EV...250E, OT200U	210+(0...18)x20	OTZW25	1SCA022778R6920	2.80
OT315...400E, OT400U	210+(0...11)x20	OETLZW11	1SCA022078R0030	3.00
OT630...800E, OT600U	210+(0...20)x20	OETLZW12	1SCA022078R0200	4.60

See the table of the handles and shafts included in the conversion kits on next spread.



OTZW26

By-pass switch mechanism

A combination of two switches in parallel with a third switch for change-over operation to by-pass, for example, a breaker for maintenance. Three 3 or 4-pole switches needed.

Suitable for switches	Shaft distance mm	Type	Order code	Weight/ unit kg
OT160G, OT160EV...250E, OT200U	Between 1 and 2: 210+(0...9)x20 Between 1 and 3: 250+(0...9)x20	OTZW26	1SCA022778R7060	3.30
OT315...800E, OT400...600U	Between 1 and 2: 210+(0...18)x20 Between 1 and 3: 250+(0...18)x20	OETLZW13	1SCA022078R0460	4.00



OETLZW14

Mechanical interlock mechanism

Prevents one switch from moving to ON-position, if the other is not in OFF-position. When mounted upside down, prevents one switch from moving to OFF-position, if the other is not in ON-position. (UPS-usage, make-before-break).

Suitable for switches	Shaft distance mm	Type	Order code	Weight/ unit kg
OT160EV...250E, OT200U	190	OTZW10	1SCA022431R5280	0.40
OT315...400E, OT400U	250	OETLZW14	1SCA022077R3410	0.70
OT315...800E, OT400...600U	300	OETLZW3	1SCA022049R0380	0.80
OT315...4000E, OT400...2000U	500	OETLZW15	1SCA022081R9340	1.24

See the table of the handles and shafts included in the conversion kits on next spread.

Accessories for manual switch-disconnectors OT160...4000

Dimensional drawings for conversion kits

Change-over and by-pass switches

OTZW25

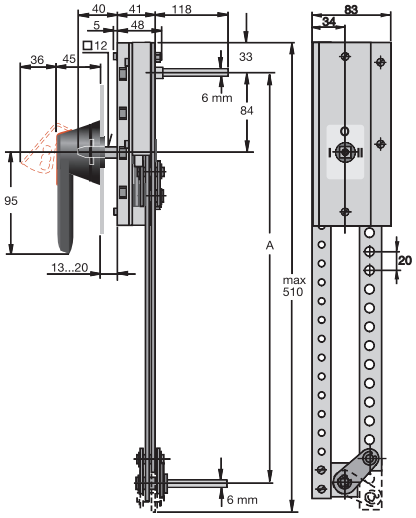

OTZW26

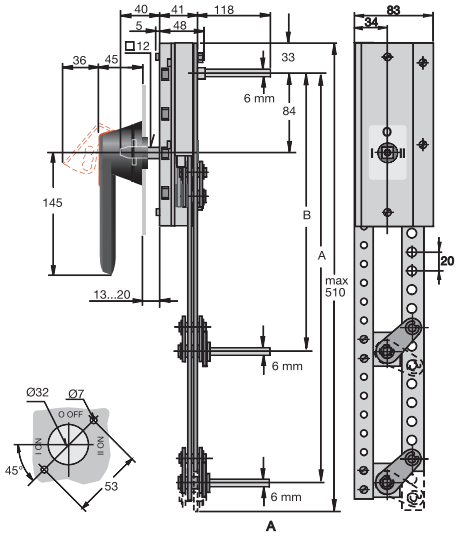

OTZW25

A	210+(0...18)x20 mm

A00213_B

OTZW26

A	210+(0...18)x20 mm
B	210+(0...18)x20 mm

S00213A

OETLZW11

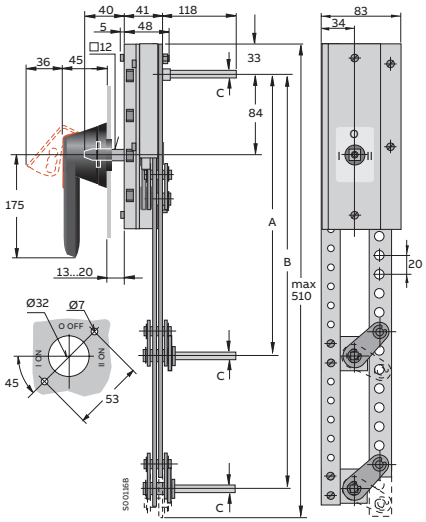

OETLZW12, OETLZW13

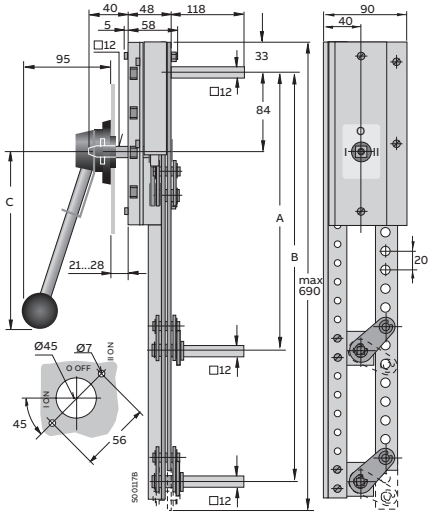

OETLZW11

A	210+(0...11)x20 mm

A00116B

Main dimensions mm

OETLZW12, OETLZW13

	OETLZW12	OETLZW13
A	210+(0...18)x20 mm	210+(0...18)x20 mm
B		250+(0...18)x20 mm
C	220 mm	320 mm

S00117B

Accessories for manual switch-disconnectors OT160...4000

Dimensional drawings for conversion kits

6 and 8-pole switches

OESAZW2

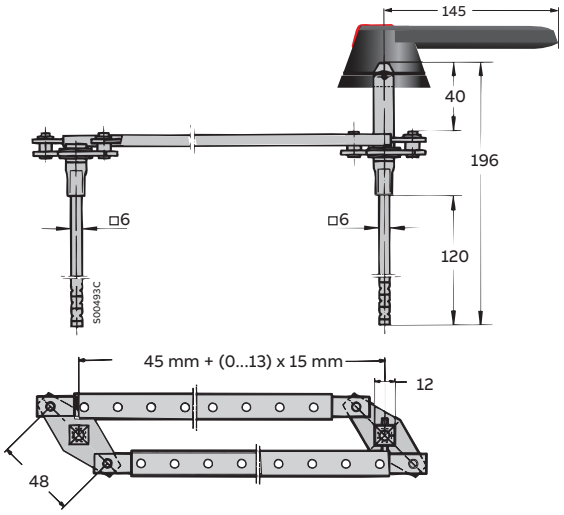

Mechanical interlock

OTZW10

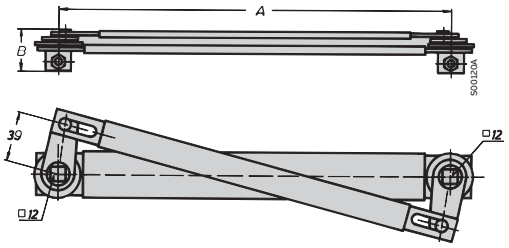

OETLZW3, OETLZW14, OETLZW15

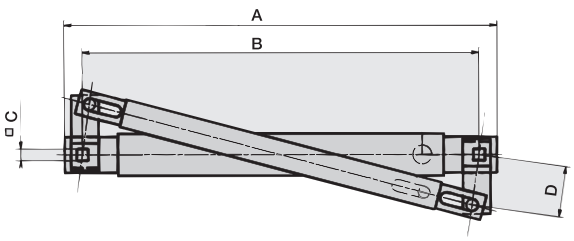

OTZW10

	OTZW10
A	206
B	190
C	6
D	30

S00119A

OETLZW3, OETLZW14, OETLZW15

	OETLZW3	OETLZW14	OETLZW15
A	300	250	500
B	31	31	36

S00120A

Accessories for manual switch-disconnectors OT160...4000

Ordering information for conversion kit accessories



OTZW25



OTZW26

Shafts and handles for conversion kits

Conversion kit type	To be ordered separately		Included in conversion kit delivery		The standard handle / shaft of one of the combined switches can be used	
	Shaft	Handle	Shaft	Handle	Shaft	Handle
6 and 8-pole switches						
OESAZW2	-	-	x (2 pcs)	OHB145J12	-	-
OETLZW9	-	-	-	-	x	x
Change-over switches						
OTZW25	-	-	x (2 pcs)	OHB95J12E011	-	-
OETLZW11	-	-	x (2 pcs)	OHB145J12E011	-	-
OETLZW12	-	-	x (2 pcs)	YASDA21	-	-
By-pass switches						
OTZW26	-	-	x (3 pcs)	OHB95J12E011	-	-
OETLZW13	-	-	x (3 pcs)	YASDA6	-	-
Mechanical interlock						
OTZW10	-	-	-	-	x	x
OETLZW14	-	-	-	-	x	x
OETLZW3	-	-	-	-	x	x
OETLZW15	-	-	-	-	x	x

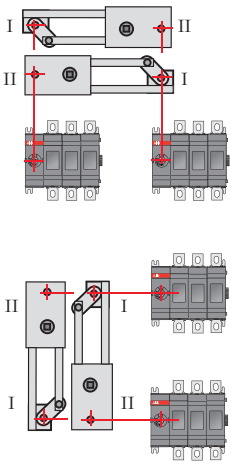

Change-over switches

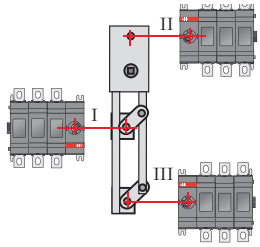

Bypass switches

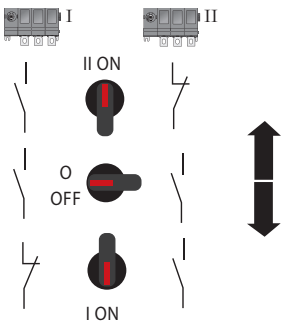

Change-over switches

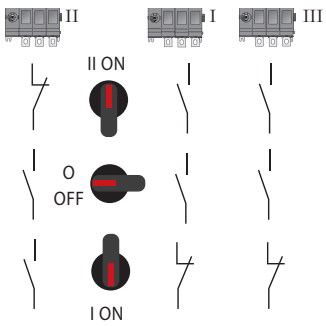

Bypass switches

Accessories for manual switch-disconnectors OT160...4000

Ordering information for locking accessories

Locking accessories



OHZX4

Door interlock bracket for pistol handles

Prevents defeating the door interlock.

Suitable for switches	Type	Order code	Weight/ unit kg
For pistol handles OH_45...275	OHZX4	1SCA022467R2470	0.03



OETLZW5

Cam attachment

Cam attachment for Castell, Lowe & Fletcher and Ronis interlock. Lock, handle or shaft are not included. Mounting on OXP shaft working together with external OH door handle.

Suitable for switches	Type	Order code	Weight/ unit kg
OT315...4000	OETLZW5	1SCA022052R3900	0.14

See the table of the handles and shafts included in the conversion kits on previous page.

Shaft locking kit

Fixing the shaft to the switch mechanism. The screw is included in the package.

Suitable for switches	Type	Order code	pcs
OT160G, OT160EV...250E, OT200U	OTZS2/B10	1SCA126043R1001	10
OT315E...4000E, OT400U...2000U	OZX1	1SCA105708R1001	10

Accessories for manual switch-disconnectors OT160...4000

Ordering information for mechanical interlocks



OTZT1A



OTZT2A



OTZT3A



OTZL4

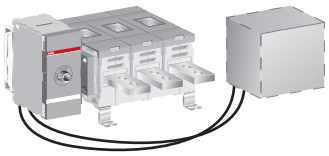

OT_EM_ + OTZL4

OT switch + OTZL4 or Emax, T7

Mechanism interlock kits and electrical interlocks

OT160EV... 4000 switch-disconnectors can be interlocked in the OFF-position using padlocks or a mechanical interlock kit mounted on the mechanism. The diameter of the lock bail can be max 8 mm.

Suitable for switches	Type	Order code	Weight/ unit kg
Interlocking in the OFF-position			
OT200U, OT160EV...250	OTZT1A	1SCA106522R1001	0.21
OT400U, OT315...400E	OTZT2A	1SCA106523R1001	0.57
OT600U, OT630...800E	OTZT3A	1SCA106525R1001	0.75
OT800U, OT1200U, OT1000...4000	OTZT4A	1SCA106526R1001	1.15
Interlocking in the OFF- and ON-positions			
OT200U, OT160EV...250	OTZT1L	1SCA106527R1001	0.21
OT400U, OT315...400E	OTZT2L	1SCA106529R1001	0.57
OT600U, OT630...800E	OTZT3L	1SCA106530R1001	0.75
OT800U, OT1200U, OT1000...4000	OTZT4L	1SCA106531R1001	1.15

Mechanical interlock between OT earthing switch and OT1000...2500 switch-disconnector or E-max / T7 breaker

The operation of both the earthing switch and the switch-disconnector / breaker into ON-position at the same time is mechanically prevented by using two cables between the earthing switch and main switch or breaker. Cable length 1370 mm.

Suitable for switches	Description	Type	Order code	Weight/ unit kg
Mechanical interlock kit for earthing switches type _EM				
OT1000...2500EM		OTZL4	1SCA116554R1001	0.5
Wire rope				
OT1000...2500EM, E-max/T7	Including 2 pcs 1370 mm wire rope	-	1SDA062127R1	0.2

Electrical and mechanical interlock OTZT_

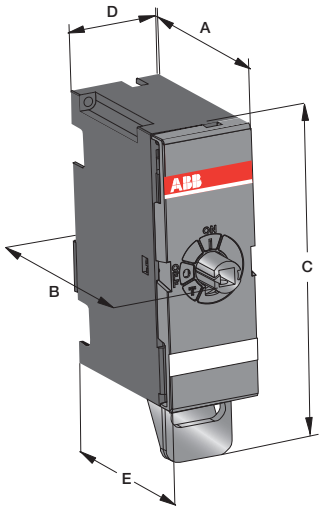

	OTZT1_	OTZT2_	OTZT3_	OTZT4_
	mm	mm	mm	mm
A	69	81	86	88
B	82	102	110	110
C	122	152	201	258
D	35	52	65	84
E	73	91	98	95

M00350/OTZT1-4_ A

Accessories for manual switch-disconnectors OT160...4000

Ordering information for electrical interlocks



OTZM4A

Electrical interlock kit

Suitable for switches	Description	Type	Order code	Weight/ unit kg
OT1000...2500E	Locking in OFF-position	OTZM4A	1SCA118510R1001	0.85
	Locking in OFF- and ⏚ -position	OTZM4L	1SCA118511R1001	0.85

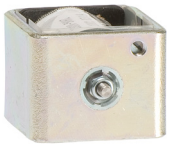

PDAL2

Coils for OTZT_ and OTZM_ electrical interlocks

By installing a coil inside the housing of the interlock kit the switch can be interlocked electrically in the OFF-position or both in the OFF- and ON-positions. The electrical interlock works using the “closed circuit principle”, meaning that when the control voltage is not connected to the coil, the switches provided with A-type interlocks cannot be turned to the ON-position and switches with L-type interlocks cannot be turned to the ON- or OFF- positions.

Suitable for switches	Type	Order code	Weight/ unit kg
AC coils			
110 V AC, 50 Hz	PDAL2/110AC50Hz	1SCA106543R1001	0.15
110 V AC, 60 Hz	PDAL2/110AC60Hz	1SCA107100R1001	0.15
120 V AC, 60 Hz	PDAL2/120AC60Hz	1SCA111353R1001	0.15
208 V AC, 60 Hz	PDAL2/208AC60Hz	1SCA107101R1001	0.15
230 V AC, 50 Hz	PDAL2/230AC50Hz	1SCA107102R1001	0.15
240 V AC, 60 Hz	PDAL2/240AC60Hz	1SCA111356R1001	0.15
DC coils			
24 V DC	PDAL2/24DC	1SCA106542R1001	0.15
48 V DC	PDAL2/48DC	1SCA107103R1001	0.15
110 V DC	PDAL2/110DC	1SCA107105R1001	0.15
125 V DC	PDAL2/125DC	1SCA111338R1001	0.15
220 V DC	PDAL2/220DC	1SCA112503R1001	0.15
Technical data for the coil			
Operating voltage	U = 0.8...1.1 x U_n		
Operating ambient temperature	-40 °C...+65 °C		
Power consumption	with AC 6.5 W with DC 9 VA		

ITS2 monitoring unit
Greater intelligence comes from within



Real-time measuring and monitoring have never been easier, thanks to the ITS2. Its built-in intelligence means that whether it's supporting a data center, hospital or commercial building, operatives can access its monitoring data and provide an instant response in the event of any system faults.

The result of this fully digital solution? Smarter, data-driven decisions made in real time.

Integrated and future-ready

- Cloud-based connectivity with ABB Ability™ Energy and Asset Manager
- Easy configuration with Ekip Connect
- Configure ITS2 monitoring in just 1 min

Convenience and ease

- One unit to digitalize switches and fusegear also compatible with OT Switch-disconnectors and OS Switch fuses
- Space-saving factory-mounted design
- No need for additional power supply

Safe and reliable

- Ensures continuous operations
- Fuse monitoring functionality (EFM)
- System safety and protection protocols

Watch the video how to configure ITS2 monitoring unit in 1 minute with Ekip Connect

Watch the video how to add extra protection to your system with Ekip Connect in less than 1 minute

More info about ITS2 Monitoring units from here

Ease of installation
A busy facility needs any new monitoring equipment to get up and running quickly to avoid operational interruptions.

Installing the ITS2 monitoring is a pain-free, intuitive process, with Ekip Connect used to configure your entire system.

The ITS2 communicates with the main gateway using Modbus RTU as standard option or Modbus TCP, using the add on communication module. The gateway enables direct communication to the ABB Ability™ Energy and Asset Manager using the Ekip Com Hub cartridge module.

The gateway uploads your system data to the cloud-connected ABB Ability™ platform, enabling full control in less than 10 minutes.

Seamless integration
A complete digital solution needs to be compatible with your existing infrastructure and processes. The ITS2 monitoring unit integrates flawlessly both with ABB's switches and fusegear products

- Uses ABB Ability™ Energy and Asset Manager to collect information from enabled ABB devices installed in low-voltage distribution systems
- Monitor the electrical system from anywhere, anytime
- ABB Ability™ Energy and Asset Manager compatible gateways:
  Emax 2 and Tmax circuit breakers, EkipUP and TruONE Automatic Transfer Switches (equipped with Ekip Com Hub) or with Ekip E-Hub via Modbus RS-485.

Connection to ABB Ability™ Energy and Asset Manager for all switches and fusegear with ITS2

Standalone ITS2 Modbus RTU

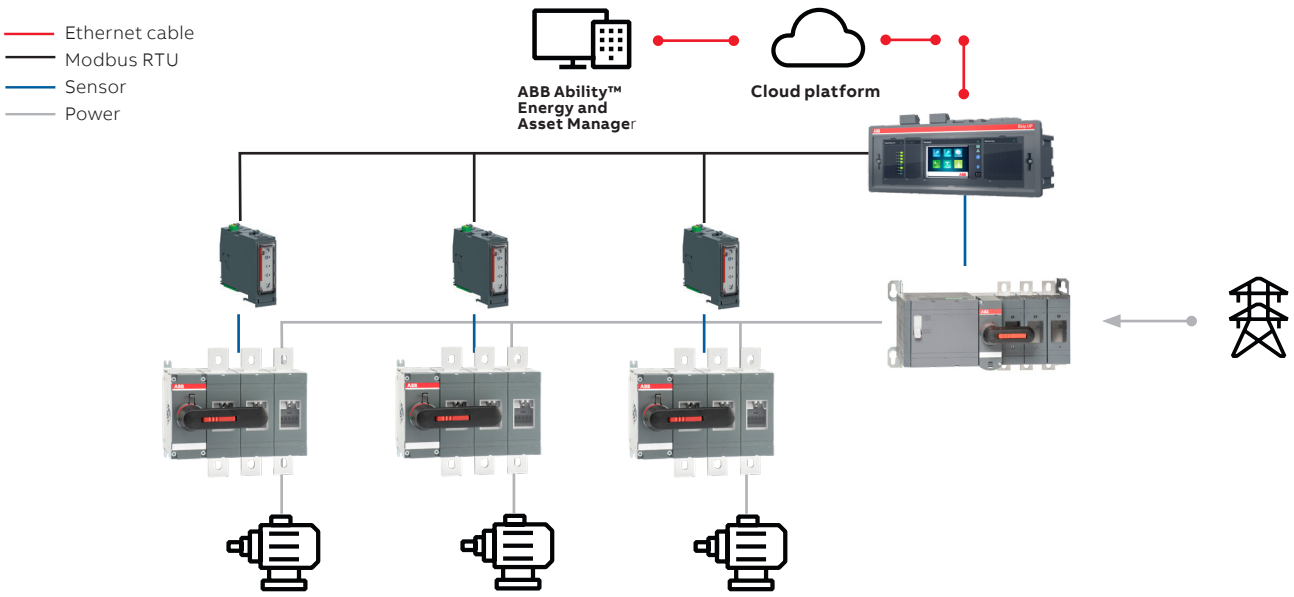

—
Click for ABB Ability™ Energy and Asset Manager

—
Click for Ekip Connect 3

Accessories for switch-disconnectors 160...2500 A

Ordering information for ITS2 monitoring unit



ITS2.1 Standalone Module

ITS2 monitoring unit

Suitable for switches	Type	Order number	Units/ type [pcs]	Weight/unit [kg]
OT 160...2500	ITS2.1 Standalone Module	1SEP622724R0001	1	0.5

Accessories that need to be ordered seperatly

Description	Suitable for switches	Type	Order number	Units/ type [pcs]	Weight/ unit [kg]
Voltage sensing connectors. The connector package includes also the faston terminals.	OT160EV...250E	OMZB18	1SCA120153R1001	8	0.2
	OT315E...400E	OMZB28	1SCA120154R1001	8	0.2
	OT630E...800E	OMZB38	1SCA120155R1001	8	0.2
	OT1000E...2500E	OMZB48	1SCA120156R1001	8	0.2



Ekip Com Modbus TCP-OX

Suitable communication modules (Modbus RTU comes as standard)

Type	Order code
Ekip Com Modbus TCP-OX	1SDA104052R1

Accessories for switch-disconnectors 160...2500 A

Ordering information for ITS2 monitoring unit

ITS2.1: which data can be monitored

Features		
Line Voltage	(V AC)	V12, V23, V31
Phase Voltage	(V AC)	V1N, V2N, V3N
Current	(A)	L1, L2, L3
Active power	(kW)	L1, L2, L3
Reactive power	(kVA)	L1, L2, L3
Cos phi	(Cosϕ)	L1, L2, L3
Power factor	(PF)	Sum
Energy	(kWh)	Sum
Fuse status	(EFM)	L1, L2, L3
Temperature	(°C)	Terminal L2
Switch position		On/Off
Motor Control		by bus
Communication bus		RS485
Protocol		Modbus RTU & TCP

Configurable Modbus RTU parameters	
Default setting	19200 E,8,1 – Default Modbus addr. 3
Baudrates	9600, 19200
Parity, stop- start bits	E,8,1 – O,8,1 – N,8,2 – N,8,1
Modbus address range	1 – 247

Connection data at the ITS2.1 multiplug	
1	24 VDC
2	24 V GND (0V)
3	RS-485 0V
4	RS-485 + (A)
5	RS-485 - (B)

Conductor cross section	
Stranded min.	0,25 mm²
Stranded max.	1,5 mm²
Stranded, with ferrule without plastic sleeve max.	1,5 mm²
Stranded, with ferrule with plastic sleeve max.	0,75 mm²



Motorized switch-disconnectors
Made for remote operations

Introduction to motorized switch-disconnectors

Product overview	155
Product range	156
Type designation key for the types OTM40..125	157
Type designation key for the types OTM160...4000	158

Technical data

Motorized switch-disconnectors (IEC)	159
Motorized switch-disconnectors motor operators	162

Ordering information

Accessory guide for OTM40...OTM125	163
Accessory guide for OTM160...OTM2500	164
Motorized switch-disconnectors (IEC)	165
Motorized switch-disconnectors with wide phase distance (IEC)	168

Dimensional drawings

Motorized switch-disconnectors (IEC)	169
Motorized switch-disconnectors with wide phase distance (IEC)	174

Ordering information for accessories

Handle accessories	175
Auxiliary contacts	176
ON and OFF-functions of main and auxiliary contacts	173
Fourth poles, neutral and earth terminals	179
Terminal shrouds	180
Terminal clamps	181

Motorized switch-disconnectors
Designed for remote operation

Motor operated switch-disconnectors by ABB are suitable for a wide range of demanding applications that may require remote operation. For the same reason, they have been designed to be virtually maintenance free throughout their entire lifespan.

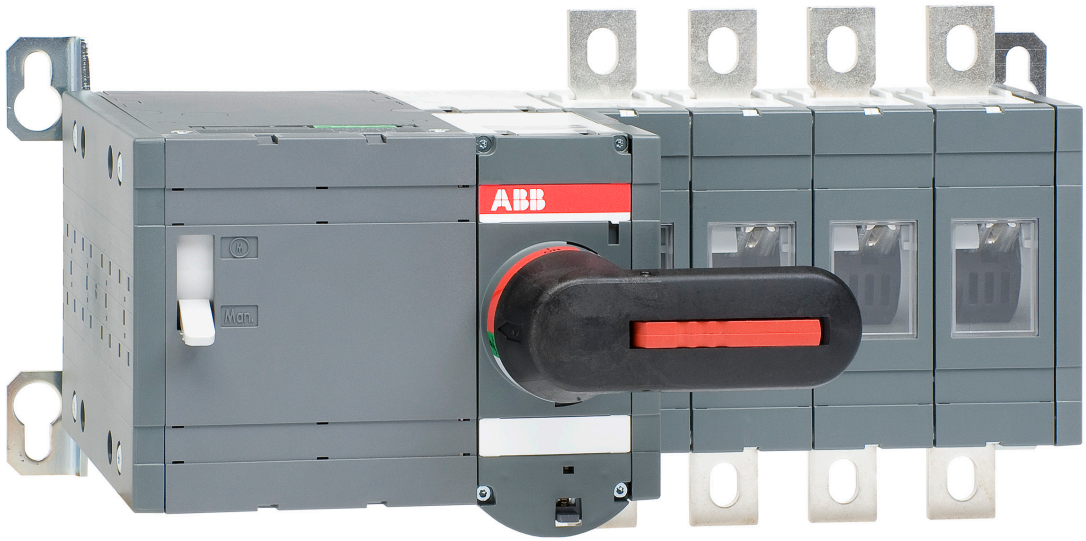

Easy to install

The motorized switch disconnectors have a snap-on control wire connections. Auxiliary contacts can be snapped on to the sides of the switch. Quick and easy installation saves time and expenses.

Safety and protection

These devices come equipped with a wide range of safety features, such as IP20 protected finger proof installations. All of the contacts are clearly visible, which makes for clear and reliable position indication. Also, all of our motorized switch-disconnectors are equipped with a handle for manual operation in emergency situations. The handles are of course padlockable into the OFF-position for ensured safety.

Reliable in extreme conditions

Ensuring a high performance level for you is of the utmost importance to us. In applications where the loaded switch may need to be operated remotely, adequate durability has been ensured by testing against the IEC 60947 standard. These devices are also equipped with extremely resistant insulation materials, which help reduce the risk of flash-over between phases in even the most severe circumstances and environments.

Motorized switch-disconnectors

Made for remote operations



Motor operation												
IEC					OTM40F			OTM160E		OTM315E		OTM630E
					OTM63F			OTM200E		OTM400E		OTM800E
					OTM80F			OTM250E				
					OTM100F							
					OTM125F							
Switch size	**40 A**	**63 A**	**80 A**	**100 A**	**125 A**	**160 A**	**200 A**	**250 A**	**315 A**	**400 A**	**630 A**	**800 A**



Motor operation					
IEC		OTM1000E	OTM1600E		OTM2000E
		OTM1250E			OTM2500E
					OTM3200E
					OTM4000E
Switch size	**1000 A**	**1250 A**	**1600 A**	**2000**	**2500 A**

Accessories for motorized switch-disconnectors include:

- Handle accessories
- Auxiliary contacts
- Fourth poles
- N & PE terminals
- Terminal shrouds
- Terminal clamps

Please note that listed accessories are not automatically included in your order. Ordering information for accessories from page 170-171 and 174-177.

Motorized switch-disconnectors OTM40..125

Type key

Understanding the type code keys below will help you quickly identify the correct product for your needs.

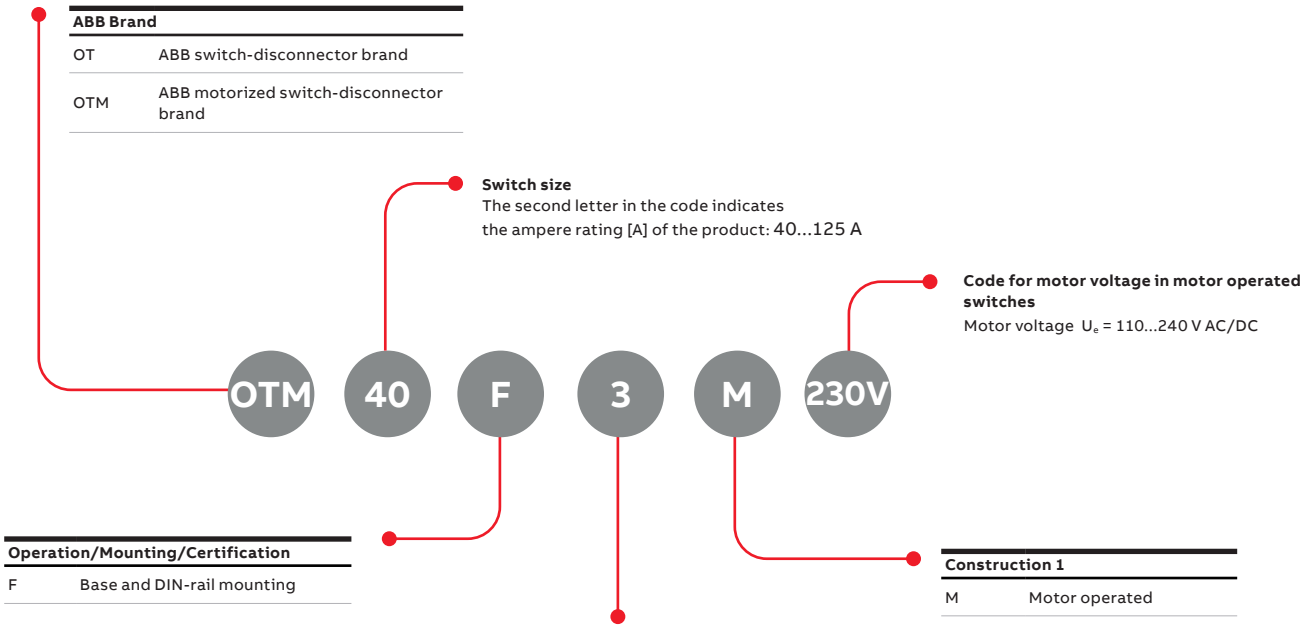

ABB Brand	
OT	ABB switch-disconnector brand
OTM	ABB motorized switch-disconnector brand

Switch size
The second letter in the code indicates the ampere rating [A] of the product: 40...125 A

Code for motor voltage in motor operated switches
Motor voltage U_e = 110...240 V AC/DC

Operation/Mounting/Certification	
F	Base and DIN-rail mounting

Construction 1	
M	Motor operated

Number of poles and placing of the operating mechanism	
3	3-poles
4	4-poles

Motorized switch-disconnectors OTM160...4000

Type key

Understanding the type code keys below will help you quickly identify the correct product for your needs.

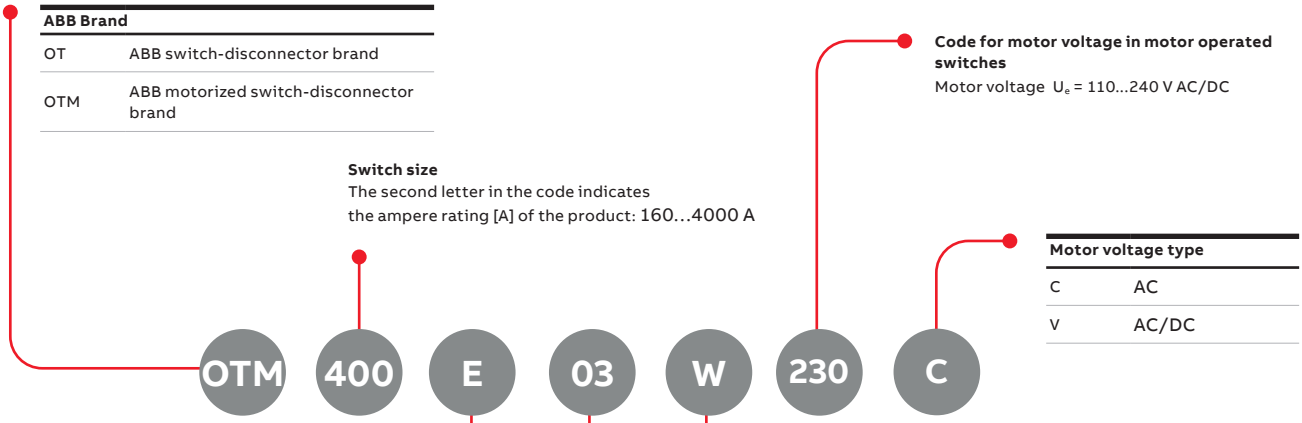

ABB Brand	
OT	ABB switch-disconnector brand
OTM	ABB motorized switch-disconnector brand

Switch size
The second letter in the code indicates the ampere rating [A] of the product: 160...4000 A

Code for motor voltage in motor operated switches
Motor voltage U_e = 110...240 V AC/DC

Motor voltage type	
C	AC
V	AC/DC

Construction 1	
M	Motor operated

Operation/Mounting/Certification	
E	Front operated, base mounting, IEC

Number of poles and placing of the operating mechanism	
02	2-poles, motor operator at the left end of the switch
03	3-poles, motor operator at the left end of the switch
04	4-poles, motor operator at the left end of the switch

Motorized switch-disconnectors, IEC

Technical data

Technical data according to IEC 60947-3

Switch type			OTM40F	OTM63F	OTM80F	OTM100F	OTM125F
Rated insulation voltage and rated operational voltage AC20/DC20	Pollution degree 3		800 V	800 V	800 V	800 V	800 V
Dielectric strength		50 Hz 1 min.	6 kV	6 kV	6 kV	6 kV	6 kV
Rated impulse withstand voltage			8 kV	8 kV	8 kV	8 kV	8 kV
Rated thermal current and rated operational current AC20/DC20	Ambient 40 °C [2]	In open air	40 A	63 A	80 A	115 A	125 A
	Ambient 40 °C [2]	In enclosure	40 A	63 A	80 A	115 A	125 A
	Ambient 60 °C	In enclosure	32 A	50 A	63 A	80 A	100 A
..with minimum conductor cross section		Cu	10 mm²	16 mm²	25 mm²	35 mm²	50 mm²
Rated operational current, AC-21A		up to 500 V	40 A	63 A	80 A	100 A	125 A
		690 V	40 A	63 A	80 A	100 A	125 A
Rated operational current, AC-22A		up to 500 V	40 A	63 A	80 A	100 A	125 A
		690 V	40 A	63 A	80 A	100 A	125 A
Rated operational current, AC-23A		up to 415 V	40 A	63 A	80 A	80 A	90 A
		500 V	40 A	63 A	80 A	80 A	70 A
		690 V	40 A	40 A	40 A	40 A	50 A
Rated operational current / poles in series, DC-21A		up to 48 V	40 A/1	63 A/1	80 A/1	100 A/1	125 A/1
		110 V	40A/2	63 A/2	80 A/2	100 A/2	125 A/2
		220 V	40 A/3	63 A/4	80 A/4	100 A/4	125 A/4
Rated operational current / poles in series, DC-22A		up to 48 V	40 A/1	63 A/1	80 A/1	100 A/1	125 A/1
		110 V	40 A/2	63 A/2	80 A/2	100 A/2	125 A/2
		220 V	40 A/4	63 A/4	80 A/4	80 A/4	80 A/4
Rated operational current / poles in series, DC-23A		up to 48 V	40 A/1	63 A/1	80 A/1	100 A/1	125 A/1
		110 V	40 A/2	63 A/2	80 A/2	100 A/2	125 A/2
		220 V	40 A/4	63 A/4	63 A/4	63 A/4	63 A/4
Rated operational power, AC-23A (These values are given for guidance and may vary acc. to the motor manufacturer)		230 V	7.5 kW	15 kW	22 kW	22 kW	22 kW
		400...415 V	18.5 kW	30 kW	37 kW	37 kW	45 kW
		500 V	22 kW	37 kW	37 kW	37 kW	45 kW
		690 V	37 kW	37 kW	37 kW	37 kW	45 kW
Rated breaking capacity, AC-23A		up to 415 V	320 A	504 A	640 A	640 A	720 A
		500 V	320 A	480 A	480 A	480 A	560 A
		690 V	320 A	320 A	320 A	320 A	400 A
Rated conditional short-circuit current I_{cc} (r.m.s.) and corresponding max. allowed cut-off current $\hat{I}_c$. The cut-off current $\hat{I}_c$ refers to values listed by fuse manufacturers (single phase test acc. to IEC60269)	I_q 50kA, 415V	$\hat{I}_c$	16.5 kA	16.5 kA	16.5 kA	16.5 kA	16.5 kA
		gG/aM	125 A/125 A	125 A/125 A	125 A/125 A	125 A/125 A	125 A/125 A
	I_q 18kA, 690V	$\hat{I}_c$	11 kA	11 kA	11 kA	11 kA	11 kA
		gG/aM	125 A/125 A	125 A/125 A	125 A/125 A	125 A/125 A	125 A/125 A
	I_q 50kA, 690V	$\hat{I}_c$					
		gG/aM	63 A/63 A	63 A/63 A	63 A/63 A	63 A/63 A	63 A/63 A
Rated short-time withstand current	r.m.s. -value I_{cw}	690 V, 1s.	2.5 kA	2.5 kA	2.5 kA	2.5 kA	2.5 kA
Rated short circuit making capacity [1]	Peak value I_{cm}	690 V	3.6 kA	3.6 kA	3.6 kA	3.6 kA	3.6 kA
Rated capacitor power (The capacitor ratings are limited by the fuse link.)		400...415 V	15 kVAr	25 kVAr	30 kVAr	40 kVAr	50 kVAr
Power loss / pole	With related current		1.6 W	2.8 W	3.5 W	4.0 W	6.3 W
Mechanical endurance	Divide by two for operation cycles		20 000 Oper.	20 000 Oper.	20 000 Oper.	20 000 Oper.	20 000 Oper.
Cable size	Cu-wire size suitable		2.5...25 mm² 2x2.5...16 mm²	10...70 mm²	10...70 mm²	10...70 mm²	10...70 mm²
	For terminal clamps		14-4 AWG 2x14-6 AWG	8-2/0 AWG	8-2/0 AWG	8-2/0 AWG	8-2/0 AWG
Terminal tightening torque	Counter torque required		6 Nm 55 lb.in	6 Nm 55 lb.in	6 Nm 55 lb.in	6 Nm 55 lb.in	6 Nm 55 lb.in
Operating torque	3-pole switches		5 Nm	5 Nm	5 Nm	5 Nm	5 Nm
Weight without accessories	3-pole		0.89 kg	0.89 kg	0.89 kg	0.89 kg	0.89 kg
	4-pole		1.00 kg	1.00 kg	1.00 kg	1.00 kg	1.00 kg

[1] Short circuit duration >50 ms, without fuse protection
[2] Acc. to IEC 60947-1, § 6.1.1.

Motorized switch-disconnectors, IEC

Technical data

Technical data according to IEC 60947-3

Switch type			OTM160E	OTM200E	OTM250E	OTM315E	OTM400E	OTM630E	OTM800E
Rated insulation voltage and rated operational voltage AC-20, DC-20	Pollution degree 3		1 000 V	1 000 V	1 000 V	1 000 V	1 000 V	1 000 V	1 000 V
Dielectric strength		50 Hz 1 min.	10 kV	10 kV	10 kV	10 kV	10 kV	10 kV	10 kV
Rated impulse withstand voltage			12 kV	12 kV	12 kV	12 kV	12 kV	12 kV	12 kV
Rated thermal current and rated operational current AC-20, DC-20	In open air		200 A	200 A	250 A	315 A	400 A	630 A	800 A
in ambient 40 °C (4)	In enclosure		160 A	200 A	250 A	315 A	400 A	630 A	800 A
...with minimum cable cross section		Cu	70 mm²	95 mm²	120 mm²	185 mm²	240 mm²	2x185 mm²	2x240 mm²
Rated operational current, AC-21A		≤ 500 V	200 A	200 A	250 A	315 A	400 A	630 A	800 A
		690 V	160 A	200 A	250 A	315 A	400 A	630 A	800 A
		1000 V	160 A	200 A	250 A	315 A	400 A	630 A	800 A
Rated operational current, AC-22A		≤ 500 V	200 A	200 A	250 A	315 A	400 A	630 A	800 A
		690 V	160 A	200 A	250 A	315 A	400 A	630 A	800 A
		1000 V	160 A	200 A	250 A	315 A	400 A	630 A	800 A
Rated operational current, AC-23A		≤ 500 V	160 A	200 A	250 A	315 A	400 A	630 A	800 A
		690 V	160 A	200 A	250 A	315 A	400 A	630 A	800 A
		1000 V	135 A	135 A	135 A	200 A	200 A	400 A	400 A
Rated operational current / poles in series, DC-21A [1]		24...110 V	160 A/2	200 A/2	250 A/2	315 A/1 [2]	400 A/1 [2]	630 A/1	800 A/1
		220 V	160 A/2	200 A/2	250 A/2	315 A/2 [2]	400 A/2 [2]	630 A/1	800 A/1
		440 V	160 A/3	200 A/3	250 A/3	315 A/3	360 A/3	630 A/2	800 A/2
		660 V	160 A/4	200 A/4	230 A/4 [2]	315 A/4	360 A/4	630 A/4 [2]	650 A/4 [2]
Rated operational power, AC-23		230 V	48 kW	60 kW	75 kW	100 kW	132 kW	200 kW	250 kW
		400 V	80 kW	110 kW	140 kW	160 kW	220 kW	355 kW	450 kW
(These values are given for guidance and may vary acc. to the motor manufacturer)		415 V	88 kW	110 kW	145 kW	180 kW	230 kW	355 kW	450 kW
		500 V	112 kW	132 kW	170 kW	220 kW	280 kW	400 kW	560 kW
		690 V	144 kW	200 kW	250 kW	315 kW	400 kW	630 kW	800 kW
Rated breaking capacity in category AC-23		≤ 500 V	1 280 A	1 600 A	2 000 A	2 520 A	3 200 A	5 040 A	6 400 A
		690 V	1 280 A	1 600 A	2 000 A	2 520 A	3 200 A	5 040 A	6 400 A
Rated conditional short-circuit current I_q (r.m.s.) and corresponding max. allowed cut-off current $\hat{I}_c$ of fuse. The cut-off current $\hat{I}_c$ referes to values listed by fuse manufacturers (single phase test acc. To IEC60269)	I_q 100kA, 500V Max. OFA_fuse size	$\hat{I}_c$	40.5 kA	40.5 kA	40.5 kA	61.5 kA	61.5 kA	90 kA	90 kA
		gG/aM	315 A/315 A	315 A/315 A	315 A/315 A	500 A/450 A	500 A/450 A	800 A/1 000 A	800 A/1 000 A
	I_q 80kA, 690V Max. OFA_fuse size	$\hat{I}_c$	40.5 kA	40.5 kA	40.5 kA	59 kA	59 kA	83.5 kA	83.5 kA
		gG/aM	355 A/315 A	355 A/315 A	355 A/315 A	500 A/500 A	500 A/500 A	800 A/1 000 A	800 A/1 000 A
Rated short-time withstand current	r.m.s. value I_{cw}	≤ 1000 V 0.15 s	15 kA	15 kA	15 kA	31 kA	31 kA	38 kA	38 kA
		≤ 1000 V 0.25 s	15 kA	15 kA	15 kA	24 kA	24 kA	36 kA	36 kA
		≤ 1000 V 1 s	8 kA	8 kA	8 kA	15 kA	15 kA	20 kA	20 kA
Rated short-circuit making capacity	Peak value I_{cm}	≤ 1000 V	30 kA	30 kA	30 kA	65 kA	65 kA	80 kA	80 kA
Rated capacitor power when no initial charge on the capacitor	The capacitor ratings are limited by the fuse links	415 V	80 kVAr	100 kVAr	115 kVAr	145 kVAr	180 kVAr	250 kVAr	310 kVAr
		500 V	96 kVAr	120 kVAr	135 kVAr	175 kVAr	215 kVAr	300 kVAr	375 kVAr
		690 V	128 kVAr	160 kVAr	190 kVAr	250 kVAr	325 kVAr	450 kVAr	550 kVAr
Power loss / pole	With rated current		3.2 W	4 W	6.5 W	6.5 W	10 W	25 W	40 W
Mechanical endurance	Divide by two for oper. cycles		20 000 Oper.	20 000 Oper.	20 000 Oper.	16 000 Oper.	16 000 Oper.	10 000 Oper.	10 000 Oper.
Weight without accessories	3-pole switch		5.08 kg	5.08 kg	5.08 kg	7.6 kg	7.6 kg	13.6 kg	13.6 kg
Terminal bolt size	Metric thread diameter x length		M8x25 mm	M8x25 mm	M8x25 mm	M10x30 mm	M10x30 mm	M12x40 mm	M12x40 mm
Terminal tightening torque	Counter torque required		15-22 Nm	15-22 Nm	15-22 Nm	30-44 Nm	30-44 Nm	50-75 Nm	50-75 Nm
Operating torque	3-pole switch disconnector		7 Nm	7 Nm	7 Nm	16 Nm	16 Nm	27 Nm	27 Nm

[1] Further ratings on request.
[2] Category B.

Motorized switch-disconnectors, IEC

Technical data

Technical data according to IEC 60947-3

Switch type			OTM1000E	OTM1250E	OTM1600E	OTM2000E	OTM2500E	OTM3200E	OTM4000E
Rated insulation voltage and rated operational voltage AC20/DC20	Pollution degree 3		1 000 V	1 000 V	1 000 V	1 000 V	1 000 V	1 000 V	1 000 V
Dielectric strength		50 Hz 1 min.	10 kV	10 kV	10 kV	10 kV	10 kV	10 kV	10 kV
Rated impulse withstand voltage			12 kV	12 kV	12 kV	12 kV	12 kV	8 kV	8 kV
Rated thermal current and rated operational current AC20/DC20	Ambient 40 °C [1]	In open air	1 000 A	1 250 A	1 600 A	2 000 A	2 500 A	3 200 A	3 800 A [2], 4000 A [5]
	Ambient 40 °C [1]	In enclosure	1 000 A	1 250 A	1 600 A	–	–	–	–
..with minimum conductor cross section	Cu		2x300 mm²	2x400 mm²	2x500 mm²	3x500 mm²	4x500 mm²	4x1 000 mm²	5x1 000 mm²
Rated operational current, AC-21A		up to 690 V	1 000 A	1 250 A	1 600 A	2 000 A [2]	2 500 A [2]	-	–
		1000 V	1 000 A	1 250 A	1 600 A	–	–	–	–
Rated operational current, AC-22A		up to 415 V	1 000 A	1 250 A	1 600 A	2 000 A [2]	2 500 A [2]	3 200 A [2]	3 800 A [2], 4000 A [5]
		500 - 690 V	1 000 A	1 250 A	1 600 A	2 000 A [2] [3]	2 500 A [2] [3]	–	–
Rated operational current, AC-23A		up to 500 V	1 000 A	1 250 A	1 250 A	–	–	–	–
		690 V	1 000 A	1 250 A	1 250 A	–	–	–	–
Rated operational power, AC-23A (These values are given for guidance and may vary acc. to the motor manufacturer)		400...415 V	560 kW	710 kW	710 kW	–	–	–	–
		440 V	630 kW	800 kW	800 kW	–	–	–	–
		500 V	710 kW	900 kW	900 kW	–	–	–	–
		690 V	1 000 kW	1 200 kW	1 200	–	–	–	–
Rated breaking capacity, AC-23A		up to 500 V	10 000 A	10 000 A	10 000 A	–	–	–	–
		690 V	10 000 A	10 000 A	10 000 A	–	–	–	–
Rated conditional short-circuit current I_{cc} (r.m.s.) and corresponding max. allowed cut-off current $\hat{I}_c$. The cut-off current $\hat{I}_c$ refers to values listed by fuse manufacturers (single phase test acc. to IEC60269).	I_q 80kA, 415V Max. OFA_fuse size	$\hat{I}_c$	100 kA	100 kA	100 kA	–	–	–	–
		gG/aM	1 250 A/ 1 250 A	1 250 A/ 1 250 A	1 250 A/ 1 250 A	–	–	–	–
	I_q 100kA, 500V Max. OFA_fuse size	$\hat{I}_c$	106 kA	106 kA	106 kA	–	–	–	–
		gG/aM	1 250 A/ 1 250 A	1 250 A/ 1 250 A	1 250 A/ 1 250 A	–	–	–	–
Rated short-time withstand current	r.m.s. -value I_{cw}	690 V, 0.25 s	50 kA	50 kA	50 kA	80 kA	80 kA	60 kA	60 kA
		690 V, 1 s	50 kA	50 kA	50 kA	55 kA	55 kA	–	–
Rated short circuit making capacity	Peak value I_{cm}	690 V	110 kA [4]	110 kA [4]	110 kA [4]	176 kA	176 kA	176 kA	176 kA
	Max. distance from switch frame to nearest busbar/ cable support		150 mm	150 mm	150 mm	150 mm	150 mm	150 mm	150 mm
Rated capacitor power when no initial charge on the capacitor	The capacitor ratings are limited by the fuse links	415 V	460 kVAr	575 kVAr	575 kVAr	–	–	–	–
		500 V	550 kVAr	690 kVAr	690 kVAr	–	–	–	–
		690 V	750 kVAr	950 kVAr	950 kVAr	–	–	–	–
Power loss / pole	At rated operational current		19 W	29 W	48 W	55 W	85 W	95 W	120 W
Mechanical endurance	Divide by two for operation cycles		6 000 Oper.	6 000 Oper.	6 000 Oper.	6 000 Oper.	6 000 Oper.	5 000 Oper.	5 000 Oper.
Weight without accessories	3-pole		25 kg	25 kg	26 kg	32 kg	32 kg	46.2 kg	51 kg
Terminal bolt size	Metric thread diameter x length		M12x50 mm	M12x50 mm	M12x60 mm	M12x60 mm	M12x60 mm	M12x60 mm	M12x60 mm
Terminal tightening torque	Counter torque required		50...75 Nm	50...75 Nm	50...75 Nm	50...75 Nm	50...75 Nm	50...75 Nm	50...75 Nm
Operating torque	3-pole switch-disconnector		78 Nm	78 Nm	78 Nm	78 Nm	78 Nm	80 Nm	80 Nm

[1] Acc. to IEC60947-1, § 6.1.1.
[2] IEC 947-3, utilization category B, infrequent operation.
[3] Phase barriers or terminal shrouds must be used on both sides of the switch at voltages ≥ 500 V.
[4] The value is 92 kA for 4-pole switch-disconnectors.
[5] OTM4000E_W8_

Motorized switch-disconnectors

Technical data, motor operators

Data for motor operator of switch-disconnectors, OTM according to IEC 60947

Switch type			OTM40...125	OTM160...250	OTM315...400	OTM600...800	OTM1000...4000
Rated operational voltage U_e	Pollution degree 3	3- and 4-pole	110...240 V AC/DC	–	–	–	–
	50/60 Hz	2-pole	–	220V...240 V AC/DC	220V...240 V AC/DC	220V...240 V AC/DC	220V...240 V AC/DC [2]
		3-pole	–	220V...240 V AC	220V...240 V AC	220V...240 V AC	220V...240 V AC
Operating voltage range			0.85...1.1 x U_e	0.85...1.1 x U_e	0.85...1.1 x U_e	0.85...1.1 x U_e	0.85...1.1 x U_e
Operating time [1]	90° I - 0, 0 - I	110...240 V AC/DC	0.5...1.0 s	–	–	–	–
		24 V DC	0.6...1.3 s	–	–	–	–
		110-240 V AC	–	0.5...1.0 s	0.5...1.0 s	0.5...1.5 s	1.0...2.0 s
Nominal current In [1]		110-240 V AC	–	0.3 A	0.5 A	0.9 A	1.4 A
Current inrush [1]		110-240 V AC	–	1.5 A	2.5 A	4 A	10 A
Overload fuse	Type / In / Capacity	110-240 V AC	–	T / 315 mA / H	T / 500 mA / H	T / 1000 mA/ H	T / 2000 mA/ H
	Size		–	5x20 mm	5x20 mm	5x20 mm	5x20 mm
Operating rate	Max. continuous		1 cycles / min	1 cycles / min	1 cycles / min	1 cycles / min	0.5 cycles / min
	Max. short-time ≤ 10 cycles		10 cycles / min	10 cycles / min	10 cycles / min	10 cycles / min	5 cycles / min
Overvoltage category			III	III	III	III	III
Rated impulse withstand voltage U_{imp}			4 kV	4 kV	4 kV	4 kV	4 kV
Dielectric strength		50 Hz 1 min.	1.5 kV	1.5 kV	1.5 kV	1.5 kV	1.5 kV
Impulse command		Min. impulse	–	–	–	–	–
		duration	100 ms	100 ms	100 ms	100 ms	100 ms
Terminals							
Voltage supply wiring for U_e			PE - N - L	PE - N - L	PE - N - L	PE - N - L	PE - N - L
Cross section		solid/stranded	1.5...2.5 mm²	1.5...2.5 mm²	1.5...2.5 mm²	1.5...2.5 mm²	1.5...2.5 mm²
Short-circuit protection device		max.MCB/ fuse size	16 A	16 A	16 A	16 A	16 A
Control terminal for the push -buttons			C - I - O	C - I - O	C - I - O	C - I - O	C - I - O
Push-button control			–	no SELV	no SELV	no SELV	no SELV
Cross section		solid/stranded	1.5 - 2.5 mm²	1.5 - 2.5 mm²	1.5...2.5 mm²	1.5...2.5 mm²	1.5...2.5 mm²
Maximum cable length			100 m	100 m	100 m	100 m	100 m
Terminal for state information		solid/stranded	1.5 mm²	–	–	–	–
State information of locking			–	no SELV	no SELV	no SELV	no SELV
Common, voltage supply		11	3 A/AC-1/250 V	–	–	–	–
Handle attached or motor operator locked		14	3 A/AC-1/250 V	–	–	–	–
		11-12-14 (C/O)	–	5 A/250 V cos=1	5 A/250 V cos=1	5 A/250 V cos=1	5 A/250 V cos=1
Locking motor operator		23-24 (NO)	–	5 A/250 V cos=1	5 A/250 V cos=1	5 A/250 V cos=1	5 A/250 V cos=1
Short-circuit protection device		MCB type and size	C/2A	C/2A	C/2A	C/2A	C/2A
Protection degree (front panel)			IP20	IP20	IP20	IP20	IP20
Operating temperature			-25...+55 °C	-25...+55 °C	-25...+55 °C	-25...+55 °C	-25...+55 °C
Transportation and storage temperature			-40...+70 °C	-40...+70 °C	-40...+70 °C	-40...+70 °C	-40...+70 °C
Max. altitude			2 000 m	2 000 m	2 000 m	2 000 m	2 000 m

[1] Under nominal conditions.
[2] Up to 2500A

Motorized switch-disconnectors
Ordering information

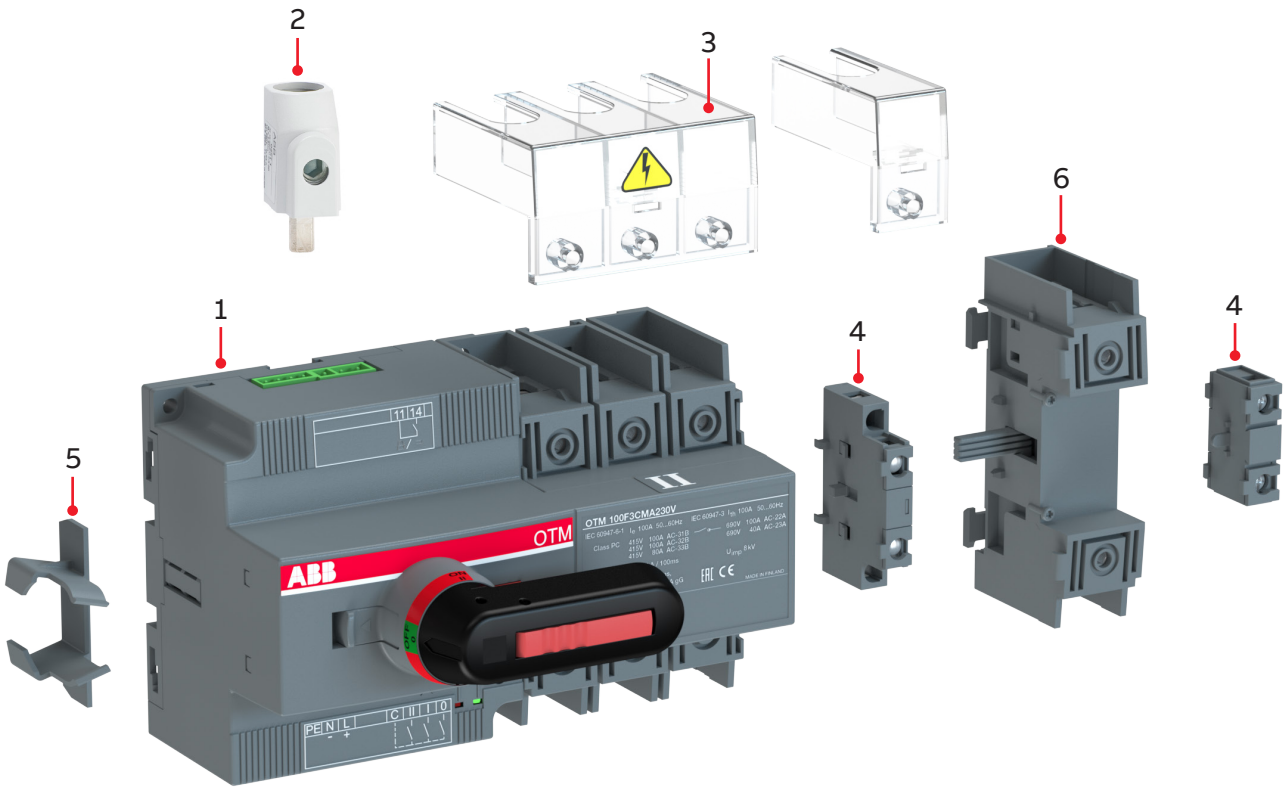

Accessory guide for OTM40…125

1. Motorized switch-disconnector
2. Terminal clamp
3. Terminal shroud
4. Auxiliary contact
5. Storage clip for handle and fuses
6. Detachable neutral link

Please note that listed accessories are not automatically included in your order.

Motorized switch-disconnectors

Ordering information

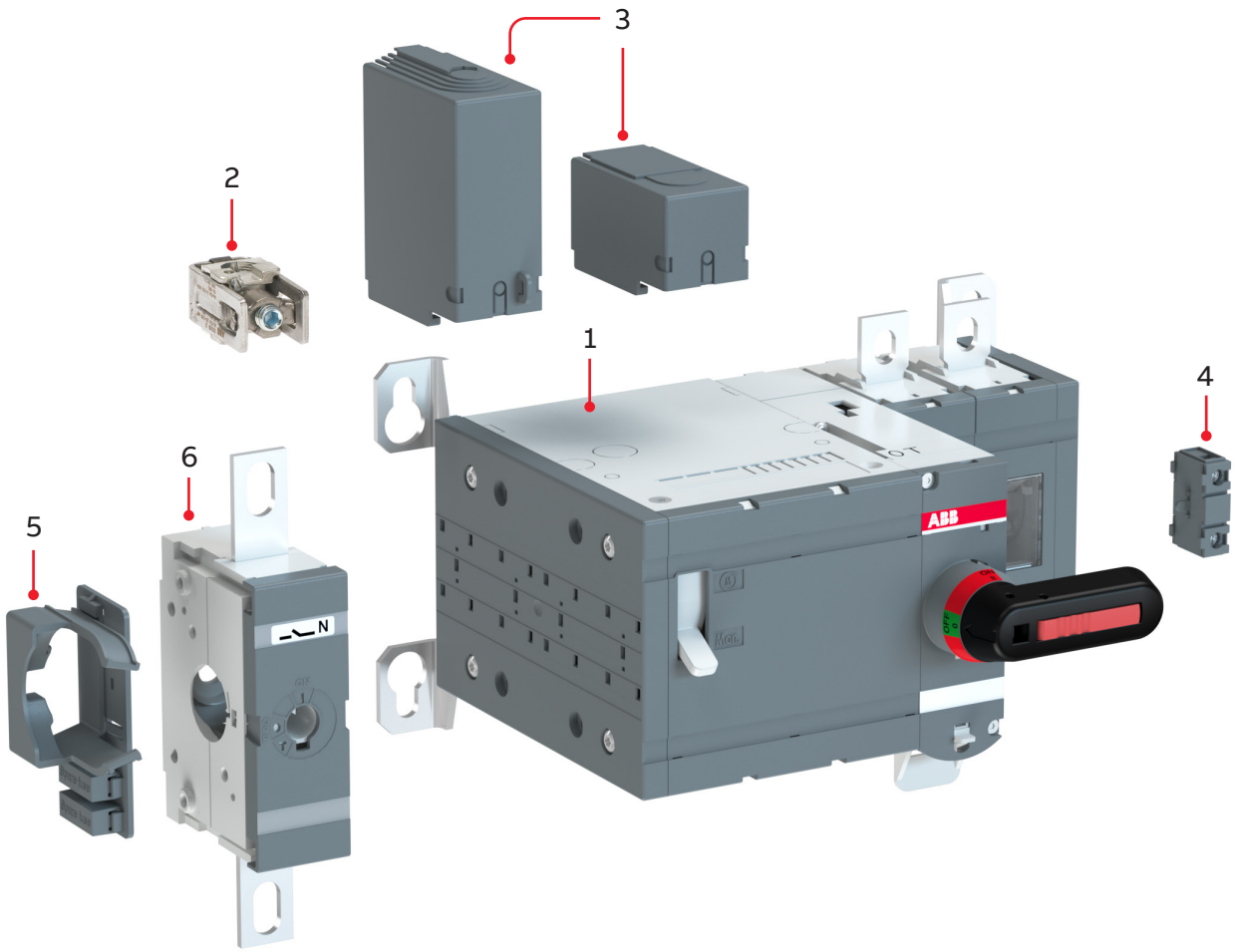

Accessory guide for OTM160…2500

1. Motorized switch-disconnector
2. Terminal clamp
3. Terminal shroud
4. Auxiliary contact
5. Storage clip for handle and fuses
6. Detachable neutral link

Please note that listed accessories are not automatically included in your order.

Motorized switch-disconnectors, IEC

Ordering information



OTM40...125F3M_



OTM40...125F4M_

Motorized switch-disconnectors, IEC

Including a handle for manual operation and terminal clamps.

Type codes for motor voltage U_e =110...240 V AC/DC.

Rated current					
AC-22A ≤ 690 V	**AC-23A 415/690 V**				**Weight/ unit**
A	A	**Number of poles**	**Type**	**Order code**	kg
40	40/40	3	OTM40F3M230V	1SCA122972R1001	1.13
63	63/40	3	OTM63F3M230V	1SCA122971R1001	1.13
80	80/40	3	OTM80F3M230V	1SCA122970R1001	1.13
100	80/40	3	OTM100F3M230V	1SCA122969R1001	1.13
125	90/50	3	OTM125F3M230V	1SCA122968R1001	1.13
40	40/40	4	OTM40F4M230V	1SCA122977R1001	1.24
63	63/40	4	OTM63F4M230V	1SCA122976R1001	1.24
80	80/40	4	OTM80F4M230V	1SCA122975R1001	1.24
100	80/40	4	OTM100F4M230V	1SCA122974R1001	1.24
125	90/50	4	OTM125F4M230V	1SCA122973R1001	1.24

Handle included as standard

Suitable for switch disconnectors	Handle+shaft kit
OTM40...125	OHB65D6CM

Motorized switch-disconnectors, IEC

Ordering information



OTM315...400E3M_



OTM630...800E3M_

Motorized switch-disconnectors, IEC

Including a handle for manual operation, bolt kit with nut and washers for all terminals, male connectors for control circuit and a handle and spare fuse storage clip.
Type codes for motor voltage U_e = 220...240 V AC/DC, see table below.
IEC type with standard phase distance.

Rated current AC-22A ≤ 690 V A	Number of poles	Type	Order code	Weight/ unit kg
160/160	3	OTM160E3M230C	1SCA115283R1001	4.6
160/160	4	OTM160E4M230C	1SCA115293R1001	5.0
200/200	2	OTM200E2M230V	1SCA121184R1001	4.3
200/200	3	OTM200E3M230C	1SCA115284R1001	4.6
200/200	4	OTM200E4M230C	1SCA115292R1001	5.0
250/250	2	OTM250E2M230V	1SCA121185R1001	4.3
250/250	3	OTM250E3M230C	1SCA115285R1001	4.6
250/250	4	OTM250E4M230C	1SCA115290R1001	5.0
315/315	2	OTM315E2M230V	1SCA121189R1001	7.7
315/315	3	OTM315E3M230C	1SCA115334R1001	8.4
315/315	4	OTM315E4M230C	1SCA115335R1001	9.0
400/400	2	OTM400E2M230V	1SCA121199R1001	7.7
400/400	3	OTM400E3M230C	1SCA115333R1001	8.4
400/400	4	OTM400E4M230C	1SCA115336R1001	9.0
630/630	2	OTM630E2M230V	1SCA121190R1001	11.6
630/630	3	OTM630E3M230C	1SCA115354R1001	17.4
630/630	4	OTM630E4M230C	1SCA115357R1001	18.9
800/800	2	OTM800E2M230V	1SCA121197R1001	11.6
800/800	3	OTM800E3M230C	1SCA115355R1001	17.4
800/800	4	OTM800E4M230C	1SCA115356R1001	18.9
1000/1000	2	OTM1000E2M230V	1SCA121396R1001	32.4
1000/1000	3	OTM1000E3M230C	1SCA115364R1001	37.0
1000/1000	4	OTM1000E4M230C	1SCA115368R1001	42.0
1250/1250	2	OTM1250E2M230V	1SCA121193R1001	32.4
1250/1250	3	OTM1250E3M230C	1SCA115365R1001	37.0
1250/1250	4	OTM1250E4M230C	1SCA115367R1001	42.0
1600/1250	3	OTM1600E3M230C	1SCA115366R1001	39.0
1600/1250	4	OTM1600E4M230C	1SCA115369R1001	44.0
2000 [1]/-	2	OTM2000E2M230V	1SCA121201R1001	32.4
2000 [1]/-	3	OTM2000E3M230C	1SCA115372R1001	47.0
2000 [1]/-	4	OTM2000E4M230C	1SCA115374R1001	55.0
2500 [1]/-	2	OTM2500E2M230V	1SCA121195R1001	32.4
2500 [1]/-	3	OTM2500E3M230C	1SCA115373R1001	47.0
2500 [1]/-	4	OTM2500E4M230C	1SCA115375R1001	55.0

[1] Category B, infrequent operation
2 pole versions, motor voltage U_e 220...240 V AC/DC

Handle and bolt kits included as standard

Suitable for switch disconnectors	Handle+shaft kit	Bolt kit
OTM160...250	OTV250EMK	M8x25
OTM315...400	OTV400EMK	M10X30
OTM630...800	OTV800EMK	M12X40

Motorized switch-disconnectors, IEC

Ordering information



OTM1000...1250E3M_



OTM1600E3M_

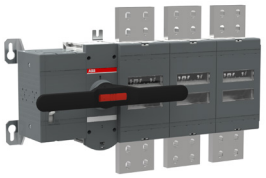

OTM2000...2500EM_

Motorized switch-disconnectors OTM, IEC

Including a handle for manual operation, bolt kit with nut and washers for all terminals, male connectors for control circuit and a handle and spare fuse storage clip.
Type codes for motor voltage 220...240V AC/DC, see table below.
IEC type with standard phase distance.

Rated current AC-22A ≤ 690 V A	Number of poles	Type	Order code	Weight/ unit kg
1000/1000	2	OTM1000E2M230V	1SCA121396R1001	32.4
1000/1000	3	OTM1000E3M230C	1SCA115364R1001	37.0
1000/1000	4	OTM1000E4M230C	1SCA115368R1001	42.0
1250/1250	2	OTM1250E2M230V	1SCA121193R1001	32.4
1250/1250	3	OTM1250E3M230C	1SCA115365R1001	37.0
1250/1250	4	OTM1250E4M230C	1SCA115367R1001	42.0
1600/1250	3	OTM1600E3M230C	1SCA115366R1001	39.0
1600/1250	4	OTM1600E4M230C	1SCA115369R1001	44.0
2000 [1]/-	2	OTM2000E2M230V	1SCA121201R1001	32.4
2000 [1]/-	3	OTM2000E3M230C	1SCA115372R1001	47.0
2000 [1]/-	4	OTM2000E4M230C	1SCA115374R1001	55.0
2500 [1]/-	2	OTM2500E2M230V	1SCA121195R1001	32.4
2500 [1]/-	3	OTM2500E3M230C	1SCA115373R1001	47.0
2500 [1]/-	4	OTM2500E4M230C	1SCA115375R1001	55.0
3800/-	3	OTM3200E3M230C	1SCA129196R1001	47.0
3800/-	4	OTM3200E4M230C	1SCA129198R1001	55.0
4000/-	3	OTM4000E3M230C	1SCA129195R1001	51.0
4000/-	4	OTM4000E4M230C	1SCA129197R1001	61.0

[1] Category B, infrequent operation
2 pole versions, motor voltage U_e 220...240 V AC/DC

Handle and bolt kits included as standard

Suitable for switch disconnectors	Handle+shaft kit	Bolt kit
OTM1000...1250	OTV1000EMK	M12X50
OTM1600...2500	OTV1000EMK	M12X60

Motorized switch-disconnectors, IEC

Ordering information



OTM160...250E3WM_



OTM160...250E4WM_

Motorized switch-disconnectors OTM with wide phase distance, IEC

Including a handle for manual operation, bolt kit with nut and washers for all terminals, male connectors for control circuit and a handle and spare fuse storage clip.
Type codes for motor voltage U_e = 220...240 V AC/DC, see table below.

Rated current AC-22A ≤ 690 V A	Number of poles	Type	Order code	Weight/ unit kg
160/160	3	OTM160E3WM230C	1SCA115286R1001	4.7
160/160	4	OTM160E4WM230C	1SCA115295R1001	5.1
200/200	2	OTM200E2WM230V	1SCA121187R1001	4.3
200/200	3	OTM200E3WM230C	1SCA115288R1001	4.7
200/200	4	OTM200E4WM230C	1SCA115296R1001	5.1
250/250	2	OTM250E2WM230V	1SCA121188R1001	4.3
250/250	3	OTM250E3WM230C	1SCA115289R1001	4.7
250/250	4	OTM250E4WM230C	1SCA115297R1001	5.1
4000/-	3	OTM4000E3W8M230C	1SCA129218R1001	51.5
4000/-	4	OTM4000E3W8M230C	1SCA129218R1001	51.5

2 pole versions, motor voltage U_e 220...240 V AC/DC

Handle and bolt kits included as standard

Suitable for switch disconnectors	Handle+shaft kit	Bolt kit
OTM160...250	OTV250EMK	M8x25

Motorized switch-disconnectors

Dimensional drawings

Motorized switch-disconnectors, base mounting, IEC

OTM40...125F_M

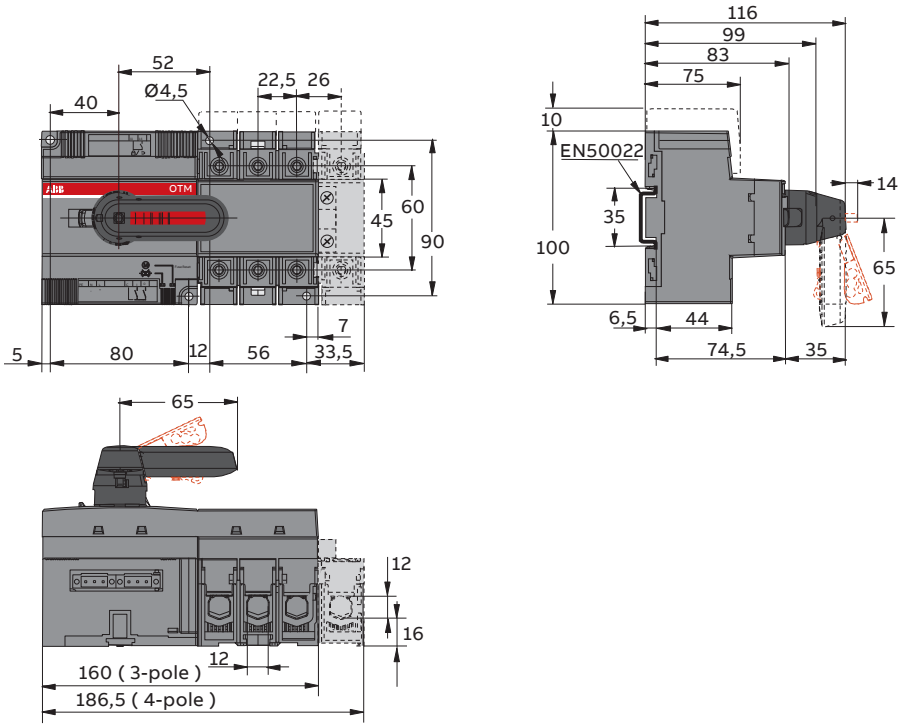

M00353/OTM30-125F_M B

Main dimensions mm

Motorized switch-disconnectors

Dimensional drawings

Motorized switch-disconnectors, base mounting, IEC

OTM160...250E_M

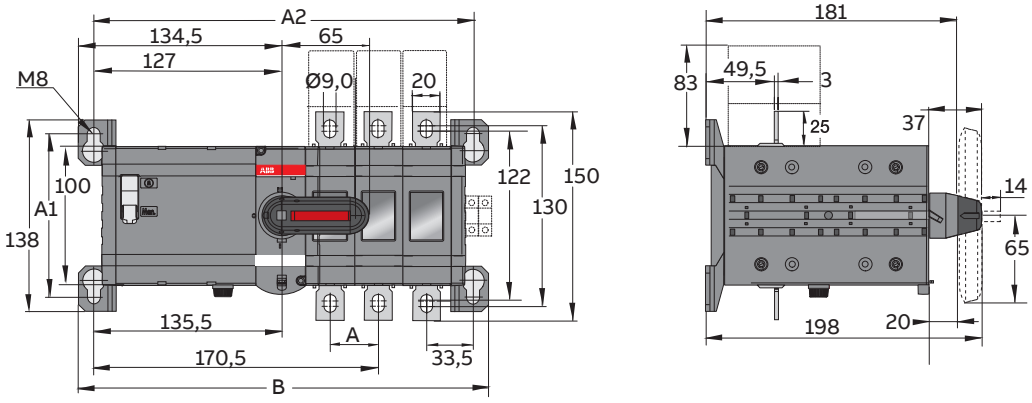

OTM160-250_M			
[mm]	E2	E3	E4
A	35	35	35
A1	118	118	118
A2	239	274	309
B	261	296	331

M00276/OTM160-250E2_4 B

OTM315...400E_M

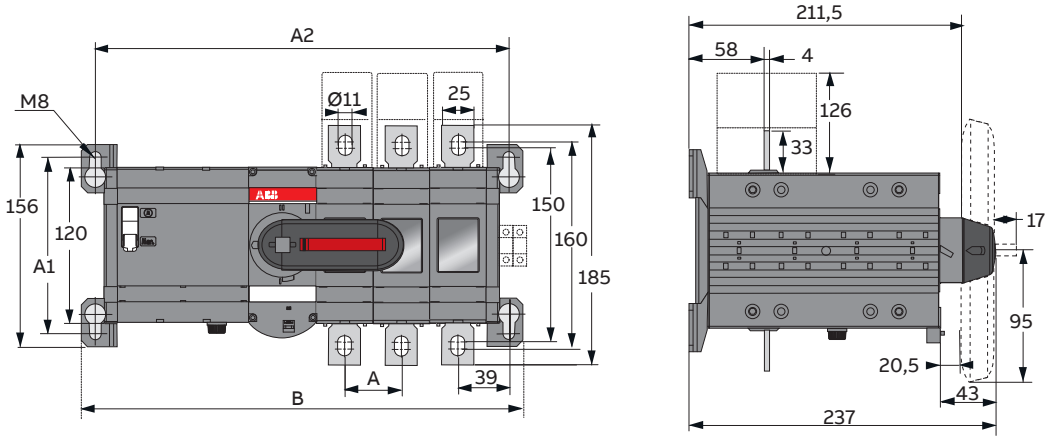

OTM315-400_M			
[mm]	E2	E3	E4
A	44	44	44
A1	136	136	136
A2	276	320	364
B	298	342	386

M00278/OTM315-400E2_4 B

Main dimensions mm

Motorized switch-disconnectors

Dimensional drawings

Motorized switch-disconnectors, base mounting, IEC

OTM630...800E_M

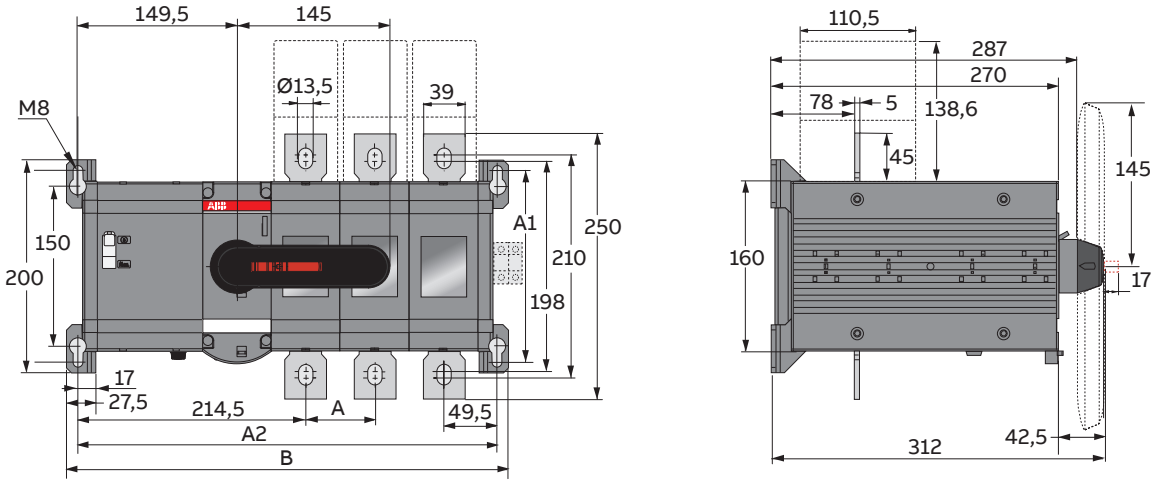

OTM630-800E_M			
[mm]	E2	E3	E4
A	65	65	65
A1	180	180	180
A2	329	394	459
B	350	415	480

M00281/OTM630-800E2_4 B

OTM1000...1250E_M

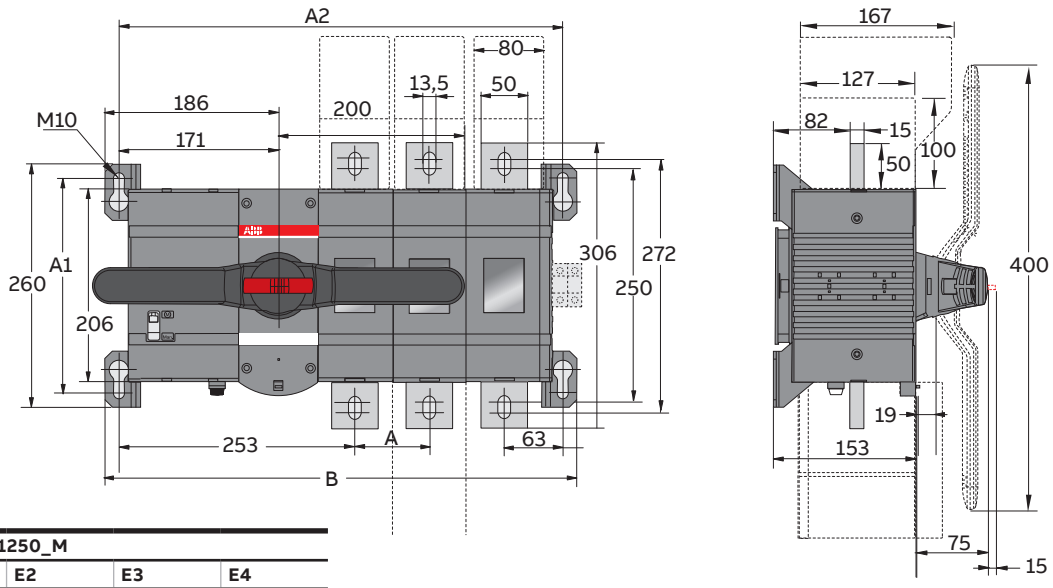

OTM1000-1250_M			
[mm]	E2	E3	E4
A	80	80	80
A1	230	230	230
A2	396,5	476,5	556,5
B	426,5	506,5	586,5

M00282/OTM1000-1250E_M B

Main dimensions mm, inches

Motorized switch-disconnectors

Dimensional drawings

Motorized switch-disconnectors, base mounting, IEC

OTM1600E_M

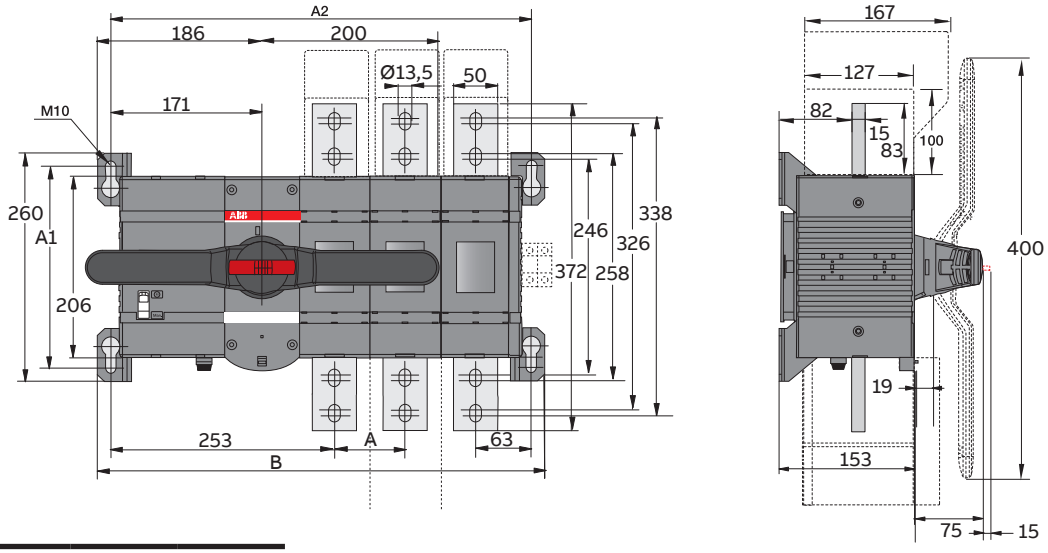

OTM1600E_M			
[mm]	**E2**	**E3**	**E4**
A	80	80	80
A1	230	230	230
A2	396,5	476,5	556,5
B	426,5	506,5	586,5

M00283/OTM1600E_M B

OTM2000...2500E_M

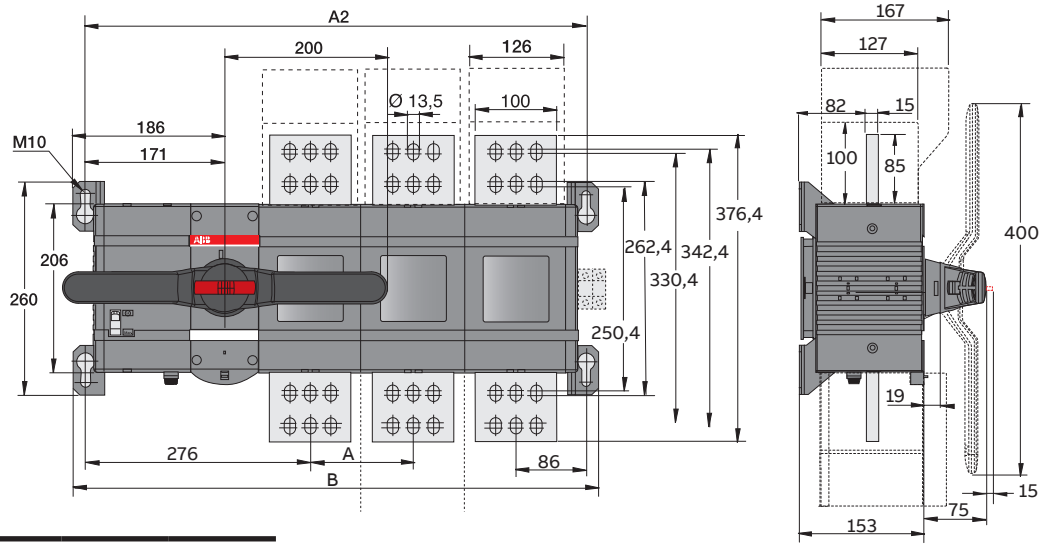

OTM2000-2500_M			
[mm]	**E2**	**E3**	**E4**
A	126	126	126
A1	230	230	230
A2	488,5	614,5	740,5
B	518,5	644,5	770,5

M00285/O TM2000_2500E_M B

Main dimensions mm, inches

Motorized switch-disconnectors

Dimensional drawings

Motorized switch-disconnectors, base mounting, IEC

OTM3200...4000_M

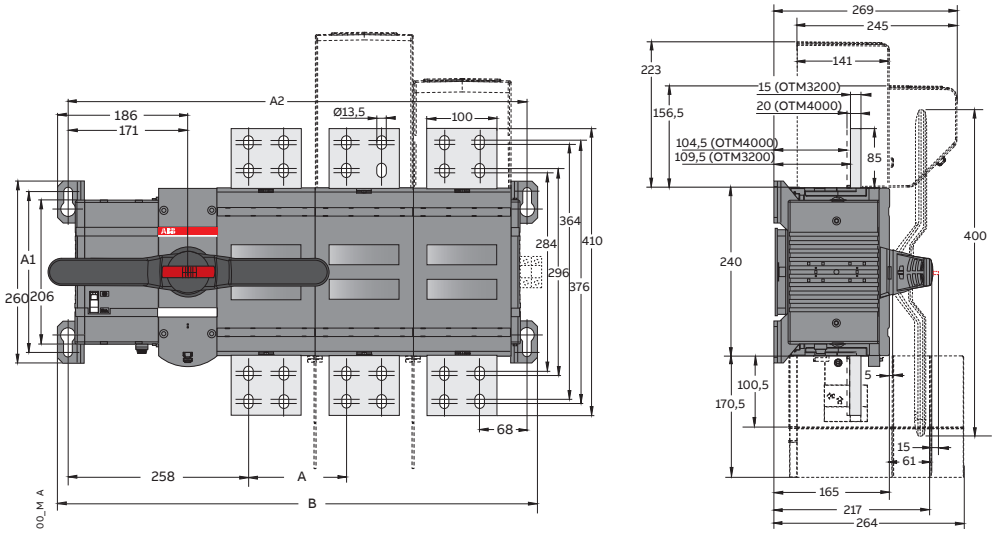

OTM3200-4000-M		
[mm]	**E3**	**E4**
A	140	140
A1	230	230
A2	656.5	796.5
B	686.5	826.5

M00433/OTM3200-4000_M A

Main dimensions mm, inches

Motorized switch-disconnectors

Dimensional drawings

Motorized switch-disconnectors with wide phase distance, base mounting, IEC

OTM160...250E_WM

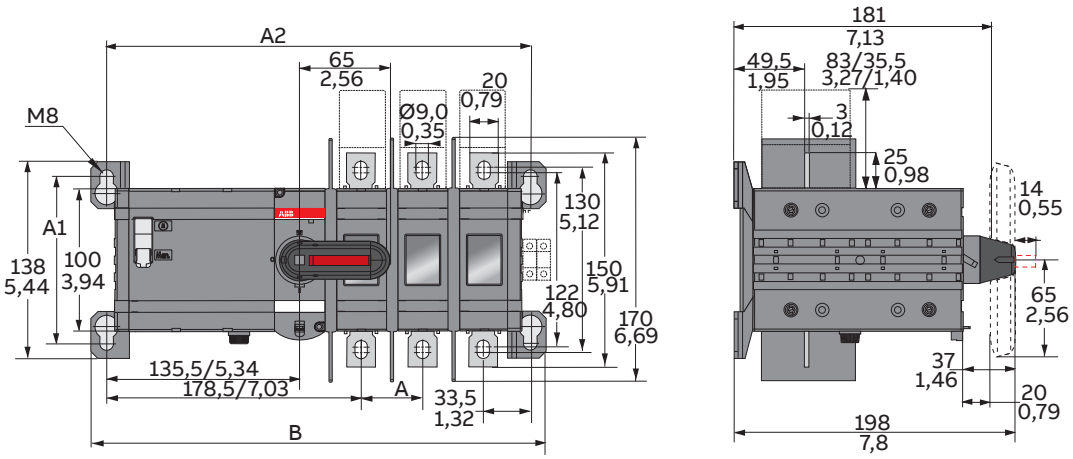

OTM160-250_WM			
[mm]	E2W	E3W	E4W
A	43/1,69	43/1,69	43/1,69
A1	118/4,65	118/4,65	118/4,65
A2	255/10,05	298/11,74	341/13,43
B	277/10,91	320/12,61	363/14,3

M07014/OTM160...250E_WM2_4 A

OTM_3200...4000_W8M

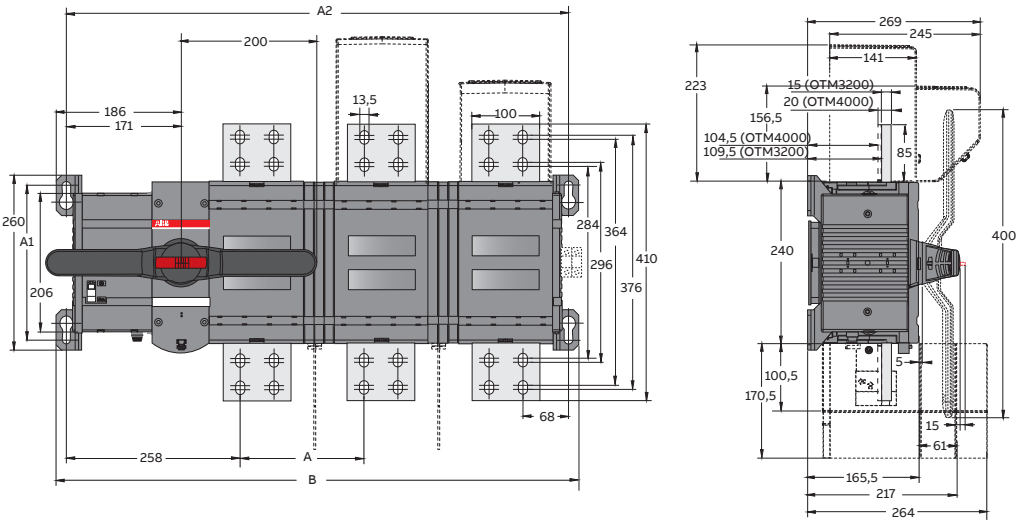

OTM3200-4000_W8M		
[mm]	E3	E4
A	185	185
A1	230	230
A2	746.5	931.5
B	776.5	961.5

M00434/OTM3200-4000_W8M A

Main dimensions mm, inches

Accessories for motorized switch-disconnectors

Ordering information for handle accessories



OTV250EMK



OTV1000EMK



OTVS2

Direct mount handles

Includes a shaft and a mechanism cover. Indication OFF-ON / O-I. Padlockable with three padlocks in OFF-position. Includes also microswitch.

Suitable for switches	Colour	Handle length mm	Type	Order number	Weight/ type kg
OTM160…250	Black	65	OTV250EMK	1SCA104736R1001	0.09
OTM315…400	Black	95	OTV400EMK	1SCA104737R1001	0.21
OTM630…800	Black	145	OTV800EMK	1SCA104738R1001	0.27
OTM1000…2500	Black	2x200	OTV1000EMK	1SCA111300R1001	0.68

Handle and spare fuse storage clip for motorized switches OTM_

OTM40...125, the handle can be stored in the handle storage clip OTVS0. The clip can be fixed to a panel frame using the included adhesive tape. OTM160…4000, the handle and two spare fuses can be stored in the OTVS1 and OTVS2. OTVS1 and OTVS2 can be installed onto the left side of the motorized switch-disconnector OTM. Snap-on mounting, no tools required. On OTM1000...4000E_, the size of the handle prevents the installation onto the switch frame. However, the handle clip can be installed separately onto the panel frame and the fuse holder clip onto the switch frame.

Suitable for switches	Type	Order code	Weight/ type kg
OTM40...125F	OTVS0	1SCA117524R1001	0.02
OTM160...250E	OTVS1	1SCA111413R1001	0.02
OTM315...4000E	OTVS2	1SCA111414R1001	0.04

Accessories for motorized switch-disconnectors

Ordering information for auxiliary contacts



OA1G10, OA8G01, OA3G01



OA2G11

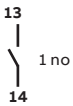

1NO

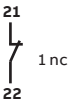

1NC

Auxiliary contacts for OTM40...4000, IP20

Contact numbering according to EN 50013. Types _AU have gold plated contacts for harsh environments and low operating voltages. Auxiliary contacts are mountable on right side in types OTM40...4000 or under the mechanism cover in types OTM160...4000. Early break type auxiliary contacts means that in the switches, the NO aux.contacts break before the main contacts open.

In types with auxiliary contacts mountable under the mechanism cover, the “test” contacts operate in ON- and OFF-positions as well as when the handle is turned to TEST-position (45° over the OFF-position). The “test indication” contacts operate only when the handle is turned to TEST-position. The OA1G10 (N.O.) or OA3G01 (N.C.) auxiliary contact blocks can be used as standard auxiliary contacts, “test” or “test indication” contacts. The desired functions are achieved when an auxiliary contact block is installed in a specific place.

See next pages for performance data, functions and contact timing.

Suitable for switches	Function	Type	Order code	Weight/ unit kg
Mounting on the right side OTM40...125				
Maximum 2 auxiliary contact blocks, snap-on mounting				
OTM40...125	1NO, early break	OA1G10	1SCA022353R4970	0.03
OTM40..125	1NC, early make	OA8G01	1SCA022744R2240	0.03
OTM40...125	1NO, early break	OA1G10AU	1SCA022436R7910	0.03
OTM40...125F3	1NO+1NC, simultaneous function with the main contacts	OA2G11	1SCA022379R8100	0.03
Mounting on the right side OTM160...4000:				
Maximum 2+2 auxiliary contact blocks (N.O. or N.C.), snap-on mounting.				
OTM160...4000	1NO, early break	OA1G10	1SCA022353R4970	0.03
OTM160...4000	1NC, early make	OA3G01	1SCA022456R7410	0.03
OTM160...4000	1NO, early break	OA1G10AU	1SCA022436R7910	0.03
OTM160...4000	1NC, early make	OA3G01AU	1SCA022819R5260	0.03
Mounting under the mechanism cover OTM160...4000:				
See next page for maximum number of contact blocks, “Aux./test” contacts and “test indication”.				
OTM160...4000	1NO, early break	OA1G10	1SCA022353R4970	0.03
OTM160...4000	1NC, early make	OA3G01	1SCA022456R7410	0.03
OTM160...4000	1NO, early break	OA1G10AU	1SCA022436R7910	0.03
OTM160...4000	1NC, early make	OA3G01AU	1SCA022819R5260	0.03

Mounting under the mechanism cover, OTM160...4000:	Maximum number of contact blocks	Aux./Test contacts	Test indication contacts
OTM160...250	2	2	-
OTM315...400	4	-	2
OTM630...800	4	-	2
OTM 1000...4000	6	2 [1)]	4

[1)] Early operation test contact

Accessories for motorized switch-disconnectors

Technical data for auxiliary contacts

Performance data of auxiliary contacts according to IEC 60947-5-1

For OA1G_, OA2G_, OA3G_, OA8G_

AC15		**DC12**			**DC13**	
U_e V AC	**I_e** A	**U_e** V DC	**I_e** A	**P** W	**I_e** A	**P** W
230	6	24	10	240	2	50
400	4	72	4	290	0.8	60
415	4	125	2	250	0.55	70
690	2	250	0.55	140	0.27	70
		440	0.1	44		

For OA1G_, OA2G_, OA3G_, OA8G_

U_i	690 V
U_{imp}	4 kV
Pollution degree	3
I_{th}	16 A
Cable size	1...2 x 0.75...2.5 mm², use pin-head terminals for other wire sizes
Maximum fuse	16 A / gG
NEMA	A600, R300, wire size: 18 - 14 AWG, 1(2)

Accessories for motorized switch-disconnectors

Technical data for auxiliary contacts

Function table of OTM160...4000 auxiliary contacts

Handle position	Main contacts	Aux./Test contacts N.O.	Test indication contacts N.O.
Test	open	closed	closed
0	open	open	open
I	closed	closed	open

Handle indications and functions

- The handle indicates the position of the main contacts of the switch with complete reliability in all situations. If the contacts are welded together, the handle does not reach the OFF-position but remains between ON and OFF, maintaining the door interlock and preventing padlocking.
- When operating the switch to the TEST-position with a test handle, the test auxiliary contacts change position. The main contacts remain open.

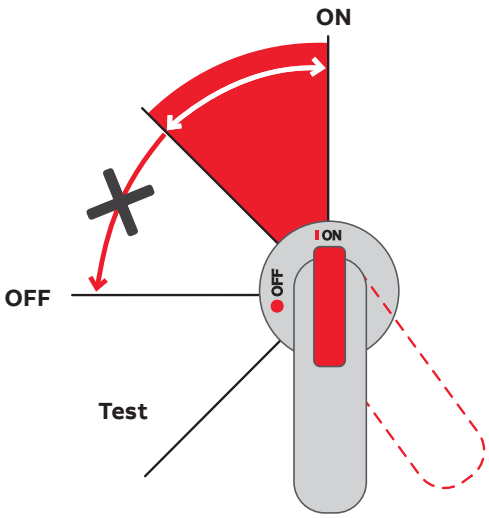

ON and OFF-functions of main and auxiliary contacts

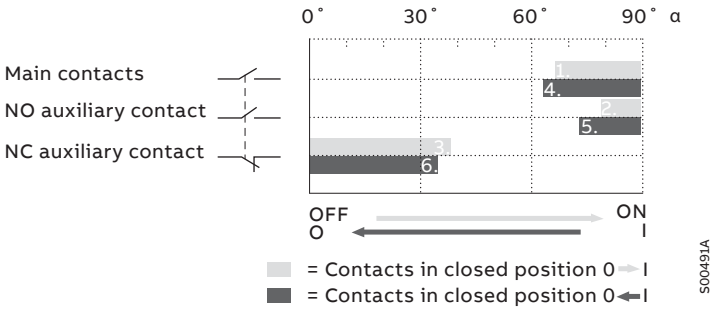

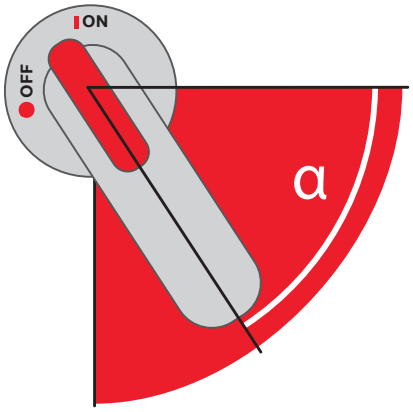

Closing:
1. Main contacts close
2. NO auxiliary contacts close
3. NC auxiliary contacts open

Opening:
4. Main contacts open
5. NO auxiliary contacts open
6. NC auxiliary contacts close

Accessories for motorized switch-disconnectors

Ordering information for fourth poles, neutral and earth terminals



OTPS60FP

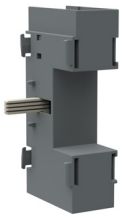

OTPS125FD



OTPE125FP



OXN250



OXN400



OXN1250T

Fourth poles, simultaneous function with the main contacts

Mountable on the side of the 3-pole switch without wide phase distances.

Suitable for switches	Type	Order code	Weight/ unit kg
OTM40	OTPS60FP	1SCA111009R1001	0.14
OTM63...125	OTPS125FP	1SCA105099R1001	0.30

Fourth poles, late-break and early-make

Mountable on the side of the switch.

Suitable for switches	Type	Order code	Weight/ unit kg
OTM40	OTPL60FP	1SCA111004R1001	0.14
OTM63...125	OTPL125FP	1SCA105090R1001	0.30

*) N1=On the left side of the switch
N2=On the right side of the switch

Fixed neutral

Mountable on the side of the switch.

Suitable for switches	Type	Order code	Weight/ unit kg
OTM40	OTPN60FP	1SCA117606R1001	0.14
OTM63...125	OTPN125FP	1SCA105090R1001	0.30

Protective earth

Mountable on the side of the switch.

Suitable for switches	Type	Order code	Weight/ unit kg
OTM40	OTPE60FP	1SCA111016R1001	0.14
OTM63...125	OTPE125FP	1SCA105090R1001	0.30

Neutral links

Detachable, mountable separately to the base plate

Suitable for switches	I_{th} A	Type	Order code	Weight/ unit kg
OTM160...250	250	OXN250	1SCA022752R9950	0.26
OTM315...400	400	OXN400	1SCA022770R3060	0.70
OTM630...800	800	OXN800T	1SCA022829R0840	0.96
OTM1000...2500	1250	OXN1250T	1SCA104162R1001	2.20

Accessories for motorized switch-disconnectors

Ordering information for terminal shrouds



OTS125T3



OTS125T1



OTS400G1S



OTS800G1S



OTS1600G1L



OTS1600G1S



OTS2500G1L



OTS2500G1S



OTS4000G1S/3



OTS4000G1S/4

Terminal shrouds for OTM switches, snap-on mounting, transparent

Suitable for switches	Type	Order code	Weight/unit kg
OTM40...125, 3 pole	OTS125T3	1SCA022379R9680	0.01
OTM40...125, for fourth pole	OTS125T1	1SCA022379R9760	0.01

Terminal shrouds for OTM switches, snap-on mounting, grey

Pack of single pole shrouds, IP3X.

Suitable for switches	Description	Type	Order code	Units/type pcs	Weight/unit kg
For 3-pole OTM switches					
OTM160...250	Long type	OTS250G1L/3	1SCA022731R8150	3	0.09
	Short type	OTS250G1S/3	1SCA022731R8310	3	0.06
OTM315...400	Long type	OTS400G1L/3	1SCA022736R8840	3	0.15
	Short type	OTS400G1S/3	1SCA022736R9060	3	0.09
OTM630...800	Long type	OTS800G1L/3	1SCA022776R7890	3	0.32
	Short type	OTS800G1S/3	1SCA022776R8190	3	0.17
OTM1000...1600	Long type	OTS1600G1L/3	1SCA022871R9510	3	0.60
	Short type	OTS1600G1S/3	1SCA022871R9600	3	0.40
OTM2000...2500	Long type	OTS2500G1L/3	1SCA107261R1001	3	1.00
	Short type	OTS2500G1S/3	1SCA107260R1001	3	0.50
OTM3200...4000	Long type	OTS4000G1L/3	1SCA129042R1001	3	1.0
	Short type	OTS4000G1S/3	1SCA129044R1001	3	1.2
For 4-pole OTM switches					
OTM160...250	Long type	OTS250G1L/4	1SCA022731R8230	4	0.12
	Short type	OTS250G1S/4	1SCA022731R8400	4	0.08
OTM315...400	Long type	OTS400G1L/4	1SCA022736R9490	4	0.20
	Short type	OTS400G1S/4	1SCA022736R9650	4	0.12
OTM630...800	Long type	OTS800G1L/4	1SCA022776R7970	4	0.42
	Short type	OTS800G1S/4	1SCA022776R8270	4	0.26
OTM1000...1600	Long type	OTS1600G1L/4	1SCA022871R9780	4	0.80
	Short type	OTS1600G1S/4	1SCA022871R9860	4	0.50
OTM2000...2500	Long type	OTS2500G1L/4	1SCA107262R1001	4	1.30
	Short type	OTS2500G1S/4	1SCA107271R1001	4	0.70
OTM3200...4000	Long type	OTS4000G1L/4	1SCA129043R1001	4	1.4
	Short type	OTS4000G1S/4	1SCA129045R1001	4	1.6

Accessories for motorized switch-disconnectors

Ordering information terminal clamps


OZXT1


OZXT6

Terminal clamp sets for Al- and Cu-cables, insulated versions

Suitable for switches	Cable cross section mm²	Type	Order code	Units/ type pcs	Weight/ unit kg
OTM40…125	16…50 Al, 2.5…50 Cu	OZXT1 **)	1SCA022469R6310	3	0.05
OTM63…125	2x(16…50) Al/Cu	OZXT3	1SCA022639R0720	3	0.21
Including 0.75…2.5 mm² voltage sensing connection. Voltage sensing wires are not included					
OTM40…125	16…50 Al/2.5…50 Cu	OZXT6	1SCA122537R1001	3	0.06

**) In=63 A


OZXB1L


OZXB2


OZXB2L


OZXB3


OZXB4


OZXB7


OZXB8


OZXB9

Terminal clamp sets for Al- and Cu-cables

All terminal clamp deliveries include a 6 piece bolt set:
OZXE51 (M8x25), OZXE54 (M10x30) and OZXE3 (M12x40)

Suitable for switches	Cable cross section mm²	Suitable shroud type	Terminal clamp type	Order code	Units/ type pcs	Weight/ unit kg
OTM40…125	10…70		OZXL1	1SCA022439R6770	3	0.14
	10…70		OZXL1/1	1SCA022469R6220	1	0.05
OZXB type Al/Cu connectors made of stainless steel						
OTM160EV…250	10…70	OTS250_L	OZXB1L	1SCA022169R2030	3	0.15
	10…70	OTS250_L	OZXB1L/1	1SCA022194R0030	1	0.05
	25…120	OZXB2K	OZXB2	1SCA022119R7610	3	0.34
	25…120	OZXB2K	OZXB2/1	1SCA022194R0200	1	0.12
	25…120	OZXB2K	OZXB2L	1SCA022158R7750	3	0.43
	25…120	OZXB2K	OZXB2L/1	1SCA022194R0460	1	0.15
	95…185	OTS250_L	OZXB8	1SCA022744R1510	3	0.50
	95…185	OTS250_L	OZXB8/1	1SCA022744R1600	1	0.15
	95…240	OTS250_L	OZXB9	1SCA022750R3210	3	0.50
	95…240	OTS250_L	OZXB9/1	1SCA022750R3300	1	0.14
OTM315…400	25…120	OZXB2K	OZXB2L	1SCA022158R7750	3	0.43
	25…120	OZXB2K	OZXB2L/1	1SCA022194R0460	1	0.15
	95…185	OZXB3K	OZXB3	1SCA022136R8100	3	1.28
	95…185	OZXB3K	OZXB3/1	1SCA022194R0620	1	0.13
	2x(95…185)	OZXB3K	OZXB4	1SCA022137R4760	3	1.71
	2x(95…185)	OZXB3K	OZXB4/1	1SCA022194R0890	1	0.60
	120…240	OZXB5K	OZXB7	1SCA022185R0040	3	1.00
	120…240	OZXB5K	OZXB7/1	1SCA022194R1430	1	0.34
	120…240	OZXB5K	OZXB7L	1SCA022185R7130	3	1.20
	120…240	OZXB5K	OZXB7L/1	1SCA022194R1600	1	0.39
	95…185	OTS400_L	OZXB8	1SCA022744R1510	3	0.50
	95…185	OTS400_L	OZXB8/1	1SCA022744R1600	1	0.15
	95…240	OTS400_L	OZXB9	1SCA022750R3210	3	0.50
	95…240	OTS400_L	OZXB9/1	1SCA022750R3300	1	0.14
OTM630…800	120…300	OZXB4K	OZXB5	1SCA022137R2470	3	2.22
	120…300	OZXB4K	OZXB5/1	1SCA022194R1010	1	0.80
	2x(120…300)	OZXB4K	OZXB6	1SCA022137R4920	3	3.03
	2x(120…300)	OZXB4K	OZXB6/1	1SCA022194R1270	1	1.00

Accessories for motorized switch-disconnectors

Ordering information for terminal clamps



OZXB3



OZXB4



OZXB5



OZXB6



OZXB7L

Terminal clamp sets for Al- and Cu-cables

Suitable for switches	Cable cross section mm²	Suitable shroud type	Terminal clamp type	Order code	Units/ type pcs	Weight/ unit kg
OZXB type Al/Cu connectors made of stainless steel						
OTM1000...1600	95...185	OTS1600_L	OZXB3	1SCA022136R8100	3	1.28
	95...185	OTS1600_L	OZXB3/1	1SCA022194R0620	1	0.13
	2x(95...185)	OTS1600_L	OZXB4	1SCA022137R4760	3	1.71
	2x(95...185)	OTS1600_L	OZXB4/1	1SCA022194R0890	1	0.60
	120...300	OTS1600_L	OZXB5	1SCA022137R2470	3	2.22
	120...300	OTS1600_L	OZXB5/1	1SCA022194R1010	1	0.80
	2x(120...300)	OTS1600_L	OZXB6	1SCA022137R4920	3	3.03
	2x(120...300)	OTS1600_L	OZXB6/1	1SCA022194R1270	1	1.00
	120...240	OTS1600_L	OZXB7L	1SCA022185R7130	3	1.20
	120...240	OTS1600_L	OZXB7L/1	1SCA022194R1600	1	0.39
OTM2000...2500	95...185	OTS2500_L	OZXB3	1SCA022136R8100	3	1.28
	95...185	OTS2500_L	OZXB3/1	1SCA022194R0620	1	0.13
	2x(95...185)	OTS2500_L	OZXB4	1SCA022137R4760	3	1.71
	2x(95...185)	OTS2500_L	OZXB4/1	1SCA022194R0890	1	0.60
	120...300	OTS2500_L	OZXB5	1SCA022137R2470	3	2.22
	120...300	OTS2500_L	OZXB5/1	1SCA022194R1010	1	0.80
	2x(120...300)	OTS2500_L	OZXB6	1SCA022137R4920	3	3.03
	2x(120...300)	OTS2500_L	OZXB6/1	1SCA022194R1270	1	1.00
	120...240	OTS2500_L	OZXB7L	1SCA022185R7130	3	1.20
	120...240	OTS2500_L	OZXB7L/1	1SCA022194R1600	1	0.39

Find out more

Webpage: Motor operated switch-disconnectors



Webpage: Manual operated switch-disconnectors



Catalog: Safety switches and enclosed switch-disconnectors



Document ID: 1SCC340015C0201

Video: Auxiliary contacts installation



Video: Installation of OEA28 – Module for auxiliary contacts

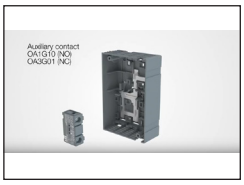

ABB Oy
Smart Power
P.O. Box 622
FI-65101 Vaasa, Finland

You can find the address of your local sales organization on the ABB home page

https://new.abb.com/low-voltage

https://new.abb.com/low-voltage/products/connection-devices

We reserve the right to make technical changes or modify the contents of this document without prior notice. ABB does not accept any responsibility whatsoever for potential errors or possible lack of information in this document.

We reserve all rights in this document and in the subject matter and illustrations contained therein. Any reproduction, disclosure to third parties or utilization of its contents – in whole or in parts – is forbidden without prior written consent of ABB.

Copyright© 2022 ABB - All rights reserved

1SCC301020C0201_22-09