ITW Switches

SERIES 19N - SNAP ACTION SWITCH

The miniature Snap Action switch (the standard V4 size) has been designed in line with similar competitive products, but because of automation, offers consistent high quality levels for volume applications, at no extra cost. The switch mechanism used is the well proven spring and blade method, and is offered in a choice of operating forces.

Other standard options include gold or silver contacts; PCB, solder or QC terminals, and integral wire lead versions. All versions have a sealed base right up to the button opening. In addition, sealed button versions are totally environmentally sealed.



Applications:

- Telephone handsets
- Automotive controls
- Joysticks
- Security/anti-tamper uses
- Small motor limit switches
- Business machines
- Thermostat and sensor controls

Key Features:

- Insert moulded terminals
- Fully sealed option – to IP67
- Wide temperature range
- Choice of actuators as standard
- Approved product – BEAB
- Non flammable switch – UL94-VO rated

Non-Standard Options:

- Leaf lever available in variable lengths (see ordering information)
- Custom levers/brackets
- Multiple pole 'ganged' versions

Sealed Variants:

This variant is available in two versions, fully sealed and top sealed. The top seal incorporates a rubber seal around the button to stop the ingress of contaminants through this area. If the switch is to be activated by a cam, it would be advisable to do this via a lever, as using a cam directly onto the button can cause damage to the diaphragm seal.

The fully sealed version has the top seal and also has integral leads 'potted' onto the terminals. This version is rated at 125°C. There is also a derated version, to 105°C, available. This has the advantage of being lower cost than the standard version. If you should require more information on this version please contact the Sales Office.

APPROVALS:

BEAB

PCB LAYOUT (VIEWED FROM EITHER SIDE):

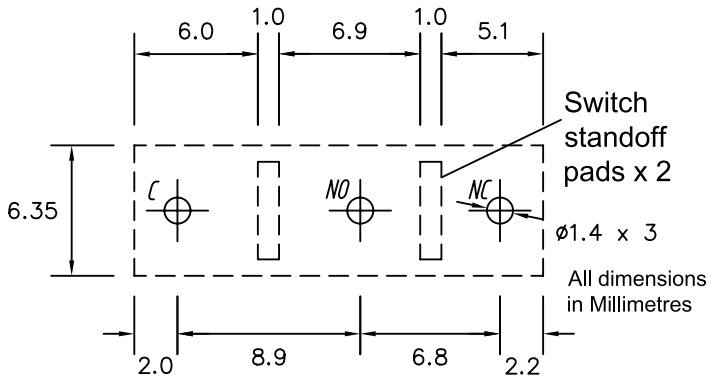

SEALED VARIANTS:

This variant is available in two versions, fully sealed and top sealed. The top seal incorporates a rubber seal around the button to stop the ingress of contaminants through this area. If the switch is to be activated by a cam, it would be advisable to do this via a lever, as using a cam directly onto the button can cause damage to the diaphragm seal.

The fully sealed version has the top seal and also has integral leads 'potted' onto the terminals. This version is rated at 125°C. There is also a derated version, to 105°C, available. This has the advantage of being lower cost than the standard version. If you should require more information on this version please contact the Sales Office.

MOUNTING INFORMATION:

PCB Terminal version

This version mounts directly onto a PCB which has been drilled as illustrated. To ensure a tight fit in the PCB during handling and flow soldering operations, the switch can be inserted into the PCB, and then the terminals may be splayed by 30° in an alternate fashion. The terminals have an in-line rectangular cross section to facilitate this, and to eliminate the reduction of creepage distances in the fitted application.

Solder, QC and flying lead versions

These versions have two mounting holes that accept M2,5 screws (with anti-vibration washers if relevant) tightened to a maximum torque of 0,3Nm. One of the mounting holes is slotted, to allow for a tolerance between the screw centres of ±0,15mm. If the switch is being mounted onto a metal surface, a separating insulator is recommended on the solder and QC versions, to ensure bare wires cannot make electrical contact.

Copyright © 2024. ITW Switches 02/2024

PRODUCT DRAWINGS

Generic

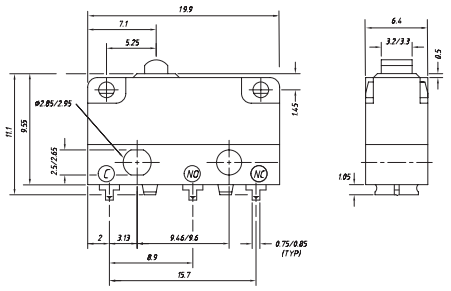

19N7xx -Sealed Version

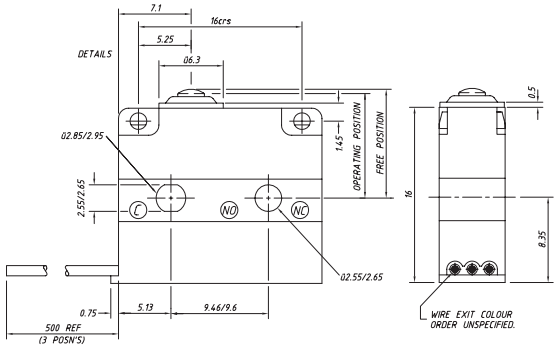

19N4xx - Solder Terminals

Leaf Lever

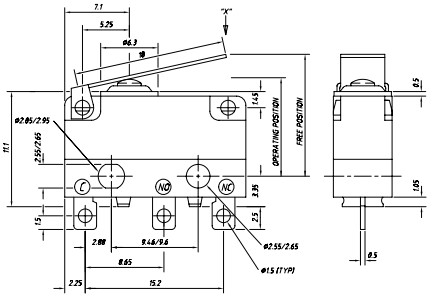

Roller Lever

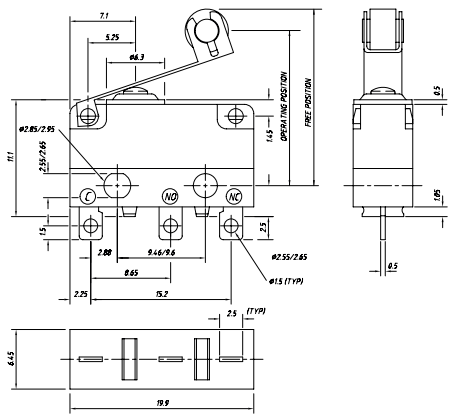

19N5xx - PCB Terminals

Leaf Lever

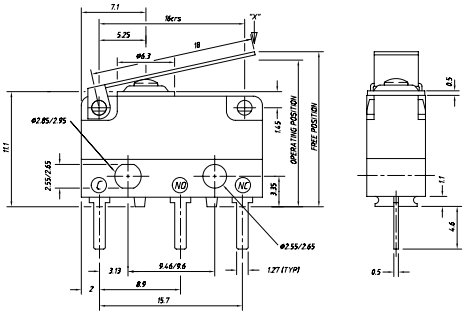

Roller Lever

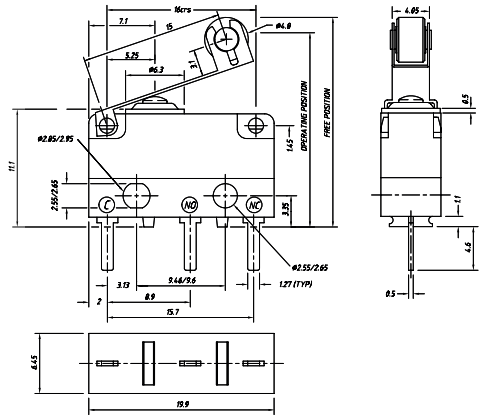

19N6xx - QC Terminals

Leaf Lever

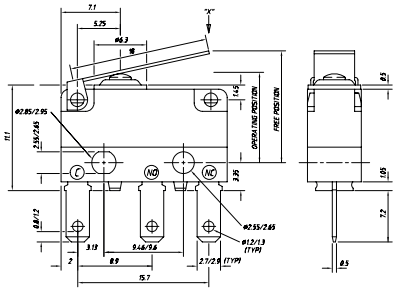

Roller Lever

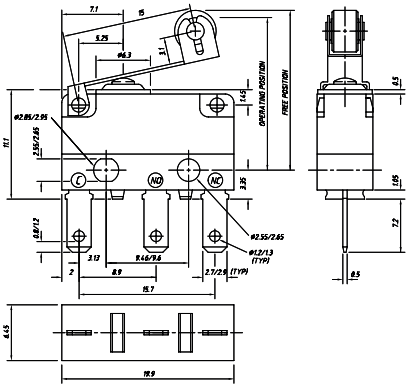

All dimensions in Millimetres

Lever Styles

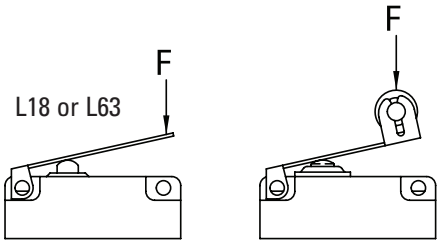

Arrow shows direction of force and point of contact

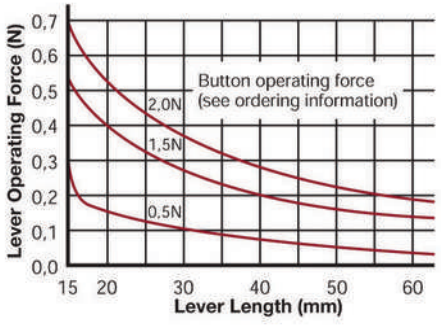

Graph to calculate operating force at end of lever

Contact an Authorized Distributor or Factory for Pricing

BUTTON/LEVER POSITIONS:

Free position (F.P)

Standard switch to mounting holes 9.14 max
Standard switch to PCB 12.35 max
Sealed switch to mounting holes 9.35 max
Leaf lever to mounting holes 12.50 max
Leaf lever to PCB 15.70 max
Roller lever to mounting holes 17.20 max
Roller lever to PCB 20.40 max

Operating point (O.P)

Standard switch to mounting holes 8.40 ±0.40
Standard switch to PCB 11.60 ±0.40
Sealed switch to mounting holes 8.50 ±0.40
Leaf lever to mounting holes 10.15 ±1.37
Leaf lever to PCB 13.38 ±1.37
Roller lever to mounting holes 15.50 ±1.14
Roller lever to PCB 18.25 ±1.14

ENVIRONMENTAL & PHYSICAL CHARACTERISTICS:

Ingress protection:
– with unsealed button -IP40

– with sealed button - IP67

Temperature:
-40°C to +125°C

Button material:
Polyester

Body Material:
Nylon 46

Contacts:
Silver versions:
Silver nickel alloy

Gold versions:
5 microns of gold on copper/nickel

Terminals
Solder & PCB versions:
Tin plated brass

QC versions:
Brass

INGRESS PROTECTION RATING KEY

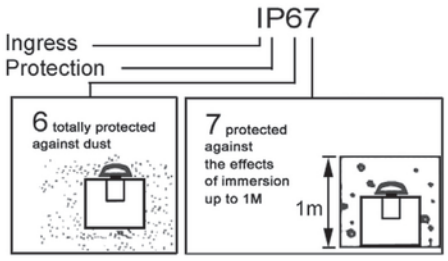

CIRCUIT FORM

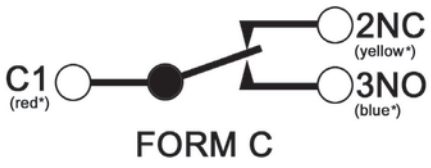

* Colours relate to wires for fully sealed version

ORDERING INFORMATION:

Series:	Terminal Style:	Contact Material:	Button Op / Release Force	Op force	Rel force	Auxiliary Actuator Fitted
19N	4 Solder	0 Silver	1 Unsealed button	0.5N	0.07N	– None fitted
	5 PCB	1 Gold	2 Sealed button	2.0N	0.27N	L18 Standard 18mm leaf lever
	6 QC		3 Unsealed button	1.5N	0.27N	L63 Standard 63mm leaf lever
	7 Integral wire leads					R15 Standard roller lever

19N

* L18/L63 represents that this lever is 18mm or 63mm long (see product drawing). Non standard leaf lever lengths are available in 1mm increments from 18mm to 63mm.

MECHANICAL / ELECTRICAL (@125°C) / CHARACTERISTICS:

Overtravel:
0.2mm (min) depress to case

Movement differential:
0.1mm reference

Mechanical life:
10,000,000 cycles

Operating force:
See ordering information

Current (max) for silver contact versions
(Inductive rating 0,6 PF)

Low operating force:
250V a.c. Resistive 2A
250V a.c. Inductive 1A
28V d.c. Resistive 2,5A
28V d.c. Inductive 1A

Standard operating force:
250V a.c. Resistive 5A
250V a.c. Inductive 1A
28V d.c. Resistive 3A
28V d.c. Inductive 1A

All gold contact versions:
100mA 28 VDC Resistive

Current (min)
All silver contact versions:
10mA 5V d.c. Resistive

All gold contact versions:
1mA 5V d.c. Resistive

Life (nominal) – full load:
100,000 cycles

Dielectric strength:
1000V a.c.

Insulation resistance:
1GΩ

Contact resistance (initial):
20mΩ (max) silver
50mΩ (max) gold

Contact bounce:
5ms (max), 1ms per individual pulse

Soldering Information:
350° max. for 3 seconds

Copyright © 2024. ITW Switches 02/2024