

# *RM* and *RMS*

## Modular fuse holders

for industrial and high speed (uR) for Midget/Ferrule fuses up to 125 A




***RM***
*32 A*




***RMS***
*50 A*




***RMS***
*100 A*

### Function

**RM** and **RMS** are modular fuse disconnect switches for cylindrical fuses. They provide safety disconnection and protection against overloads and short-circuits in any low voltage electrical circuit.

- RM: Non-signalling fuse disconnect switches for fuses without strikers.
- RMS: Fuse disconnect switches with pre-break auxiliary contact, position and blown indication.

### Advantages

**Improved safety**
- Omnipolar and simultaneous breaking.
- High dielectric strength. IP2X protection.

**High breaking capacity**
Protection against overloads and short-circuits thanks to high breaking capacity fuses (100 kA rms).

**Specific format and accessory**
- Modular 45-mm cut-out.
- Interlocking with accessory possible.

### The solution for

> Small outputs

### Strong points

> Improved safety
> High breaking capacity
> Specific format and accessory
> Label holder

### Large range

> Pre-break, please consult us

### Compliance with standards

> UL 4248-1 guide IZLT file E307648
> CSA C22.2 class 3211-37 file 265615
> IEC 60269-2,-1

### Approvals and certifications(1)

*(1) Product reference on request.*



socomec Innovative Power Solutions

# References

## RM - Non-signalling device

| Basic device<br>Fuse size | 32 A(1)<br>10 x 38 | | 50 A(2)<br>14 x 51 | | 100 A (2)<br>22 x 58 | |
|---|---|---|---|---|---|---|
| No. of poles | To be ordered in multiples of | Reference | To be ordered in multiples of | Reference | To be ordered in multiples of | Reference |
| 1 P | 12 | 5701 **0015** | 6 | 5702 **5001** | 6 | 5703 **5001** |
| 1 P + N (1 module) | 12 | 5601 **5005** | | | | |
| 1 P + N (2 modules) | 6 | 5701 **0017** | 3 | 5702 **5005** | 3 | 5703 **5005** |
| 1 P LED signalling | 12 | 5701 **0011** | 6 | 5702 **0011** | 6 | 5703 **0011** |
| 2 P | 6 | 5701 **0020** | 3 | 5702 **5002** | 3 | 5703 **5002** |
| 3 P | 4 | 5701 **0018** | 2 | 5702 **5003** | 2 | 5703 **5003** |
| 3 P + N | 3 | 5701 **0019** | 1 | 5702 **5004** | 1 | 5703 **5004** |
| 4 P | | | 1 | 5702 **5006** | 1 | 5703 **5006** |
| N | 12 | 5701 **0016** | 6 | 5702 **5000** | 6 | 5703 **5000** |

*(1) Devices are cURus and CSA-certified, except 5601 5005.*
*(2) Devices are cURus-certified.*

## RMS - Device with 1 signalling auxiliary contact (AC) (1)

| Basic device<br>Fuse size | 50 A(2)<br>14 x 51 | | 100 A (2)<br>22 x 58 | |
|---|---|---|---|---|
| No. of poles | To be ordered in multiples of | Reference | To be ordered in multiples of | Reference |
| 1 P | 6 | 5702 **5011** | 6 | 5703 **5011** |
| 2 P | 3 | 5702 **5012** | 3 | 5703 **5012** |
| 3 P | 2 | 5702 **5013** | 2 | 5703 **5013** |
| 3 P + N | 1 | 5702 **5014** | 1 | 5703 **5014** |
| 4 P | 1 | 5702 **5016** | 1 | 5703 **5016** |

*(1) The signalling auxiliary contact provides the pre-break, the fuse presence and also blown fuse signal.*
*(2) Devices are cURus-certified.*

## Something to think about



10x38 RMs equipped with 0.5 A Midget fuses provide effective protection for voltage inputs and auxiliary power supplies for all our electronic devices
(DIRIS, DIRIS Digiware, DIRIS DigiBOX, etc.)

# Accessories (non UL certified)

## Connection accessories for RM 32 A 10 x 38

### Comb bridging connection(1)

| Designation | Cross-section (mm²) | Reference |
|---|---|---|
| Unipolar comb with 12 modules | 10 | 1749 **0001** |
| Unipolar comb with 13 modules | 10 | 1749 **0011** |
| Unipolar comb with 57 modules | 10 | 1749 **0021** |
| Unipolar comb with 12 modules | 16 | 1749 **0031** |
| Unipolar comb with 13 modules | 16 | 1749 **0041** |
| Unipolar comb with 57 modules | 16 | 1749 **0051** |
| Nozzle | | 1749 **8001** |

*(1) Not UL.*

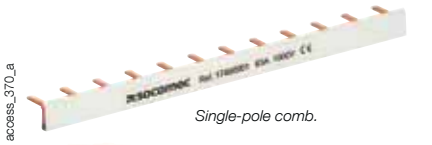

*Single-pole comb.*



*Insulated neutral terminal.*



*Nozzle.*

### Connection terminals

| Designation | Reference |
|---|---|
| Insulated neutral terminal for a 6 to 25-mm² cable, side input | 1749 **9001** |
| Insulated neutral terminal for a 6 to 50-mm² cable, side input | 1749 **9002** |
| Fully insulated power feed terminal for a 6 to 25-mm² cable, side input | 1749 **9003** |
| Right/left insulated terminal, 6 x 25 mm² | 1749 **9004** |

## Auxiliary contact

### Use

1 or 2 NO/NC auxiliary contacts:
- Pre-break, fuse presence and fuse blown signalling for RMS 50 and 100.
- Fuse blown signalling for RM 50 and 100.

### Connection

By 6.35 mm fast-on terminal.

| Characteristics<br>Rating (A) | Contact type | Operating current $I_e$ (A) 250 VAC AC-13 |
|---|---|---|
| 50 … 100 | NO/NC contact | 2.5 |
| 50 … 100 | Two-level NO/NC contact | 0.1 |

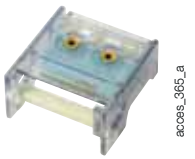





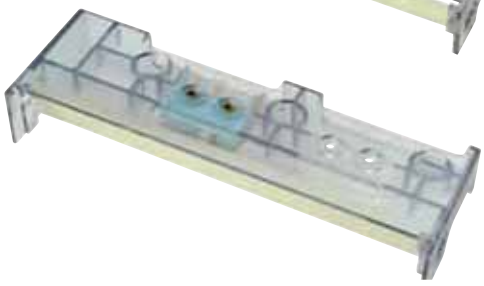


| References<br>NO/NC contact<br>Rating (A) | Contact | Reference(1) |
|---|---|---|
| 50 | 1 P with 1 AC | 5702 **9901** |
| 50 | 3 P with 1 AC | 5702 **9903** |
| 50 | 3 P with 2 AC | 5702 **9030** |
| 100 | 1 P with 1 AC | 5703 **9901** |
| 100 | 3 P with 1 AC | 5703 **9903** |
| 100 | 3 P with 2 AC | 5703 **9030** |

*(1) Not UL.*

| Low level NO/NC auxiliary contact<br>Rating (A) | Contact | Reference |
|---|---|---|
| 50 | 1 P with 1 AC | 5702 **9911** |
| 50 | 3 P with 1 AC | 5702 **9913** |
| 100 | 1 P with 1 AC | 5703 **9911** |
| 100 | 3 P with 1 AC | 5703 **9913** |

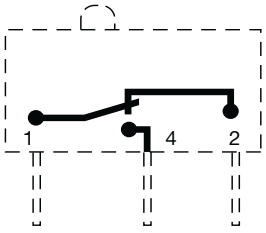

## Key handle interlocking system

**Use**

Padlocking of the handle (padlock not supplied).

| For RM and RMS | | |
|---|---|---|
| **Rating (A)** | **Quantity (units)** | **Reference(1)** |
| 32 | 5 | 5701 **9040** |
| 50 | 5 | 5702 **9040** |
| 100 | 5 | 5703 **9040** |

*(1) Not UL.*




## Coupling system for RM

| For RM and RMS | | |
|---|---|---|
| **Rating (A)** | **Quantity (units)** | **Reference(1)** |
| 32 | 12 | 5704 **0003**(2) |
| 50 … 100 | 12 | 5702 **9020**(2) |

*(1) Not UL.*
*(2) One coupling device allows to link two RM/RMS. Also sold in bags containing separate components (bags of 100 pieces) for assembling larger quantities. Contact us*



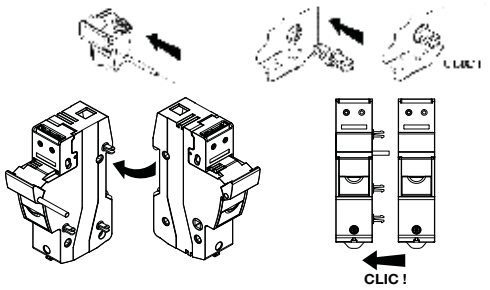


## Reinforced insulation kit

| Rating (A) | Reference(1) |
|---|---|
| 32 | 5701 **9010**(2) |

*(1) Not UL.*
*(12) 1 reference = 1 set of 10 couplings.*



## Characteristics according to UL 4248-1

### 30 to 100 A

| **Thermal operational current** | | **30 A** | **50 A** | **100 A** |
|---|---|---|---|---|
| Fuse size | | Midget / 10 x 38 | 14 x 51 | 22 x 58 |
| Rated operating voltage (V) | | 750 | 750 | 750 |
| Rated fuse dissipated power (W/P) | | 3 | 5 | 9.5 (max 12 W) |
| Protection degree | | IP20 | IP20 | IP20 |
| gG fuse protected short-circuit withstand | | | | |
| | **Rated volatge** | | | |
| Prospective short-circuit current (kA rms.)(1) | 690 VAC | 100 | 100 | 100 |
| Prospective short-circuit current (kA rms.)(1) | 400/500 VAC | 120 | 120 | 120 |
| Design current derating coefficient for N poles side by side | | | | |
| N = 1 … 3 | | 1 | 1 | 1 |
| N = 4 … 6 | | 0.8 | 0.8 | 0.8 |
| N = 7 … 9 | | 0.7 | 0.7 | 0.7 |
| N ≥ 10 | | 0.6 | 0.6 | 0.6 |
| Design current derating coefficient depending on the temperature | | | | |
| 20°C | | 1 | 1 | 1 |
| 30°C | | 0.95 | 0.95 | 0.95 |
| 40°C | | 0.90 | 0.90 | 0.90 |
| 50°C | | 0.80 | 0.80 | 0.80 |
| 60°C | | 0.70 | 0.70 | 0.70 |
| 70°C | | 0.60 | 0.60 | 0.60 |
| Connection | | | | |
| Minimum Cu cable cross-section SOLID / STRANDED | | 0.75 mm² / 18 AWG | 1.5 mm² / 16 AWG | 1.5 mm² / 16 AWG |
| Maximum Cu cable cross-section SOLID | | 16 mm² / 8 AWG | 35 mm² / 8 AWG | 50 mm² / 1 AWG |
| Maximum Cu cable cross-section STRANDED | | 16 mm² / 8 AWG | 25 mm² / 6 AWG | 35 mm² / 2 AWG |
| Tightening torque | | 2.5 Nm / 22 lb.in | 3 Nm / 26 lb.in | 4 Nm / 35 lb.in |
| Dimensional data | | | | |
| Weight of 1 P / N (kg) | | 0.057 / 0.06 | 0.1 | 0.155 |
| Weight of 1 P + N (kg) | | 0.117 | 0.215 | 0.327 |
| Weight of 3 P + N (kg) | | 0.229 | 0.415 | 0.632 |

*(1) Connection for RM32 1 P + N (1 module).*

## Characteristics according to IEC 60269-2

### 32 to 100 A

| **Thermal current $I_{th}$ (20°C)** | **32 A** | **50 A** | **100 A** |
|---|---|---|---|
| Fuse size | 10 x 38 | 14 x 51 | 22 x 58 |
| Rated insulation voltage $U_i$ (V) | 690 | 690 | 690 |
| Fuse rating (A) | | | |
| at 400 VAC | 32 | 50 | 125 |
| at 500 VAC | 32 | 50 | 125 |
| at 690 VAC | | 50 | 125 |

# Dimensions

## RM 32 A

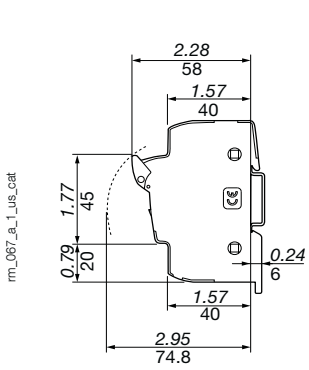


## RM / RMS 50 A unipolar and multipolar

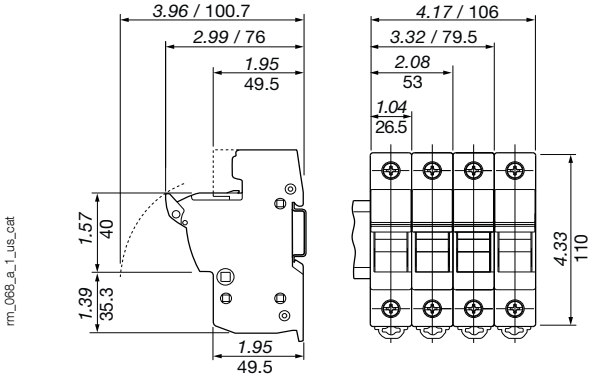


## RM / RMS 100 A unipolar and multipolar

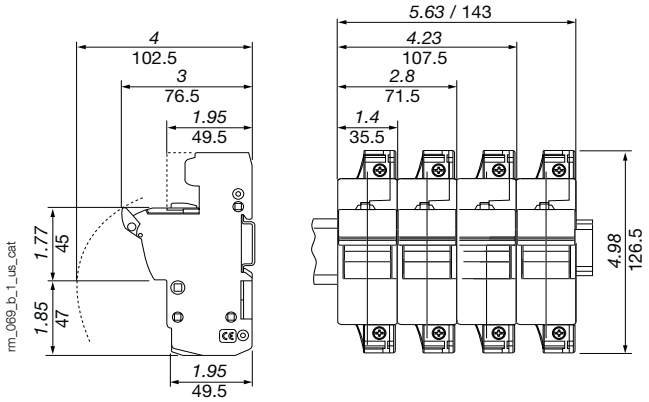


## RM 32 A Ref.: 5601 5005

