| DATA SHEET | 52104450 |
|---|---|
| **SKINDICHT® ME-M** | valid from : 15.1.2016 |

The SKINDICHT® ME-M enlargers enable the use of the cable glands with bigger outer thread than the already existing thread openings on machines, devices and housings.



**Technical features:**

| | |
|---|---|
| Material | Brass, nickel-plated |
| External tread | M12x1,5 up to M50x1,5 acc. to EN 60423 |
| Internal thread | M16x1,5 up to M63x1,5 acc. to EN 60423 |

**Norm references:**

RoHS CE

For more information please see our current catalogue.

**SKINDICHT® ME-M**

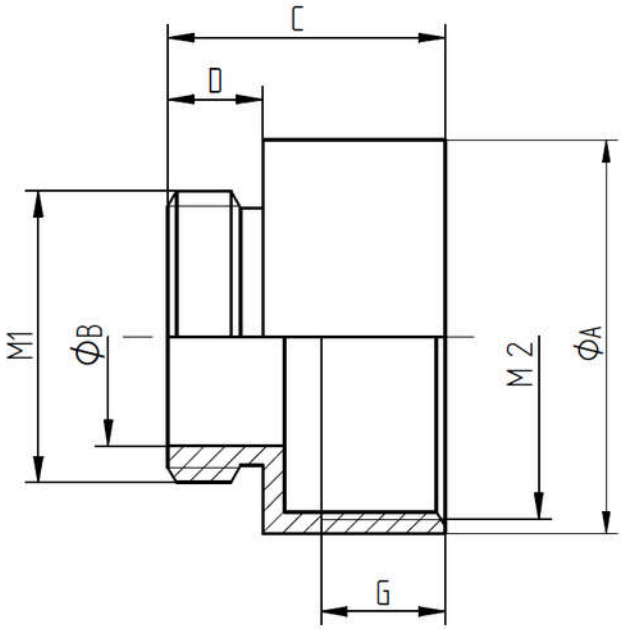


| External tread M1 | Internal thread M2 | Ø A [mm] | Ø B [mm] | C [mm] | D [mm] | G [mm] | Article No. |
|---|---|---|---|---|---|---|---|
| M12x1,5 | M16x1,5 | 18 | 8 | 15 | 5 | 7,5 | 52104450 |
| M16x1,5 | M20x1,5 | 22 | 12 | 17,5 | 6 | 8,5 | 52104452 |
| M20x1,5 | M25x1,5 | 27 | 15 | 19 | 6,5 | 8,5 | 52104454 |
| M25x1,5 | M32x1,5 | 34 | 20 | 21 | 6,5 | 9,5 | 52104456 |
| M32x1,5 | M40x1,5 | 42 | 26 | 23 | 7 | 9,5 | 52104458 |
| M40x1,5 | M50x1,5 | 53 | 33 | 31 | 9 | 11 | 52104460 |
| M50x1,5 | M63x1,5 | 67 | 43 | 33 | 10 | 16 | 52104462 |

**SKINDICHT® ME-M 6 Kt.**

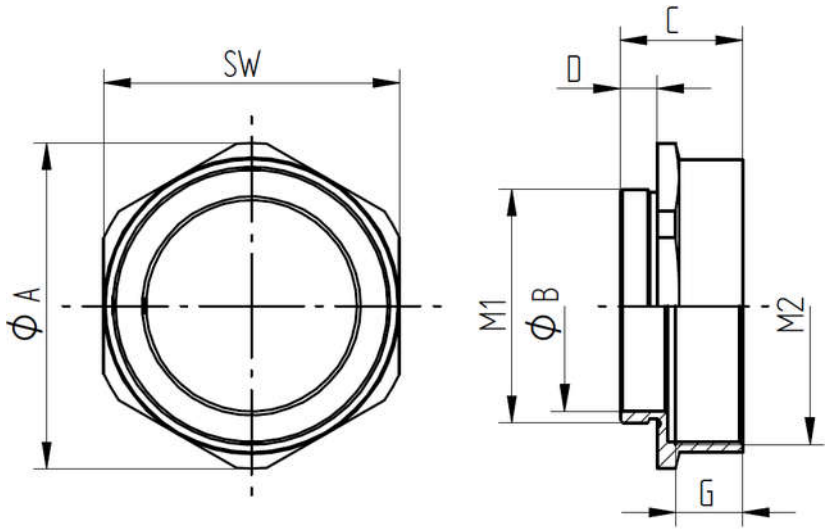


| External tread M1 | Internal thread M2 | SW [mm] | Ø A [mm] | Ø B [mm] | C [mm] | D [mm] | G [mm] | Article No. |
|---|---|---|---|---|---|---|---|---|
| M63x1,5 | M75x1,5 | 80 | 88 | 57 | 33 | 10 | 18 | 52104463 |



MAST1 / 28.01.2016 / freigegeben