brainboxes
www.brainboxes.com
UK +44 (0)151 220 2500 // USA +1 855 958 2502 // JAPAN +81-3-3683-0509
www.brainboxes.com // sales@brainboxes.com

CB-534 Industrial Isolated RS232 Booster

RS232 Booster



- Boosts and isolates RS232 signals
- Max baud rate 120,000
- Works at all data word lengths, parity options and stop bit combinations
- -30˚C to +80˚C/-22ºF to +176ºF Temperature range

	ISOLATION	OUTPUT SWING -11V to +11V	RS232	RS422/485	PROTOCOL CONVERSION	MAX BAUD
CB-512	✓	✗	✓	✓	✓	1 Mb
CB-523	✗	✗	✓	✓	✓	1Mb
CB-534	✓	✓	✓	✗	✗	120 kb

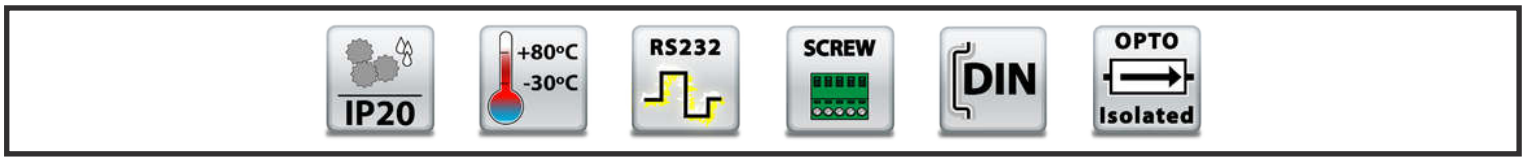

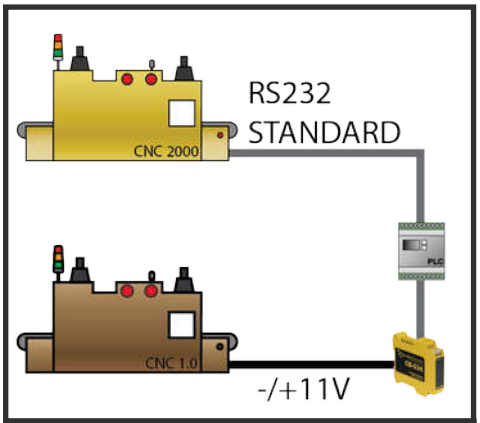

Connect to legacy equipment

Some machines require a larger voltage input than the RS232 standard. The CB-534 conditions the signal to make it suitable for legacy equipment.

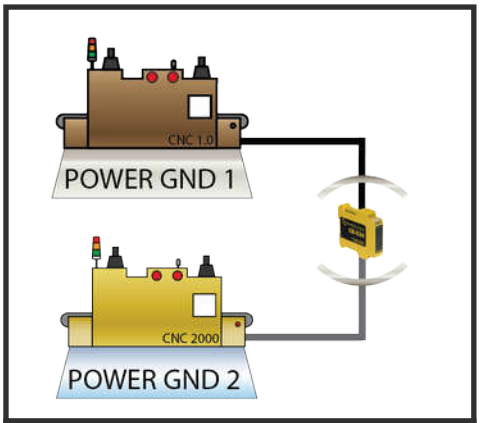

Protect with Isolation

CB-534 isolates the connected devices from each other. This protects against relative differences in ground voltages.

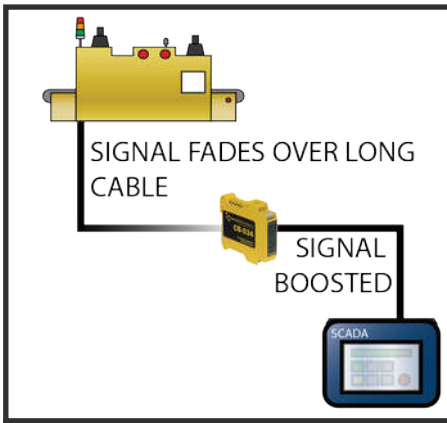

Boost RS232 signal

RS232 signal can degrade over long cable runs. The CB-534 boosts the RS232 signal enabling additional distance between connections.



brainboxes
www.brainboxes.com
UK +44 (0)151 220 2500 // USA +1 855 958 2502 // JAPAN +81-3-3683-0509
www.brainboxes.com // sales@brainboxes.com

CB-534

Industrial Isolated RS232 Booster



Booster for RS232 signal can extend cable length. Works with a wide voltage swing and outputs -11V to +11V signal making it suitable for legacy and non-conforming RS232 equipment. Provides isolation between two RS232 devices. This product doesn't require any software, simply connect using the easy-wire numbered terminal blocks.

Connectors	
Screw Terminals	3.5mm pitch, #22 - #14, 0.5mm^2-2.5mm^2 pin
Conductor Wire	28 to 16 AWG, 0.14mm to 1.5mm Max
Environmental	
Operating Temperature	-30°C to +80°C / -22ºF to +176ºF
Storage Temperature	-40°C to +85°C / -40ºF to +185ºF
Ambient Relative Humidity	5 to 95% (non-condensing)
Serial Port	
Ports	2 RS232
Port Settings	
Baud Rate	120,000 max
Output signal swing	Typ. +/- 11V into RS-232 compliant load
Signals supported	TXD, RXD, RTS, CTS
Power Supply	
Power Supply input	Redundant DC Dual Power Inputs, reverse polarity protected +5 VDC to +30VDC
Power Consumption	2.5 Watt typical 110mA@24V

brainboxes
www.brainboxes.com
UK +44 (0)151 220 2500 // USA +1 855 958 2502 // JAPAN +81-3-3683-0509
www.brainboxes.com // sales@brainboxes.com

CB-534 Industrial Isolated RS232 Booster

Housing IP-20 rated non-conducting polyamide case

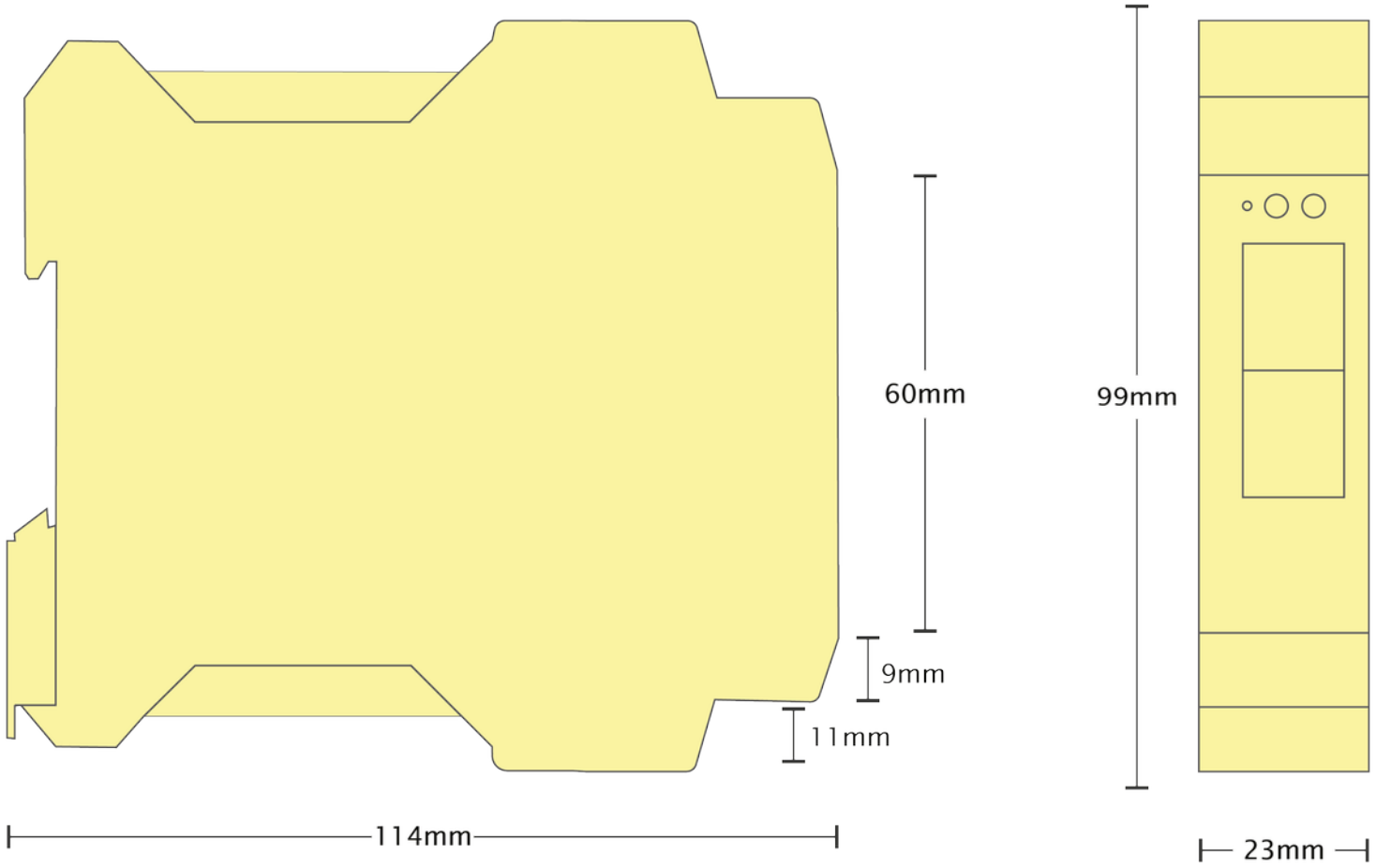

Terminal Block Pin Outs: Yellow: Port 1 / Grey: Port 2

	Pin 1	Pin 2	Pin 3	Pin 4	Pin 5
RS232	SIG GND	CTS	RxD	RTS	TxD
Black: +5V to +30V DC Power Input					
Power	-V	+VA	+VB	-V	Func GND

Lifetime Warranty and Support:
We can help with every aspect of your project, from getting you up and running to custom application.

brainboxes
www.brainboxes.com
UK +44 (0)151 220 2500 // USA +1 855 958 2502 // JAPAN +81-3-3683-0509
www.brainboxes.com // sales@brainboxes.com

CB-534

Industrial Isolated RS232 Booster

Packaging Information	
Packaging	Installation CD including manual, Quick Start Guide, Device
Packaged Weight	0.206 kg, 7.27 ounces
Packaged Dims	160x135x49 mm, 6.3x5.3x1.9 inches
GTIN Universal Code	837324004045
Approvals	
Industry Approvals	Microsoft Certified Gold Partner, WEEE, RoHS, AEO (C-TPAT), CE
Product Support	
Warranty	Lifetime - online registration required
Support	Lifetime Web, Email and Phone Support from fully qualified, friendly staff who work in and alongside the Product Development Team
Additional Information	
OEM option	Available for bulk buy OEM
Made In	Manufactured in the UK by Brainboxes Winner 2005 European Electronics Industry Awards 'Manufacturer of the Year'
Customisable	Brainboxes operate a 'Perfect Fit Custom Design' policy for volume users. More info:sales@brainboxes.com



PW-600

Power supply with connectors for UK, USA, EU and AUS mains socket. 'Tails' are suitable for connecting to screw terminal blocks.



PW-650

Power supply with USB connector and prewired screw terminal block. Suitable for use with 5V USB ports.



ES Range

Ethernet to Serial products are available in a range of formats and specifications.

www.brainboxes.com

© Brainboxes 2017