GEFRAN

SMART HART IMPACT MELT PRESSURE TRANSMITTERS "HIE" SERIES, CURRENTE OUTPUT, PL d & SIL2 VERSION

Output 4...20mA



The HIE series of Gefran are pressure transmitters with HART communication protocol for using in high temperature environment.
The main characteristic of this series is the capability to read temperature of the media up to 350°C with a fluid-free technology.
The pressure is transferred, through a high thickness membrane, directly to the silicon sensing element. The transduction of the stress is carried out by a special silicon micro-machined structure (MEMS).
The operating principle is piezoresistive.
The **SIL2** and **PL d** approvals make the product suitable for use in the **Functional Safety** applications, particularly in the process plants for the production of polymers, where it is an essential requirement.

The main characteristic of the "IMPACT" sensors is that they do not contain any transmission fluid.
The sensing element, directly positioned behind the contact membrane, is made in silicon through micromachining techniques.
The micro structure includes the measurement membrane and the piezoresistors.
The minimum deflection required by the sensing element makes it possible to use very robust mechanics.
The process contact membrane can be up to 15 times thicker than the membrane used in traditional Melt sensors.

ADVANTAGES

- Total compatibility with the European RoHS Directive
- High strength
- Long life
- High thickness contact diaphragm
- Fluid-free technology
- SIL2 and PLd approvals
- Fast response time
- Analogue and digital output (Smart/Hart)

MAIN FEATURES

- Pressure ranges:
  0-10 to 0-1000 bar / 0-150 to 0-15000 psi
- Accuracy: < ±0.25% FS (H); < ±0.5% FS (M)
- Standard threading 1/2-20UNF, M18x1.5;
- Autozero function on board / external option
- 15-5 PH stainless steel diaphragm GTP+ coated
- SIL2 and PL d approvals for Functional Safety
- 4-20 mA analogue output and digital with HART protocol

AUTOZERO FUNCTION

All signal variations in the absence of pressure can be eliminated by using the Autozero function.
This function is activated by closing a magnetic contact located in the electronic transmitter or by an external contact.
The procedure is allowed only at zero" pressure.
The Autozero function should be activated ONLY when the sensor is completely installed on the system.

TECHNICAL SPECIFICATIONS

Accuracy (1)	**H** <±0.25%FS **M** <±0.5%FS
Resolution	16 Bit
Measurement range	0..10 to 0..1000bar 0..150 to 0..15000psi
Rangeability	3:1
Maximum overpressure (without degrading performances)	1.5 x FS (up to 1200 bar/ 17400 psi max)
Measurement principle	Piezoresistive
Power supply	13...30Vdc
Maximum current absorption	23mA
Output signal Full Scale FS	20mA
Output signal at Zero (tolerance ± 0.25% FS)	4mA
Calibration signal	80% FS
Output short circuit ingress and reverse polarity protection	YES
Compensed temperature range housing	0...+85°C
Operating temperature range housing	-30...+85°C
Storage temperature range housin	-40...+125°C
Maximum diaphragm temperature	350°C / 660°F
Thermal drift in compensated range: Zero / Calibration / Sensibility	< 0.02% FS/°C
Zero signal variation due to process temperature variation in range (20-350°C)	< ± 1.2%FS
Span signal variation due to process temperature variation in range (20-350°C)	< ± 1%FS
Contact diaphragm material	15-5 PH with GTP+ coating
Thermocouple (model HIE2)	STD: type "J" (isolated junction)
Protection degree (with 6-pole female connector CON300)	IP66
SIL2 certification	IEC/EN 62061 - IEC 61508
PL d certification	EN ISO 13849

FS = Full scale output (1) BFSL method (Best Fit Straight Line): includes combined effects of Non-Linearity, Hysteresis and Repeatability (according to IEC 62828-2).

MECHANICAL DIMENSIONS

HIE0

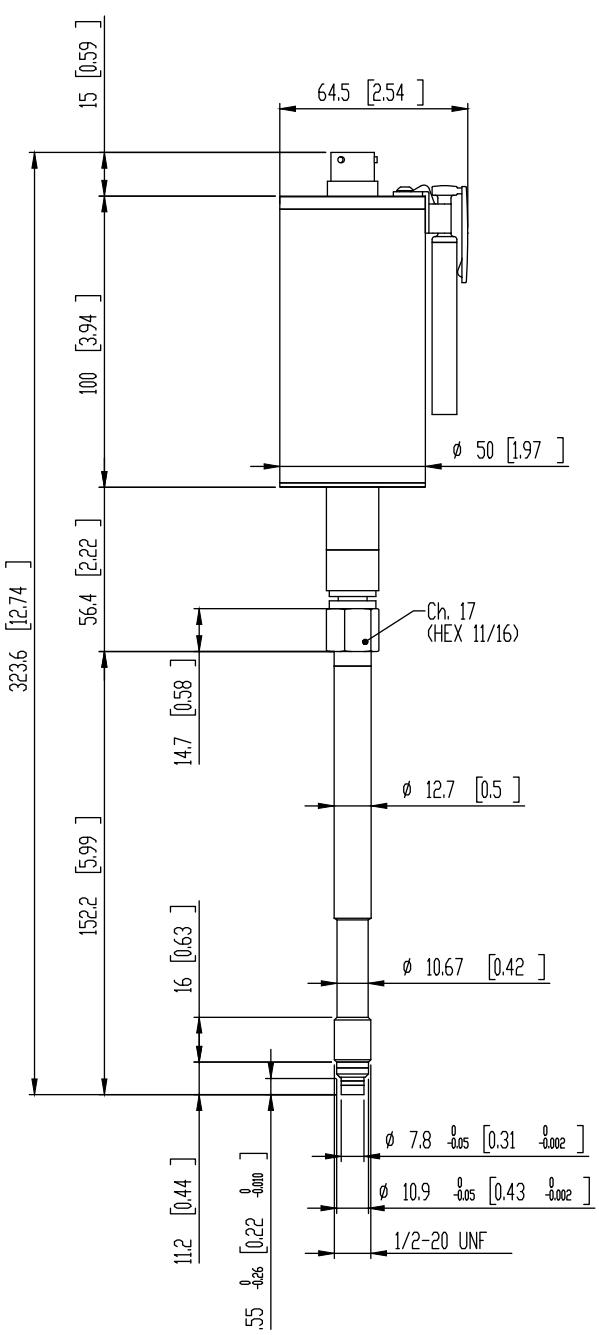

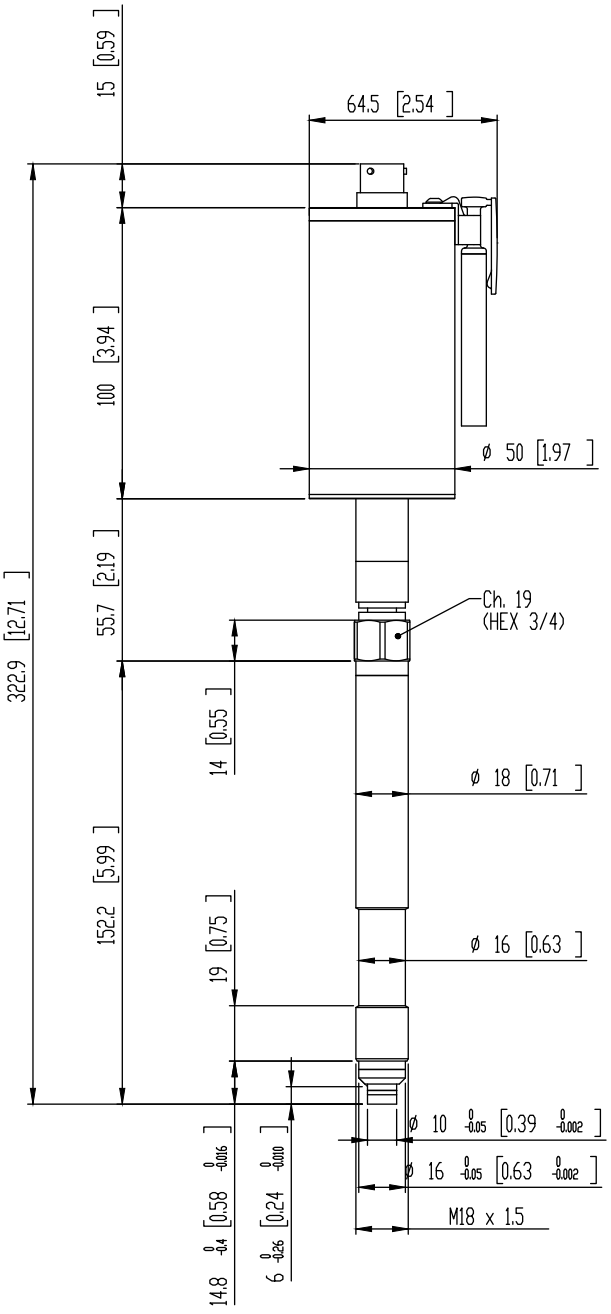

NOTE : dimensions refer to rigid stem length option “4” (153 mm – 6”)

WARNING : For installation use a maximum tightening torque of 40 Nm (355 in-lb)

MECHANICAL DIMENSIONS

HIE1-M

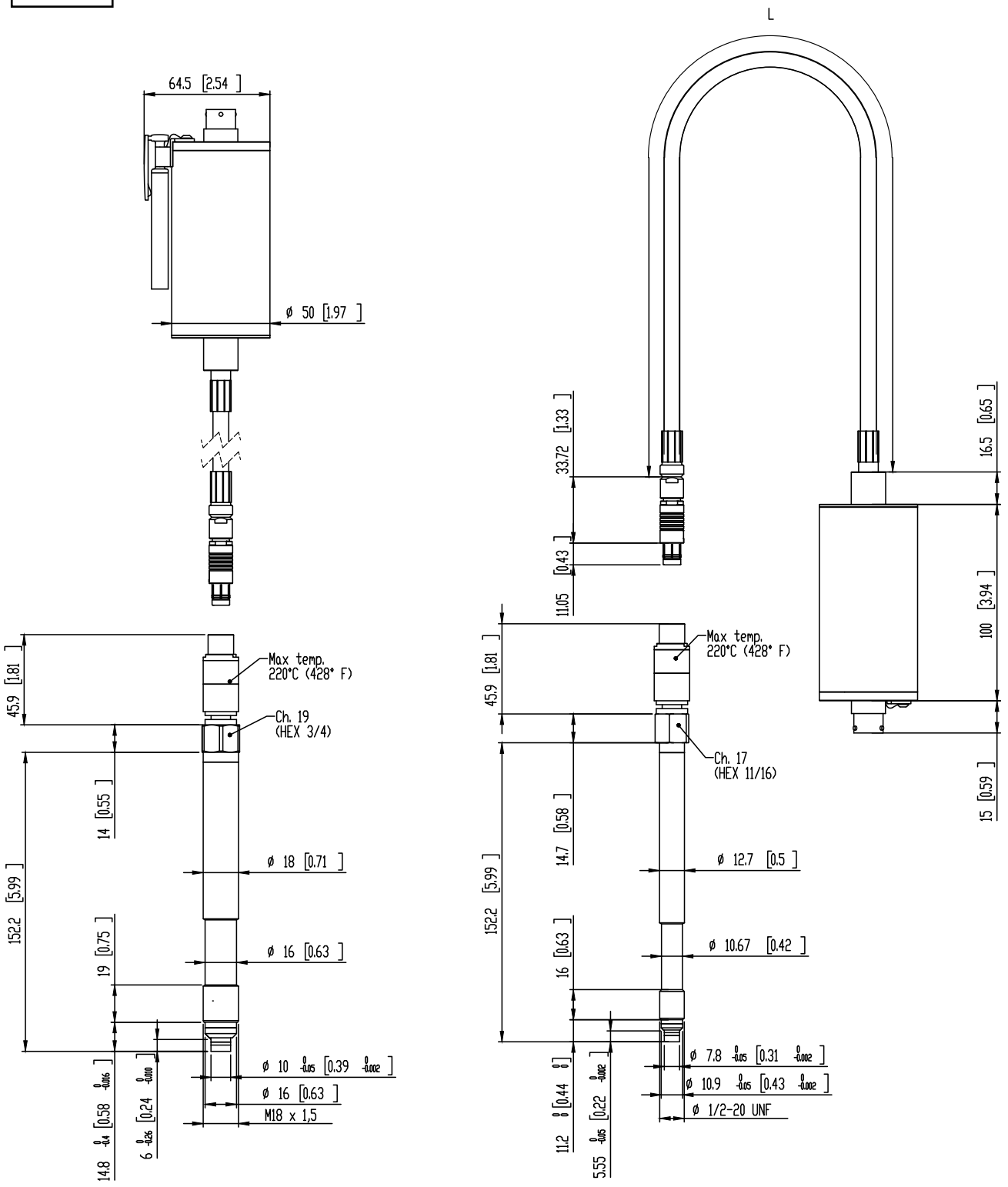

NOTE : dimensions refer to rigid stem length option “4” (153 mm – 6”)

WARNING : For installation use a maximum tightening torque of 40 Nm (355 in-lb)

MECHANICAL DIMENSIONS

HIE1-S

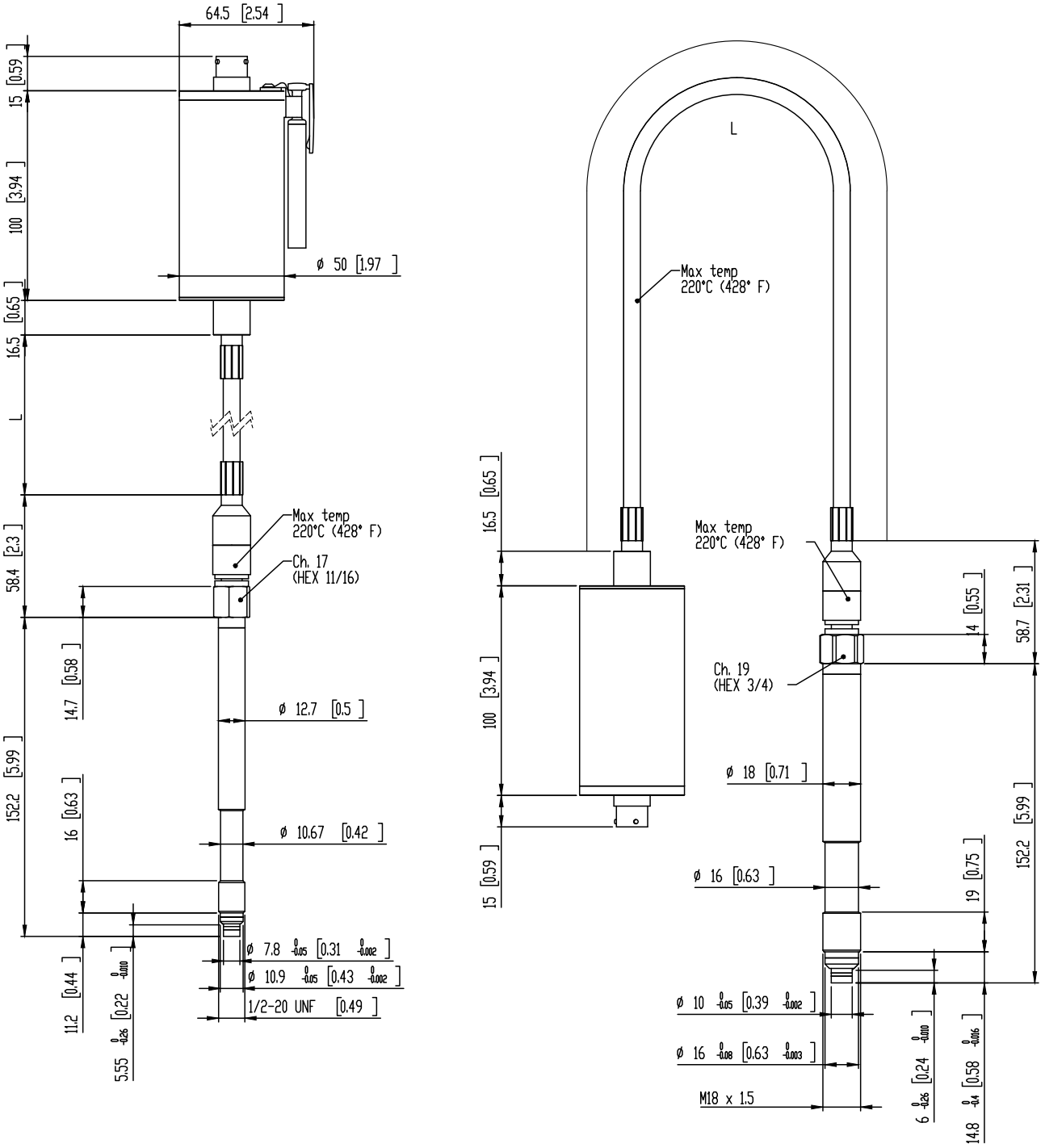

NOTE : dimensions refer to rigid stem length option “4” (153 mm – 6”)

WARNING : For installation use a maximum tightening torque of 40 Nm (355 in-lb)

MECHANICAL DIMENSIONS

HIE2

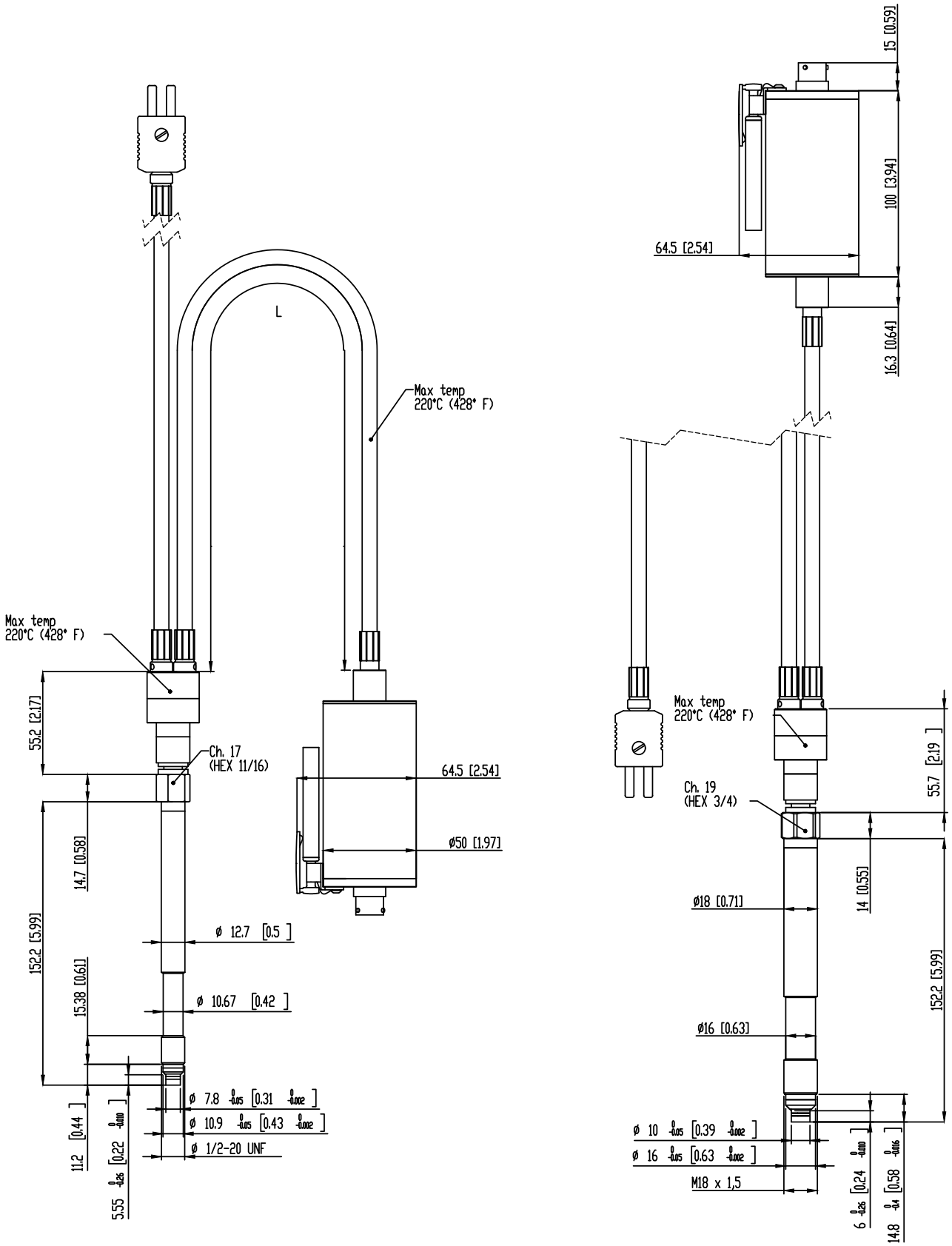

NOTE : dimensions refer to rigid stem length option “4” (153 mm – 6”)

WARNING : For installation use a maximum tightening torque of 40 Nm (355 in-lb)

SELF DIAGNOSTICS (ONLY FOR SIL2 / PL d VERSIONS)

Below the conditions detected by the sensor self-diagnostics:
· Cut cable / device non connected / broken power supply, output ≤ 3.6mA
· Pin detachment output ≤ 3.6mA
· Broken primary element ≥21mA
· Pressure above 200% of the span, output ≥21mA
· Voltage monitor in case of overvoltage/undervoltage/voltage variation in the electronics, output ≤ 3.6mA (*)
· Program sequence error, output ≤ 3.6mA (*)
· Overtemperature on the electronics, output ≤ 3.6mA (*)
· Error on the primary element output or on the first amplification stage, output ≥ 21mA

(*) *In such conditions the Alarm Type can be programmed via HART at ≥ 21 mA.*

OPTIONAL RELAY OUTPUT FOR EXCESS PRESSURE PROTECTION

Safety relay characteristics:

- Activation threshold to be defined in the order code
· Rated carry current: 1A
· Rated voltage: 24Vdc ± 20%
· Switch accuracy: 2 x sensor accuracy
· Hysteresis: 2% FS

SUPPLY	OUTPUT	RELAY STATUS
OFF	-	OPEN
ON	< X%FS	CLOSED
ON	> X%FS	OPEN
ON	Output ≤ 3.6mA	OPEN
ON	Output ≥ 21mA	OPEN

NAMUR COMPLIANCE (ONLY FOR SIL2 / PL d VERSIONS)

The sensors are tested according to Namur NE21 recommendations. The same compatibility is valid for the NE43 Namur recommendation with the following sensor behaviour in case of breakdown:
· Cut cable: breakdown information as the signal is ≤ 3.6mA
· Device not connected: breakdown information as the signal is ≤ 3.6mA
· Broken power-supply: breakdown information as the signal is ≤ 3.6mA or in case of performance problems:
· Broken primary element ≥ 21mA
· Pressure above 200% of the span, output ≥21 mA
· Others ≤ 3.6mA(*)

(*) *In such a condition the Alarm Type can be programmed via HART at ≥ 21 mA.*

Note: in all the remaining situations, the output signal is always included between 3.8 and 20.5mA.

Recommendation: the error level set by the customer (e.g. maximum pressure value) has to be inside the nominal range.

LOAD DIAGRAM

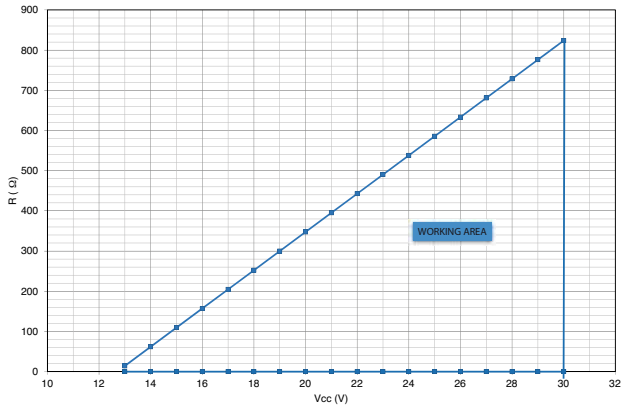

The diagram shows the optimum ratio between load and power supply for transmitters with 4…20mA output.
For correct function, use a combination of load resistance and voltage that falls within the two lines in the graph above.

AUTOZERO FUNCTION

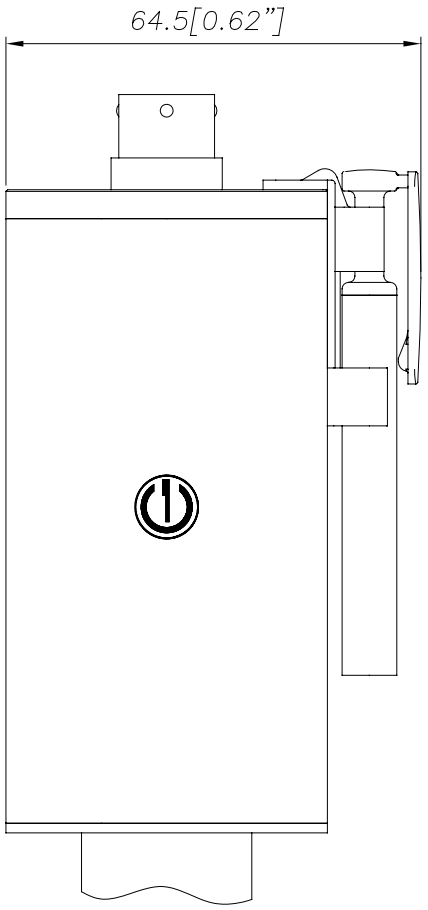

The Autozero function is activated through a magnetic contact (external magnet supplied with the sensor).
The Autozero function can be activated through HART command as well.
See the manual for a complete Autozero function explanation.

ELECTRICAL CONNECTIONS

CURRENT OUTPUT

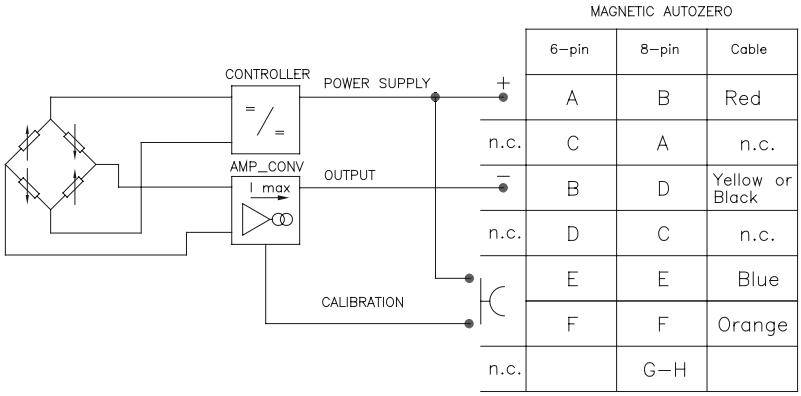

MAGNETIC AUTOZERO

	6–pin	8–pin	Cable
+	A	B	Red
n.c.	C	A	n.c.
−	B	D	Yellow or Black
n.c.	D	C	n.c.
	E	E	Blue
	F	F	Orange
n.c.		G–H	

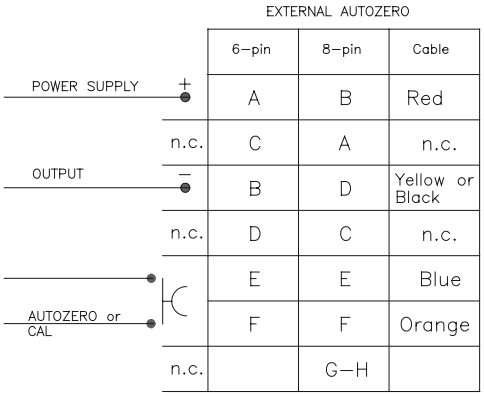

EXTERNAL AUTOZERO

	6–pin	8–pin	Cable
+	A	B	Red
n.c.	C	A	n.c.
−	B	D	Yellow or Black
n.c.	D	C	n.c.
	E	E	Blue
	F	F	Orange
n.c.		G–H	

The cable shield is tied to both sides, i.e. to the sensor connector and to the controller

RELAY OUTPUT

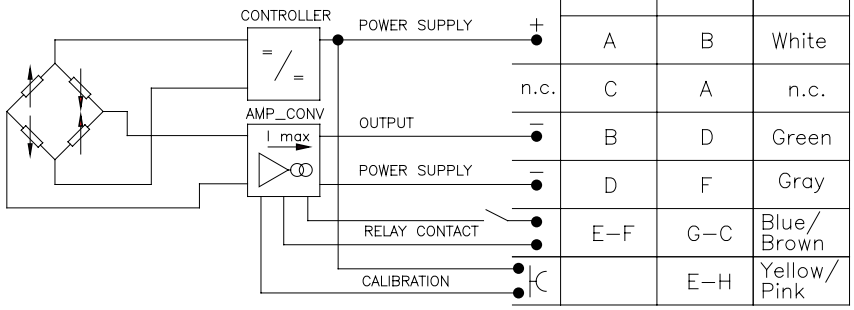

MAGNETIC AUTOZERO

	6–pin	8–pin	Cable
+	A	B	White
n.c.	C	A	n.c.
−	B	D	Green
−	D	F	Gray
	E–F	G–C	Blue/ Brown
		E–H	Yellow/ Pink

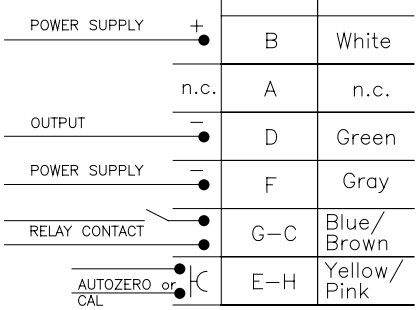

EXTERNAL AUTOZERO

	8–pin	Cable
+	B	White
n.c.	A	n.c.
−	D	Green
−	F	Gray
	G–C	Blue/ Brown
	E–H	Yellow/ Pink

The cable shield is tied to both sides, i.e. to the sensor connector and to the controller

6 pin Connector VPT07RA10-6PT2 (PT02A-10-6P)

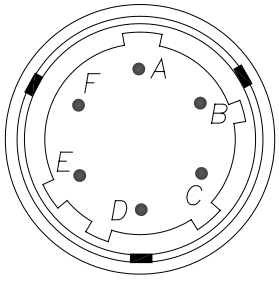

8 pin Connector (PC02E-12-8P) Bendix

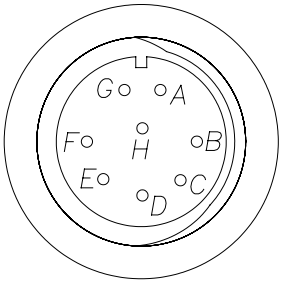

CABLE OUTPUT (1/2 14-NPT) L = 1 m

Current output

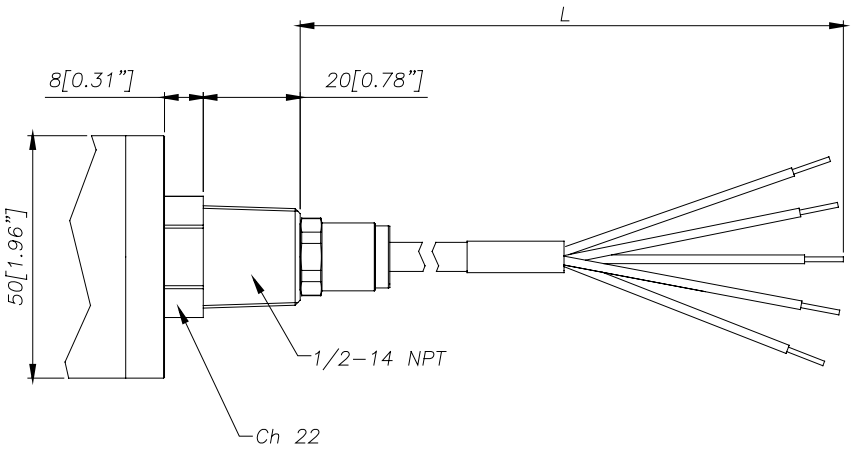

Red	V+
Black	V- (output)
Blue	Cal+ / Autozero
Orange	Cal- / Autozero
Green	GND

Relay output
Magnetic Autozero/External Autozero

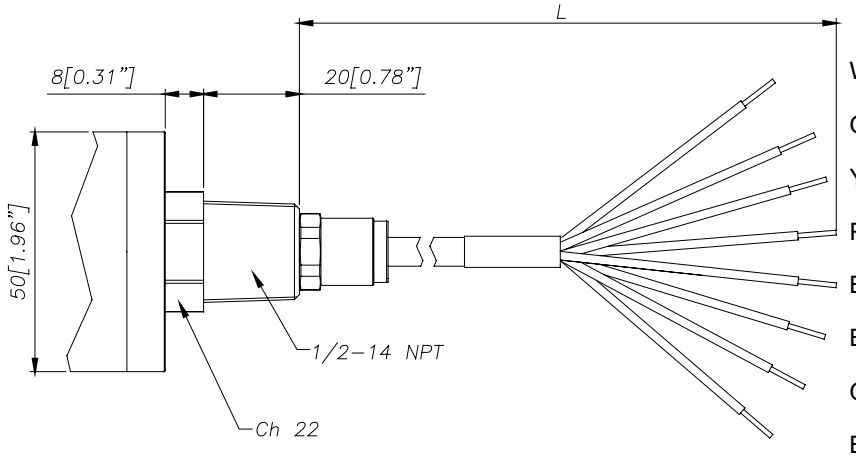

White	V+
Green	V- (output)
Yellow	Cal+ / Autozero
Pink	Cal- / Autozero
Blue	Relay+
Brown	Relay-
Gray	Supply- (Relay)
Black	GND

ACCESSORIES

Connectors	
6-pin female connector (IP66 protection degree)	**CON300**
8-pin female connector	**CON307**
Extension cables	
6-pin connector with 8m (25ft) cable	**C08WLS**
6-pin connector with 15m (50ft) cable	**C15WLS**
6-pin connector with 25m (75ft) cable	**C25WLS**
6-pin connector with 30m (100ft) cable	**C30WLS**
Accessories	
Mounting bracket	**SF18**
Dummy plug for 1/2-20 UNF	**SC12**
Dummy plug for M18x1.5	**SC18**
Drill kit for 1/2 -20 UNF	**KF12**
Drill kit for M18 x 1.5	**KF18**
Cleaning kit for 1/2-20 UNF	**CT12**
Cleaning kit for M18x1.5	**CT18**
Fixing pen clip	**PKIT 1032**
Autozero pen	**PKIT 378**
Thermocouple for HIE2 model Type "J" (153mm - 6" rigid rod)	**TTER 601**

Cable color code	
Conn.	**Wire**
A-2	Red
B-4	Black
C-1	White
D-6	Green
E-7	Blue
F-3	Orange
5	Grey
8	Pink

PROCESS FLANGE ADAPTER

The process flange adapter is a sensor accessory that allows for the installation of 1/2-20 UNF or M18x1.5 melt pressure sensor in a button seal style process mounting port. The adapter is made with an adapter body with different snout lengths plus an adpter flange available in different sizes (see tables and drawing below). Each combination of snout and flange is available according to the ordering information with a specific ordering code.

SPECIFICATIONS

- Pressure range: according to the selected sensor (up to 1000 bar/15000 psi max)
- Temperature range: according to the selected sensor
- Material of construction: 17-4PH Stainless steel

ADAPTER BODY

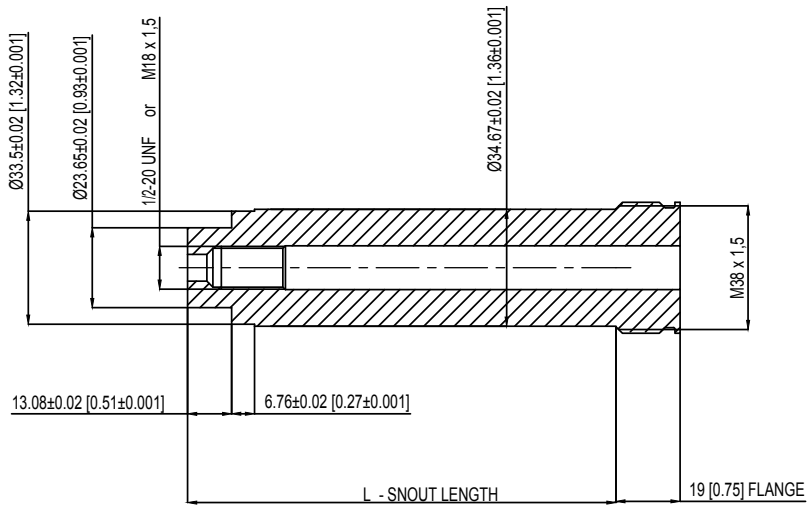

1/2-20 UNF	L -SNOUT LENGTH
STE1020	127 [5]
STE1021	51.6 [2.031]

M18 X 1,5	L - SNOUT LENGTH
STE1022	127 [5]
STE1023	51.6 [2.031]

ADAPTER FLANGE

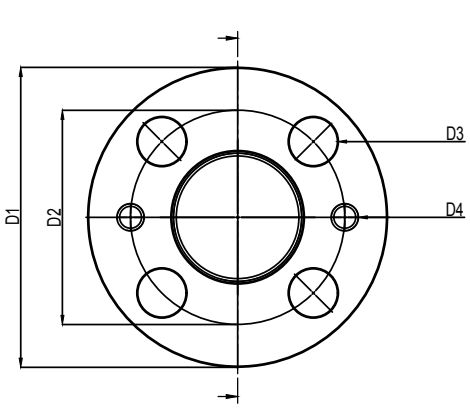

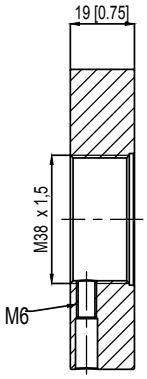

	FLA960	FLA961
D1	82.6 [3.25]	88.9 [3.50]
D2	54 [2.14]	63.5 [2.50]
D3	13.2 [0.52]	14.3 [0.56]
D4	5/16-18 UNC	5/16-18 UNC

ORDER CODE

KIT - 5 - 0 - 1

Snout length	
5 inch [127 mm]	**5**
2.031 inch [51.6 mm]	**2**

Flange type (see technical drawing)	
FLA960	**0**
FLA961	**1**

Thread dimensions	
1/2-20 UNF	**1**
M18 x 1.5	**4**

ADAPTER GASKESTS			
Material	**Dimensions**	**Max Pressure**	**Ord. Code**
Aluminium	30.2 mm [1.19”] OD 24.1 mm [.950”] ID	200 bar/3000 psi	RON360
AISI 303 SS	30.2 mm [1.19”] OD 24.1 mm [.950”] ID	700 bar/10000 psi	RON361

Example:

KIT501

Process adapter with 5” snout length, 82.6 mm size flange, suitable for 1/2-20 UNF melt sensor

ORDER CODE

HI - □ - □ - □ - □ - □ - □□□ - □ - □ - □ - □ - □ — 0000 | X | 000 | X | 0

OUTPUT SIGNAL	
4...20mA / Hart	**E**

VERSION	
Rigid rod	**0**
Rigid + flexible rod	**1**
With thermocouple	**2**

MECHANICS	
Single fixed	**A**
Modular fixed	**B***
Single floating	**S**
Modular floating	**M***

* not available for HIE0 and HIE2 version

CONNECTOR	
6 pin	**6**
8 pin	**8**
NPT Cable	**N**

ACCURACY CLASS	
0.25% FS	**H**
0.5% FS	**M**

MEASUREMENT RANGE			
bar		**psi**	
10*	**B01D**	150*	**P15D**
20	**B02D**	300	**P03C**
35	**B35U**	500	**P05C**
50	**B05D**	750	**P75D**
70	**B07D**	1000	**P01M**
100	**B01C**	1500	**P15C**
200	**B02C**	3000	**P03M**
350	**B35D**	5000	**P05M**
500	**B05C**	7500	**P75C**
700	**B07C**	10000	**P10M**
1000	**B01M**	15000	**P15M**

* 10 bar (B01D) or 150psi (P15D) for version M18x1,5

THREADS	
1/2 - 20 UNF	**1**
M18 x 1.5	**4**

Output relay version (activation threshold):
X = no relay B = 80% FS
A = 70% FS C = 90% FS

000= Special executions

E	External Autozero (*)
0	Magnetic Autozero

(*) as an alternative to the CAL function

P	Performance Level="d"
S	SIL2
0	Standard 4...20mA

FLEXIBLE ROD LENGTH (mm/inches)		
Standard (HIE0)		
0	**none**	
Standard (HIE1, HIE2)		
D	457mm	18"
E	610mm	24"
F	760mm	30"
L	711mm	28"
A	76mm	3"
B	152mm	6"
C	300mm	12"
G	914mm	36"
H	1067mm	42"
I	1220mm	48"
J	1372mm	54"
K	1520mm	60"

RIGID ROD LENGTH (mm/inches)		
Standard (HIE0, HIE1, HIE2)		
4	153mm	6"
5	318mm	12.5"
1	38mm	1,5"
2	50mm	2"
3	76mm	3"
6	350mm	14"
7	400mm	16"
8	456mm	18"

Example
HIE1-M-6-M-B07C-1-4-D-P-0-4-2130B000X00
Fluid-free Melt pressure transmitter, 4...20mA output with HART protocol,
connector 6 pin, 1/2-20 UNF thread, 700 bar pressure range, 0.5% accuracy class,
Modular floating mechanics, 153 mm (6") rigid rod, 457 mm (18") flexible rod
PL d approval, magnetic autozero, relay output with 80%FS activation threshold.

Sensors are manufactured in compliance with:
- EMC compatibility directive: 2014/30/EU
- MACHINERY directive: 2006/42/EC
- RoHS directive: 2011/65/EU

GEFRAN spa reserves the right to make any kind of design or functional modification at any moment without prior notice.

GEFRAN spa
via Sebina, 74
25050 PROVAGLIO D'ISEO (BS) - ITALIA
tel. 0309888.1 - fax. 0309839063
Internet: http://www.gefran.com