GEFRAN

GFXTERMO4

4-ZONE MODULAR CONTROLLER



Main applications

- *Injection presses*
- *Thermoforming machines*
- *Extrusion*
- *Packaging machines*
- *Textile machines*
- *Hot runners*

Main characteristics

Multi-loop units for independent control of four control loops

- *4 universal process inputs*
- *4 independent hot/cold PIDs*
- *4 main outputs*
- *4 auxiliary analog inputs*
- *4 configurable outputs: relay / logic / TRIAC / continuous*
- *2 configurable relay*
- *2 digital inputs*
- *Standard communication port: Modbus RTU*
- *Optional port for Fieldbus: Profibus DP, CANopen, DeviceNet, Modbus RTU, Ethernet Modbus TCP, Ethernet IP, EtherCAT, ProfiNET*
- *Installs on DIN rod and panel*

PROFILE

GFXTERMO4 is a multi-loop control system that controls four process loops in a completely independent manner. Configuration of I/O resources is very rapid and flexible thanks to a programming tool that guides the user in the selection of parameters.

Each control loop has:

- *Process input*
- *Input for external CTs or CT / linear input*
- *Control output*
- *Cooling output*

Other auxiliary I/Os:

- *Two digital inputs*
- *Two relay outputs*

The use of two independent serial ports provides efficient communication ability.

The two serials are defined as follows:

- *"local bus" to create a GFXTERMO4 network and connect it to an operator panel or industrial PC.*

Uses Modbus RTU protocol and reaches a speed of 57,6 Kbps.

- *"field bus" to integrate with architectures that already use industrial field buses such as: Profibus DP, CANopen, DeviceNet, Modbus RTU, Ethernet Modbus TCP, Ethernet IP, EtherCAT, ProfiNET.*

The presence of "intelligence" directly on the board lets the user create fully independent and reliable controls.

The device installs on the DIN rod or with two M4 screws.

MODELS

GFXTERMO4

A single model is available for the control of four control loops.

INPUTS

Analog process inputs

The four process inputs are universal and can connect various signal types:

- thermocouples,
- resistance thermometers,
- linear in voltage and current.

The inputs are configurable via software. Not external adapter shunts are required.

Digital inputs

There are two digital inputs.

These inputs can be used to select one of the two presettable setpoints, or to select Manual-Automatic operation, or to reset the alarms latch. The operation of both inputs is configurable.

External/ auxiliary analog CTs (option)

An additional four inputs to read external CTs for simultaneous check of currents delivered to each zone, with consequent control of alarms (HB...). As an alternative, you can order the inputs to read four temperatures (CT) or linear inputs.

OUTPUTS

The functions are configurable via software.

Heating control

Each zone has a digital output configured for heating for direct control of solid state power units (SSR).

Cooling control (option)

Each zone has a digital output configured for cooling. Four output types are available: relay, logic, triac, continuous.

Alarm

Each unit has two relay outputs configured as minimum and maximum alarm.

SIGNAL LEDs

Eight signal LEDs provide immediate diagnostics of operating state.

RN RUN state of CPU
ER error
DI1 state of digital input DI1
DI2 state of digital input DI2
O1 state of output 1
O2 state of output 2
O3 state of output 3
O4 state of output 4
A meaning other than default can be assigned.

CONFIGURATION

The unit is configured by setting simple parameters.
No knowledge of programming language is needed.
The following can be used for configuration:
• GFX-OP accessory
• Winstrum software tool
• Operator terminal, industrial PC or PLC.

FUNCTIONS

Control
Advanced control algorithms provide excellent control of process variables.
Several types of control are available: ON/OFF, P, PI, PID (heat or cool alone as well as double-action heat+cool).
Cooling can be set by specifying the cooling fluid used: air, oil, water.
Calculation of the best process parameters is extremely quick and effective thanks to the use of sophisticated automatic tuning.
The use of advanced tuning lets the user check the most correct PID parameters under all conditions.

Alarms
8 alarm limits are available, freely assignable to each channel or to all channels (in AND / OR logic) and configurable as absolute, deviation, direct, reverse, window, latching or not, disabled at power-up.

Diagnostics
In addition to generic alarms, efficient diagnosis of the control loop lets the user prevent breakdowns and take timely action, for example in case of broken probe or load.
The LBA alarm provides precise control of the control loop.
With the optional current transformer, you can directly monitor the load and activate the HN alarm in case of power failure or short circuit of the solid state power unit.
Software can be used to define the state of the alarm outputs or a preset power value to be supplied in case of broken probe, thereby assuring the unit's continuity of service.

Tuning
• Self-tuning: calculation of PID parameters at system power-up.
• Continuous auto-tuning: continuous optimization of PID values
• One shot auto-tuning: modulation of output and automatic recalculation of PID parameters from event

Special functions
• Soft-start: slices power based on a set time
• Software off: disables control with consequent deactivation of outputs
• Input/output control: activation of outputs and control of inputs can be disengaged from internal firmware
• Simulation of four independent Geflex units (without cutting power).

COMMUNICATION PORTS

The unit is supplied with one communication port [PORT 1] that is used as a local bus for the connection of multiple GFXtermo objects connected to an operator panel or to an industrial PC.
In addition to this port, the current range of Geflex products can be connected via the 10-pin connector.
A second communication port [PORT 2] is available on request, configurable with the most popular industrial protocols:
CANopen,
DeviceNet,
Profibus DP,
Modbus RTU
Ethernet Modbus TCP,
Ethernet IP,
EtherCAT,
ProfiNET.

Network addresses
The network node address is assigned in a positive manner with two rotary selectors.

GENERAL DESCRIPTION

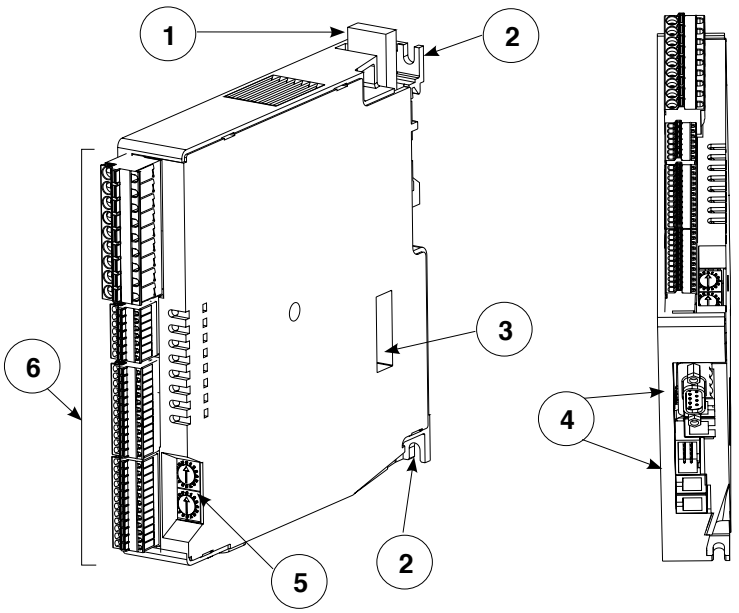

1 cursor for insertion/removal of DIN bar attachment
2 access for screwdriver to power connector screws
3 dip switches for function configuration
4 connectors for communication ports (Port1, Port2)
5 rotary switches for setting node address or number
6 signal and power supply connectors (J1, J2, J3, J4)

DIMENSIONS

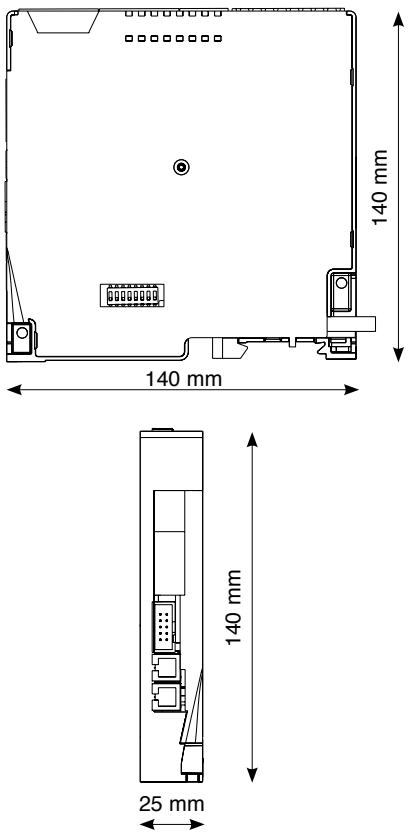

TECHNICAL DATA

INPUTS

IN1...IN4 [analog process inputs]
Connector: J4

Function
Process variable default (configurable)
Sampling time
120msec all four inputs
Accuracy
0,2% FS ±1 scale points at 25°C.
(16000 points)
Thermal drift
0,005% FS/°C
Input filter
0...20,0sec
Zero offset
Adjustable in range -999...+999 scale points
Type
• *ITS90 thermocouples:*
J, K, R, S, T, custom (IEC584-1, CEI EN 60584-1, 60584-2).
Cold junction compensation: internal, with automatic compensation.
Temperature scale: °C/°F
• *Resistance thermometer:* Pt100 DIN 43760
Max. line resistance 20Ω
Temperature scale: °C/°F
• *Voltage: range* 0/12...60mV,
Ri > 1MΩ 0/0,2…1V, Ri > 1MΩ
custom 60mV at 32 segments
• *Current: range* 0/4...20mA , Ri = 50Ω
custom 20mA at 32 segments

IN5...IN8 [auxiliary analog inputs]
Connector J3
Note:
Alternatives to external CT inputs IN9... IN12

Function
Analog inputs read default
Sampling time
480msec
Accuracy
1% FS ±1 scale points at 25°C.
Type
• *ITS90 thermocouples:*
J, K, R, S, T, custom (IEC584-1, CEI EN 60584-1, 60584-2).
Cold junction compensation: internal, with automatic compensation.
• *Voltage:* range 0/12...60mV, Ri > 1MΩ

IN9...IN12 [external CT inputs]
Connector: J3
Note:
in alternative to auxiliary analog inputs IN5...IN8

Function
External CT read default
Sampling time
60msec
Accuracy
1% FS ±1 scale points at 25°C.
Type
• External CT 50mAac; 50/60Hz, Ri = 10Ω

DI1, DI2 [digital inputs]
Connector: J2

Function
Defaults disabled (configurable)
Type
PNP, 24Vdc, 8mA (isol. 3500V)

OUTPUTS

OUT 1...4 [heating control]
Connector: J3a/J3

Function
Heating control default (configurable)
Type
• *Logic:* 24Vdc, 35mA
Led (yellow)
• *Signals output state*

OUT 5...8 [cooling control]
Connector: J1

Function
Cooling control default (configurable)
Type
• *Relay:* NO, max 3A, 250V/30Vdc, cosφ =1 resistive load
• *Logic:* 24Vdc, 35mA
• *Continuous:* - voltage: 0/2...10V, ±10V, max 25mA protected against short circuit
- current: 0/4...20mA su 500Ω max
- isolation: 1500V
• *Triac:* 230V/4Amp AC51
(1A for four)
(4A for two)

OUT 9...10 [alarms]
Connector: J1a/J1

Function
Alarms default (configurable)
Type
Relè: contact NO, max 5A,/30Vdc, cosφ = 1

LEDs

RN .....RUN state of CPU
ER.....error
DI1.....state of digital input DI1
DI2.....state of digital input DI2
O1.....state of main output Out.1
O2.....state of main output Out.2
O3.....state of main output Out.3
O4.....state of main output Out.4

COMMUNICATION PORTS

SERIAL 1 [local bus] Connectors: S1/S2/S3

Function
Local bus
Protocol
Modbus RTU
Baud Rate
19,2Kbps (default)
settable 1,2...57,6 Kbps
Node address
Settable with double rotary selector
Connector S1 / S2
2xRJ10 telephone type 4-4, RS485
2-wires isol. 1500V
Connector S3
10 pins for flat cable

SERIAL 2 [fieldbus]
Connectors: S4 / S5

Function
External fieldbuses
Protocol

Modbus RTU	57,6 Kbps
CANopen	10K...1Mbps
Profibus DP	9,6...12Mbps
DeviceNet	125K...500Kbps
Ethernet Modbus TCP, Ethernet IP	10/100Mbps
EtherCAT	100Mbps
ProfiNET	100Mbps

See accessories

MICROSWITCHES

8 dip switches are available to select wiring mode and different functionalities.

GENERAL CHARACTERISTICS

Power supply : 24Vdc ±25%, max 9VA

Protection level : IP20

Working temperature: 0...50°C

Storage temperature: -20...+70°C

Relative Humidity: 20...85% UR non-condensing

Installation: EN50022 DIN rod or on panel with screw

Dimensions:

Depth	140mm
Width	25mm
Height	140mm

Weight: 320g.

ELECTRICAL CONNECTIONS

logic / communication

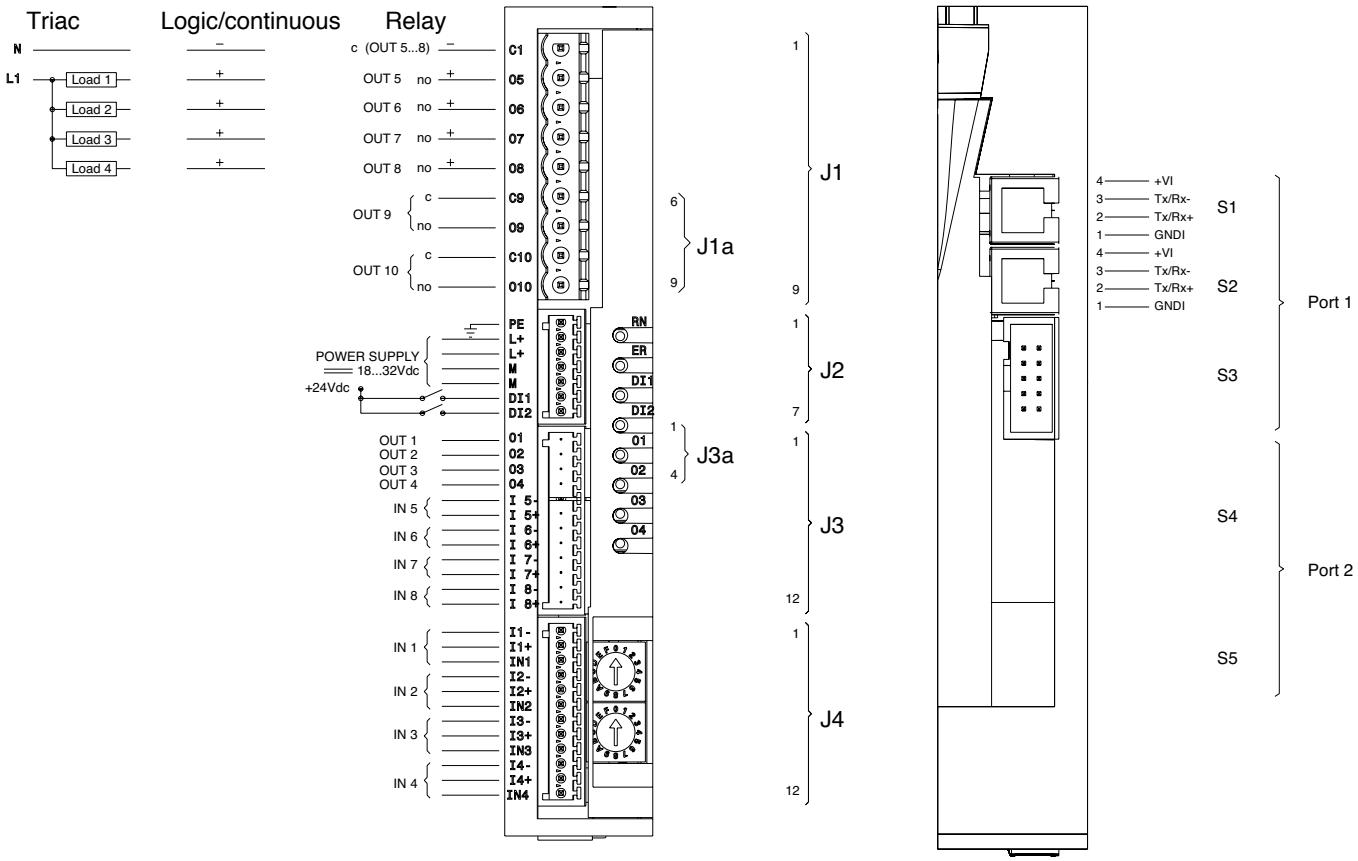

ORDER CODE

GFXTERMO4

Auxiliary Outputs	
Absent	**0**
Relay	**R**
Logic	**D**
Continuous	**C**
Triac	**T**

Auxiliary Inputs	
Absent	**0**
4 Current transformers	**1**
4 Linear inputs (**)	**2**

Fieldbus	
0	Absent
M	Modbus RTU
P	Profibus DP
C	CANopen
C1	Euromap 66
D	DeviceNet
E	Ethernet Modbus TCP
E1	Ethernet IP (***)
E2	EtherCAT
E4	ProfiNET
E5	Real Time Ethernet (***)
E8	Ethernet IP (***)

(**) Option NOT available with Fieldbus E1 or E2 or E4 or E5 or E8.

(***) To check the compatibility between the different product releases please look at the specific technical documentation on the web site www.gefran.com.

GEFRAN spa reserves the right to make aesthetic or functional changes at any time and without notice.

c UL us	Conformity C/UL/US File no. E216851
CE	The instrument conforms to the European Directives 2014/30/EU and 2014/35/EU with reference to the generic standards: **EN 61000-6-2** (immunity in industrial ambient) **EN 61000-6-3** (emission in residential ambient) **EN 61010-1** (safety)

GEFRAN

GEFRAN spa via Sebina, 74 - 25050 Provaglio d'Iseo (BS)
Tel. 03098881 - fax 0309839063
Internet: http://www.gefran.com