U-GAGE™ S18U Series Sensors with Discrete Output

18 mm Ultrasonic Sensors with TEACH-Mode programming



Features

- Fast, easy-to-use TEACH-Mode programming; no potentiometer adjustments
- Short dead zone
- One NPN and one PNP output
- Two bi-colored status LEDs
- Rugged encapsulated design for harsh environments
- Choose 2 meter or 9 meter unterminated cable, or 5-pin Euro-style QD connector
- Wide operating range of -20° to +60°C (-13° to +140°F)
- Choose either straight or right-angle housing
- Temperature compensation
- Configurable for normally open or normally closed operation
- Fast response time (5 milliseconds)

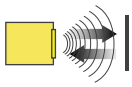

Ultrasonic

Models

Model Number	Sensing Range	Cable*	Supply Voltage	Output	Housing Configuration
S18UBA	30 to 300 mm (1.2" to 11.8")	5-wire, 2 m (6.5') cable	10 to 30V dc	Bipolar NPN/PNP	Straight
S18UBAQ		5-pin Euro-style QD			
S18UBAR		5-wire, 2 m (6.5') cable			Right-Angle
S18UBARQ		5-pin Euro-style QD			

* 9 m cables are available by adding suffix "**W/30**" to the model number of any cabled sensor (e.g., **S18UBA W/30**).
A model with a QD connector requires a mating cable; see page 10.

Information about analog-output models is available on Banner's website: www.bannerengineering.com

WARNING . . . Not To Be Used for Personnel Protection

Never use these products as sensing devices for personnel protection. Doing so could lead to serious injury or death. These sensors do NOT include the self-checking redundant circuitry necessary to allow their use in personnel safety applications. A sensor failure or malfunction can cause either an energized or de-energized sensor output condition. Consult your current Banner Safety Products catalog for safety products which meet OSHA, ANSI and IEC standards for personnel protection.

Printed in USA 02/05 P/N 108964 rev. A

Principles of Operation

Ultrasonic sensors emit one or multiple pulses of ultrasonic energy, which travel through the air at the speed of sound. A portion of this energy reflects off the target and travels back to the sensor. The sensor measures the total time required for the energy to reach the target and return to the sensor. The distance to the object is then calculated using the following formula:

$$D = \frac{ct}{2}$$

D = distance from the sensor to the target
c = speed of sound in air
t = transit time for the ultrasonic pulse

To improve accuracy, an ultrasonic sensor may average the results of several pulses before outputting a new value.

Temperature Effects

The speed of sound is dependent upon the composition, pressure and temperature of the gas in which it is traveling. For most ultrasonic applications, the composition and pressure of the gas are relatively fixed, while the temperature may fluctuate.

In air, the speed of sound varies with temperature according to the following approximation:

$$C_{m/s} = 20\sqrt{273 + T_C}$$

$C_{m/s}$ = speed of sound in meters per second
T_C = temperature in °C

Or, in English units:

$$C_{ft/s} = 49\sqrt{460 + T_F}$$

$C_{ft/s}$ = speed of sound in feet per second
T_F = temperature in °F

Temperature Compensation

Changes in air temperature affect the speed of sound, which in turn affects the distance reading measured by the sensor. An increase in air temperature shifts both sensing window limits closer to the sensor. Conversely, a decrease in air temperature shifts both limits farther away from the sensor. This shift is approximately 3.5% of the limit distance for a 20° C change in temperature.

The S18U series ultrasonic sensors are temperature compensated. This reduces the error due to temperature by about 90%. The sensor will maintain its window limits to within 1.8% over the -20° to +60° C range.

NOTES:

- Exposure to direct sunlight can affect the sensor's ability to accurately compensate for changes in temperature.
- If the sensor is measuring across a temperature gradient, the compensation will be less effective.
- The temperature warmup drift upon power-up is less than 1.7% of the sensing distance. After 10 minutes, the apparent distance will be within 0.3% of the actual position. After 25 minutes, the sensing distance will be stable.

Banner Engineering Corp. • Minneapolis, MN U.S.A.
www.bannerengineering.com • Tel: 763.544.3164

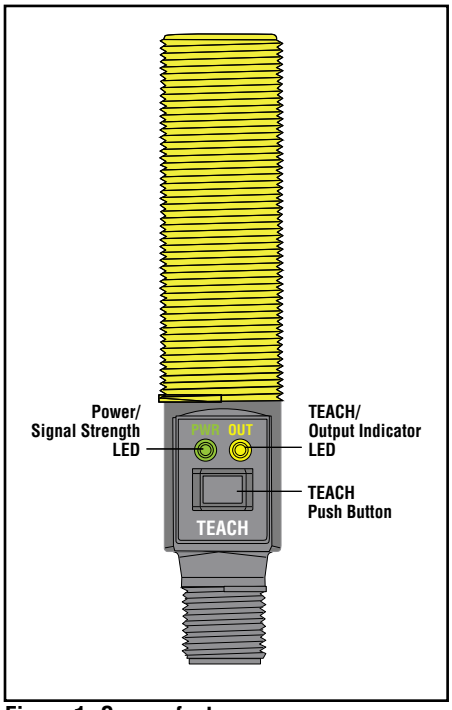

Figure 1. Sensor features

Sensor Programming

Two TEACH methods may be used to program the sensor:

- Teach individual minimum and maximum limits, or
- Use Auto-Window feature to center a sensing window around the taught position.

The sensor may be programmed either via its push button, or via a remote switch. Remote programming also may be used to disable the push button, preventing unauthorized personnel from adjusting the programming settings. To access this feature, connect the gray wire of the sensor to 0 - 2V dc, with a remote programming switch between the sensor and the voltage.

NOTE: The impedance of the Remote Teach input is 12 kΩ.

Programming is accomplished by following the sequence of input pulses (see programming procedures starting on page 4). The duration of each pulse (corresponding to a push button "click"), and the period between multiple pulses, are defined as "T":

0.04 seconds < T < 0.8 seconds

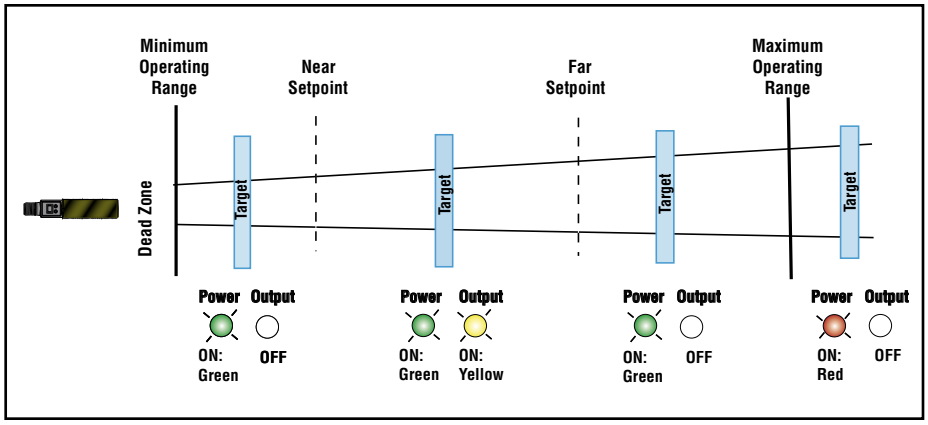

Figure 2. TEACH Interface

Status Indicators

Power ON/OFF LED	Indicates
OFF	Power is OFF.
ON Red	Target is weak or outside sensing range.
ON Green	Sensor is operating normally, good target.

Output/Teach LED	Indicates
OFF	Target is outside window limits (normally open operation).
ON Yellow	Target is within window limits (normally open operation).
ON Red (solid)	In Teach Mode, waiting for first limit.
ON Red (flashing)	In Teach Mode, waiting for second limit.

Teaching Minimum and Maximum Limits

General Notes on Programming

- The sensor will return to Run mode if the first Teach condition is not registered within 120 seconds.
- After the first limit is taught, the sensor will remain in Program mode until the Teach sequence is finished.
- To exit Program mode without saving any changes, press and hold the programming push button > 2 seconds (before teaching the second limit). The sensor will revert to the last saved limits.

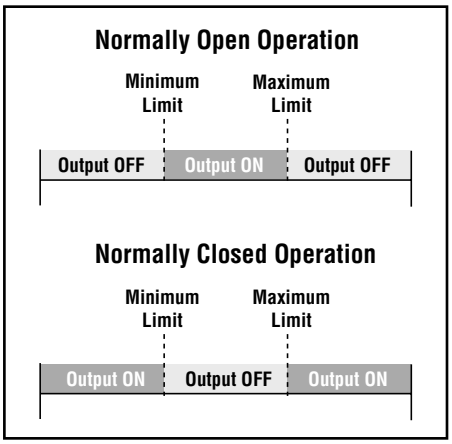

Figure 3. Teaching independent minimum and maximum limits

	Procedure		Result
	Push Button	**Remote Wire** **0.04 sec. < T < 0.8 sec.**	
Programming Mode	• Push and hold the push button 	• No action required; sensor is ready for first limit teach	**Output LED:** ON Red **Power LED:** ON Green (good signal) or ON Red (no signal)
Teach First Limit	• Position the target for the first limit	• Position the target for the first limit	**Power LED:** Must be ON Green
	• "Click" the push button 	• Single-pulse the remote line 	**Teach Accepted** **Output LED:** Flashing Red **Teach Unacceptable** **Output LED:** ON Red
Teach Second Limit	• Position the target for the second limit	• Position the target for the second limit	**Power LED:** Must be ON Green
	• "Click" the push button 	• Single-pulse the remote line 	**Teach Accepted** **Output LED:** Yellow or OFF **Teach Unacceptable** **Output LED:** Flashing Red

Banner Engineering Corp. • Minneapolis, MN U.S.A.
www.bannerengineering.com • Tel: 763.544.3164

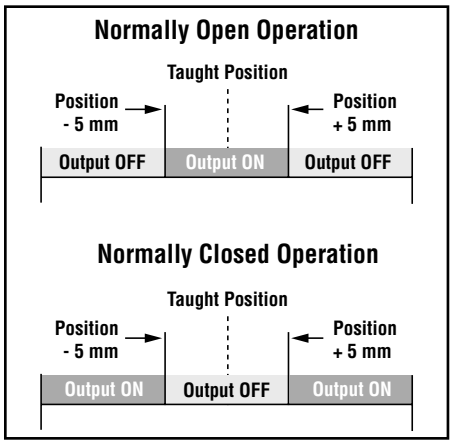

Figure 4. Using the Auto-Window feature for programming each output

Teaching Limits Using the Auto-Window Feature

Teaching the same limit twice for the same output automatically centers a 10 mm window on the taught position.

General Notes on Programming

- The sensor will return to Run mode if the first Teach condition is not registered within 120 seconds.
- After the first limit is taught, the sensor will remain in Program mode until the Teach sequence is finished.
- To exit Program mode without saving any changes, press and hold the programming push button > 2 seconds (before teaching the second limit). The sensor will revert to the last saved program.

	Procedure		Result
	Push Button	**Remote Wire** 0.04 sec. < T < 0.8 sec.	
Programming Mode	• Push and hold the push button	• No action required; sensor is ready for first limit teach	**Output LED:** ON Red **Power LED:** ON Green (good signal) or ON Red (no signal)
Teach Limit	• Position the target for the center of the window	• Position the target for the center of the window	**Power LED:** Must be ON Green
	• "Click" the push button	• Single-pulse the remote line (T)	**Teach Accepted** **Output LED:** Flashing Red **Teach Unacceptable** **Output LED:** ON Red
Re-Teach Limit	• Without moving the target, "click" the push button again	• Without moving the target, single-pulse the remote line again (T)	**Teach Accepted** **Output LED:** Yellow or OFF **Teach Unacceptable** **Output LED:** Flashing Red

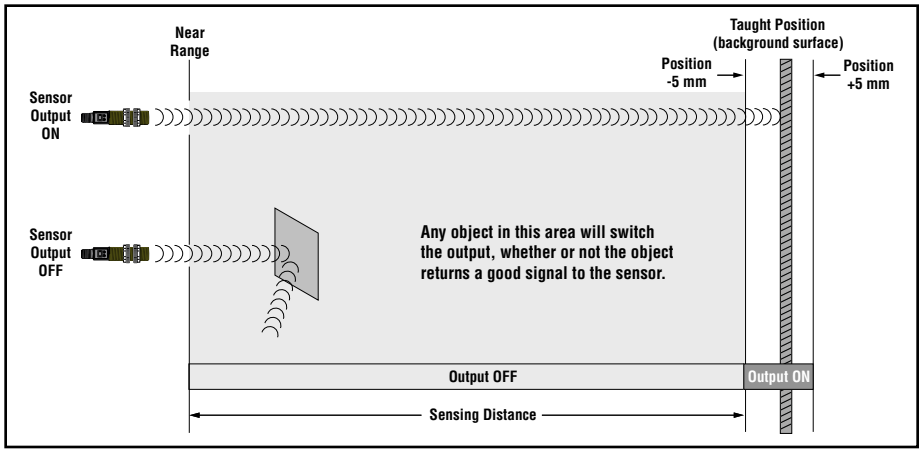

Figure 5. An application for the Auto-Window feature (retroreflective mode)

Normally Open/Normally Closed Operation Select

The sensor can be configured for either normally open or normally closed operation via the remote teach wire (gray). A series of three pulses on the line will toggle between normally open and normally closed operation. Normally open is defined as the output energizing when the target is present. Normally closed is defined as the output energizing when the target is absent. See Figures 3 and 4.

	Procedure		Result
	Push Button	Remote Wire 0.04 sec. < T < 0.8 sec.	
Toggle between N.O. / N.C. Operation	• Not available via push button	• Triple-pulse the remote line 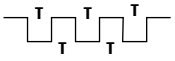	• Either Normally Open or Normally Closed operation is selected, depending on previous condition.

Push Button Lockout

Enables or disables the push button to prevent unauthorized adjustment of the program settings.

	Procedure		Result
	Push Button	Remote Wire 0.04 sec. < T < 0.8 sec.	
Enable/Disable Push Button	• Not available via push button	• Four-pulse the remote line 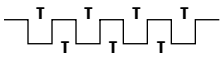	• Push buttons are either enabled or disabled, depending on previous condition.

Banner Engineering Corp. • Minneapolis, MN U.S.A.
www.bannerengineering.com • Tel: 763.544.3164

Specifications

Sensing Range	30 to 300 mm (1.2" to 11.8")	
Supply Voltage	10 to 30V dc (10% maximum ripple); 65 mA max. (exclusive of load), 40 mA typical @ 25V input	
Ultrasonic Frequency	300 kHz, rep. rate 2.5 ms	
Supply Protection Circuitry	Protected against reverse polarity and transient voltages	
Output Configuration	SPST solid-state switch conducts when target is sensed within sensing window; one NPN (current sinking) and one PNP (current sourcing) output in each model.	
Output Protection	Protected against short circuit conditions	
Output Ratings	100 mA maximum **OFF-state leakage current:** < 5 microamps **NPN saturation:** < 200 mV @ 10 mA and < 600 mV @ 100 mA **PNP saturation:** < 1.2V @ 10 mA and < 1.6V @ 100 mA	
Output Response Time	5 milliseconds	
Delay at Power-Up	300 milliseconds	
Temperature Effect	0.02% of distance/ °C	
Repeatability	0.5 mm	
Minimum Window Size	5 mm	
Hysteresis	0.7 mm	
Adjustments	**Sensing window limits:** TEACH-Mode programming of near and far window limits may be set using the push button or remotely via TEACH input (see page 3).	
Indicators	**Range Indicator (Red/Green)**	**Green** — Target is within sensing range **Red** — Target is outside sensing range **OFF** — Sensing power is OFF
	Teach/Output Indicator (Yellow/Red)	**Yellow** — Target is within taught limits **OFF** — Target is outside taught window limits **Red** — Sensor is in TEACH mode
Remote TEACH Input	**Impedance:** 12 kΩ	
Construction	**Threaded Barrel:** Thermoplastic polyester **Push Button:** Santoprene	**Push Button Housing:** ABS/PC **Lightpipes:** Acrylic
Operating Conditions	**Temperature:** -20° to +60° C (-4° to +140° F) **Maximum relative humidity:** 100%	
Connections	2 m (6.5') or 9 m (30') shielded 5-conductor (with drain) PVC jacketed attached cable or 5-pin Euro-style quick-disconnect (see page 10 for quick-disconnect cable options)	
Environmental Rating	Leakproof design is rated IEC IP67; NEMA 6P	
Vibration and Mechanical Shock	All models meet Mil. Std. 202F requirements method 201A (vibration: 10 to 60Hz max., double amplitude 0.06", maximum acceleration 10G). Also meets IEC 947-5-2 requirements: 30G 11 ms duration, half sine wave.	
Temperature Warmup Drift	Less than 1.7% of sensing distance upon power-up (see Temperature Compensation, page 2)	
Application Notes	Objects passing inside the specified near limit may produce a false response.	
Certifications	CE cULus	

U-GAGE™ S18U Series Sensor — Discrete Output

Sensor Response Curves

Effective Beam Pattern (Typical)

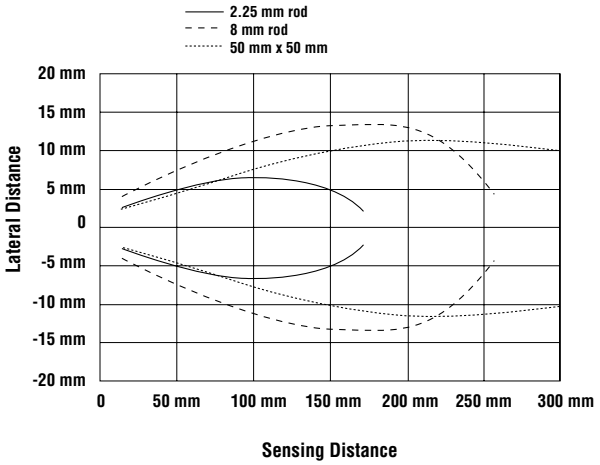

Maximum Target Rotation Angle

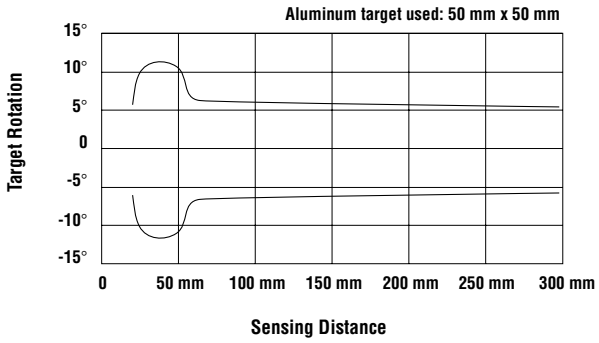

Hookups

Cabled Models

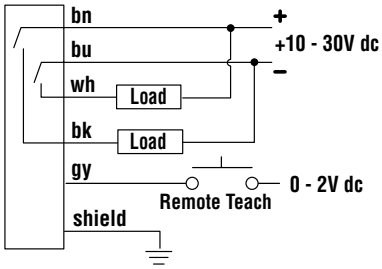

QD Models

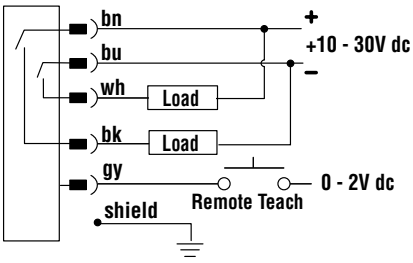

NOTE: It is recommended that the shield wire be connected to earth ground or DC common.

Dimensions

Straight Housing

Cabled Models

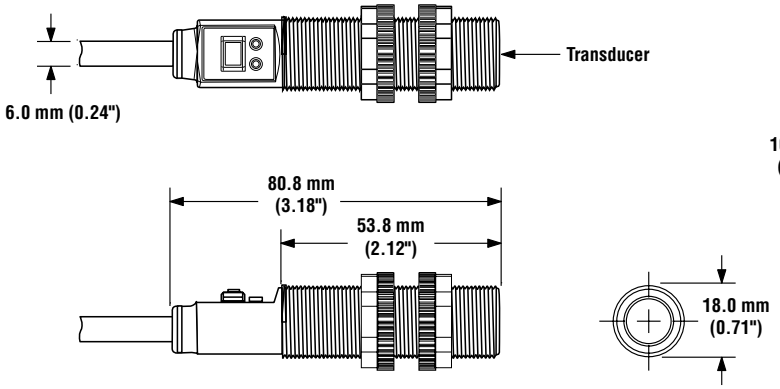

QD Models

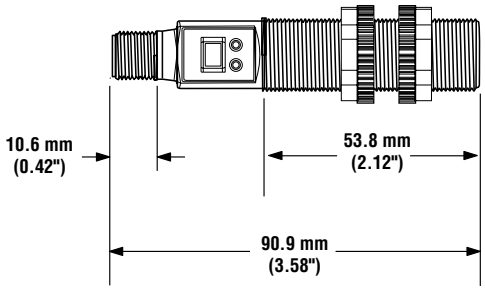

Right-Angle Housing

Cabled Models

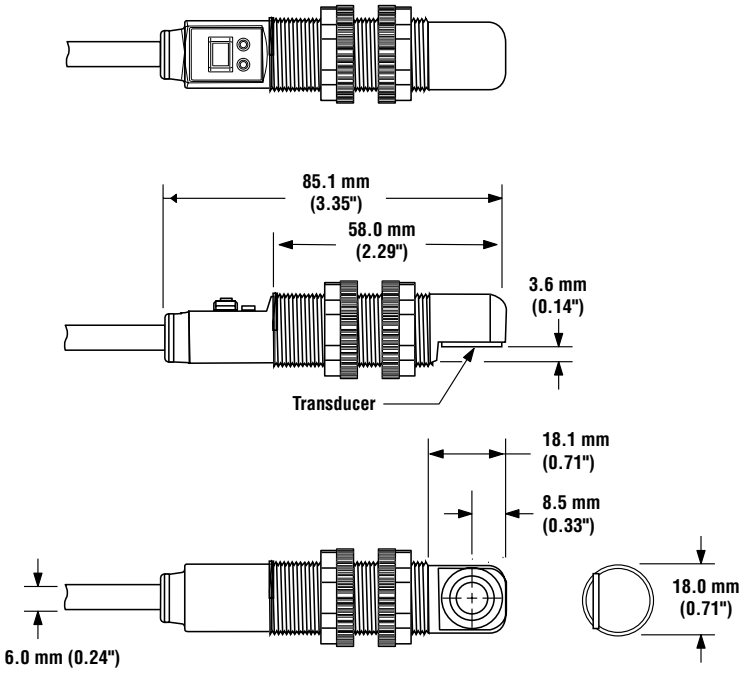

QD Models

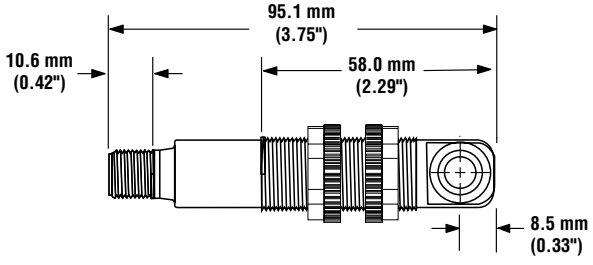

Accessories

Quick-Disconnect Cables

Style	Model	Length	Dimensions	Pinout
5-pin Euro-style straight, with shield	**MQDEC2-506** **MQDEC2-515** **MQDEC2-530**	2 m (6.5') 5 m (15') 9 m (30')	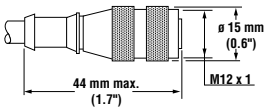	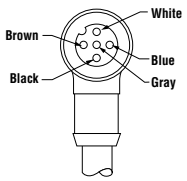
5-pin Euro-style right-angle, with shield	**MQDEC2-506RA** **MQDEC2-515RA** **MQDEC2-530RA**	2 m (6.5') 5 m (15') 9 m (30')	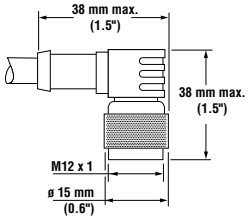	

Mounting Brackets

SMB18A

- 12-gauge, stainless steel, right-angle mounting bracket with a curved mounting slot for versatility and orientation
- Clearance for M4 (#8) hardware

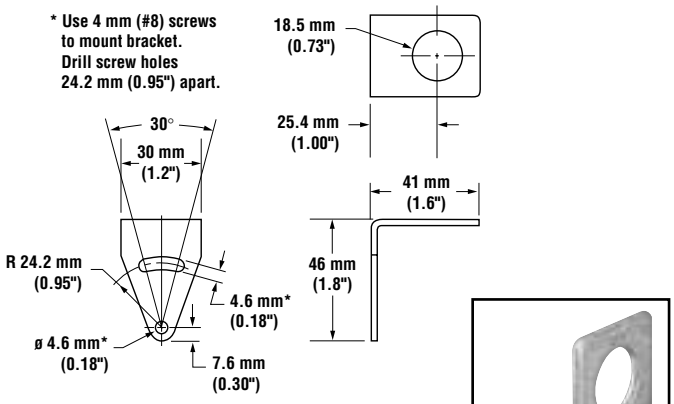

SMB18SF

- 18 mm swivel bracket
- Black thermoplastic polyester
- Includes stainless steel hardware

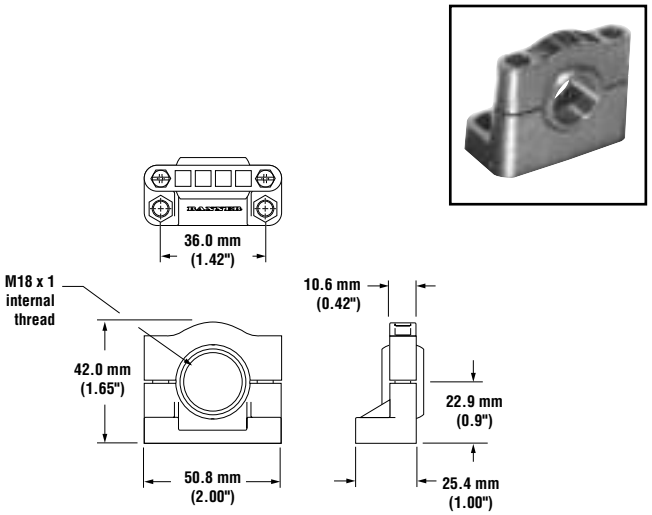

SMB18UR

- 2-piece universal 18 mm swivel bracket
- 300 series stainless steel
- Includes stainless steel swivel locking hardware

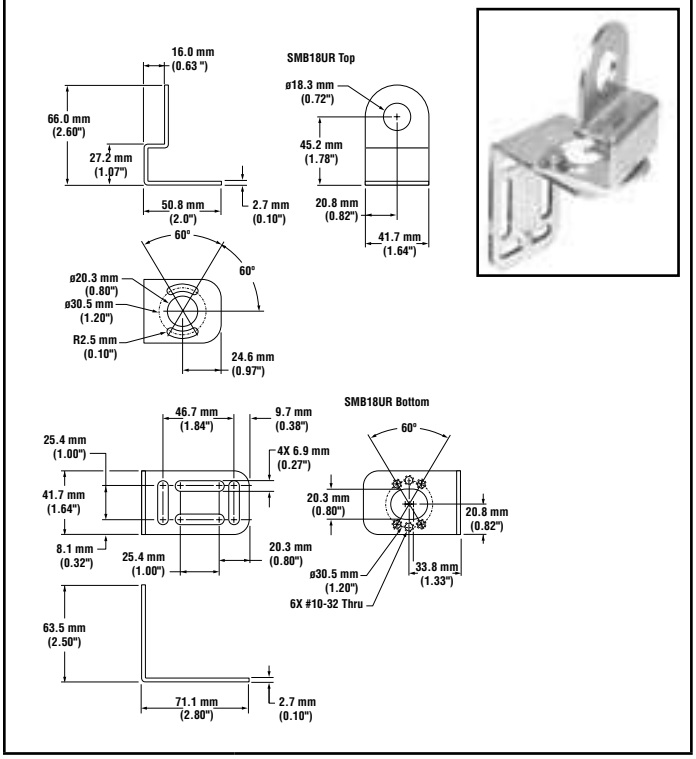

U-GAGE™ S18U Series Sensor — Discrete Output

more sensors, more solutions

WARRANTY: Banner Engineering Corp. warrants its products to be free from defects for one year. Banner Engineering Corp. will repair or replace, free of charge, any product of its manufacture found to be defective at the time it is returned to the factory during the warranty period. This warranty does not cover damage or liability for the improper application of Banner products. This warranty is in lieu of any other warranty either expressed or implied.

P/N 108964 rev A.

Banner Engineering Corp., 9714 Tenth Ave. No., Minneapolis, MN USA 55441 • Phone: 763.544.3164 • www.bannerengineering.com • Email: sensors@bannerengineering.com