S Series
Slide Switches



Models Available

Features/Benefits

- *6 to 15 AMPS*
- *Enclosed housing*
- *PC and Snap-in panel mounting*
- *Reversing option*
- *RoHS compliant*

Typical Applications

- *Portable tools*
- *Small appliances*
- *Floor care products*

Specifications

CONTACT RATING: Q contact material (S1XX, S2XX Models): 6 AMPS @ 125 V AC; 6 AMPS @ 250 V AC; 1 AMP @ 125 V DC . (S5XX, S6XX Models): 12 AMPS @ 125 V AC; 6 AMPS @ 250 V AC; 1 AMP @ 125 V DC . (S7XX, S8XX Models): 15 AMPS @ 125 V AC; 6AMPS @ 250 V AC . See page I-32 for additional ratings.

ELECTRICAL LIFE: 10,000 make-and-break cycles at full load.

CONTACT RESISTANCE: Below 10 m Ω typ. initial @ 2-4 V DC, 100 mA, for both silver and gold plated contacts.

INSULATION RESISTANCE: 10^9 Ω min.

DIELECTRIC STRENGTH: 1,000 Vrms min. @ sea level.

OPERATING TEMPERATURE: -30°C to +65°C

STORAGE TEMPERATURE: -30°C to +85°C

Materials

HOUSING: 6/6 nylon (UL94V-2), black.

TOP PLATE: 6/6 nylon (UL94V-2), black.

ACTUATOR: 6/6 nylon (UL94V-2), black (standard).

CONTACTS: Q contact material: Copper, silver plated. See page I-32 for additional contact materials.

TERMINALS: Q contact material: Copper, silver plated. See page I-32 for additional contact materials.

CONTACT SPRING: Music wire or stainless steel.

TERMINAL SEAL: Epoxy.

NOTE: Any models supplied with Q, B or G contact material are RoHS compliant.

NOTE: Specifications and materials listed above are for switches with standard options. For information on specific and custom switches, consult Customer Service Center.

Build-A-Switch

To order, simply select desired option from each category and place in the appropriate box. Available options are shown and described on pages I–29 through I–32. For additional options not shown in catalog, consult Customer Service Center.

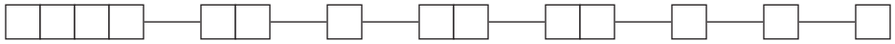

Switch Function
- S101 SPST, 6 AMPS
- S202 (DPDT, 6 AMPS
- S802 DPDT, 15 AMPS
- S102 SPDT, 6AMPS
- S112 SPDT, mom., 6 AMPS
- S201 DPST, 6 AMPS
- S602 DPDT, 12 AMPS
- S701 SPST, 15 AMPS
- S702 SPDT, 15 AMPS

Actuator
- 03 .335" high
- 04 .500" high
- 09 .250" high
- 12 Screwdriver slot (with marking)
- 13 Screwdriver slot (without marking)
- C2 Black cap
- C3 Red cap
- C5 Yellow cap

Detent
- 1 With detent
- 2 Without detent

Mounting Style
- SS Panel with mounting ears
- MS PC thru-hole
- S2 Snap-in panel with blacktop plate
- TS Panel with mounting ears

Terminations
- 03 Solder lug with hole
- 02 PC Thru-hole
- 04 PC Thru-hole
- 07 Quick connect
- 08 PC Thru-hole
- WC Wire lead

Housing Markings
- NONE No markings
- D ON-OFF
- L ON
- M ON-OFF
- N Red rectangle on one end

Contact Material
- Q Silver
- B Gold
- G Gold over silver

Seal
- NONE No seal
- E Epoxy seal

Dimensions are shown: Inch (mm)
Specifications and dimensions subject to change

SWITCH FUNCTION

NO. POLES	MODEL NO.	AMP RATING	SWITCH FUNCTION	SCHEMATIC	AVAILABLE MOUNTING STYLES
SP	S101	6	SPST	1 2	SS
	S102	6	SPDT	1 2 3	MS,SS
	S112	6	SPDT-MOM.	1 2 3	MS,SS
	S701	15	SPST	1 2	S1,S2,S3,ST
	S702	15	SPDT	1 2 3	S1,S2,S3,ST

NO. POLES	MODEL NO.	AMP RATING	SWITCH FUNCTION	SCHEMATIC	AVAILABLE MOUNTING STYLES
DP	S201	6	DPST	1 2 / 4 5	MS,SS,TS
	S202	6	DPDT	1 2 3 / 4 5 6	MS,SS, TS
	S602	12	DPDT	1 2 3 / 4 5 6	MS,SS, TS
	S802	15	DPDT	1 2 3 / 4 5 6	S1,S2,S3,ST

SPST

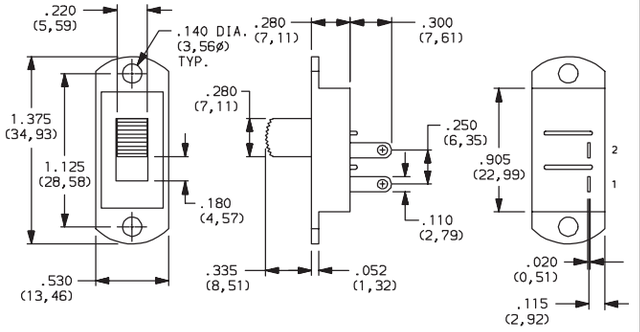

Part number shown: S101031SS03Q

DPDT

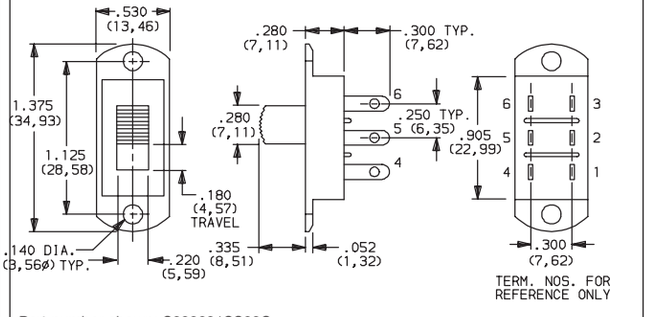

Part number shown: S202031SS03Q

NOTE: and MOM. in table indicates momentary action.

All models cULus with all options when ordered with 'G' or 'Q' contact material.

Contacts make on side actuator thrown.

ACTUATOR

03 .335" HIGH

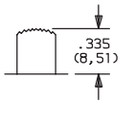

04 .500" HIGH

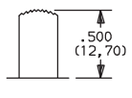

09 .250" HIGH

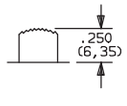

12 SCREWDRIVER SLOT (WITH MARKING)

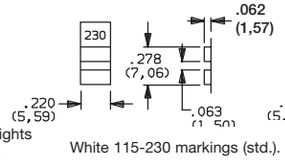

White 115-230 markings (std.).

13 SCREWDRIVER SLOT (WITHOUT MARKING)

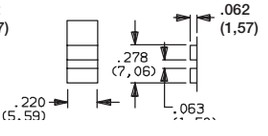

Without markings.

NOTE: Standard actuator color is black, other colors available, consult Customer Service Center. Alternate heights are available with '03, 04 and 09' actuators, consult Customer Service Center. Models with S2 mounting style, subtract .090 (2, 29). Actuators '12' and '13' are available with DPST and DPDT models only.

C2; C3; C5 SNAP-ON CAP

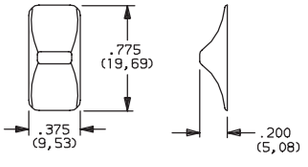

Available with S2 mounting style only.

OPTION CODE2	C1-CT CAP COLOR
C2	BLACK
C3	RED
C5	YELLOW

NOTE: Actuator finish: matte. If no color is specified, black will be supplied. Colored actuator caps may also be ordered separately and user installed, see page I-32.

Third Angle Projection

Dimensions are shown: Inches (mm)
Specifications and dimensions subject to change

S Series
Slide Switches

DETENT

1 WITH DETENT

Standard with all maintained models: S101, S102, S201, S202, S602, S701, S702, and S802.

2 WITHOUT DETENT

Standard with all momentary models: S112.

MOUNTING STYLE

SS PANEL WITH MOUNTING EARS



S202031SS03Q

DPDT

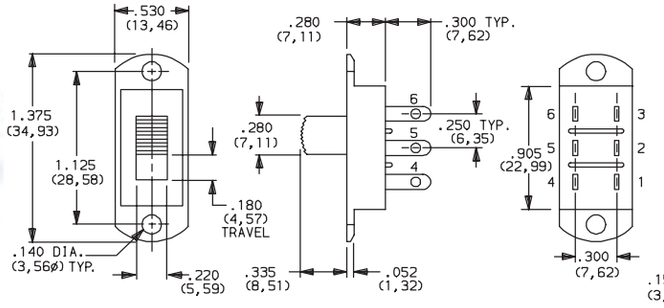

AVAILABLE WITH:

Models: S101, S102, S112, S201, S202 and S602
Terminations: All except 08
Actuators: 03, 04, 09, 12* and 13*.

*12 and 13 actuators not available with S1XX models.

MS PC THRU-HOLE



S202031MS02Q

DPDT

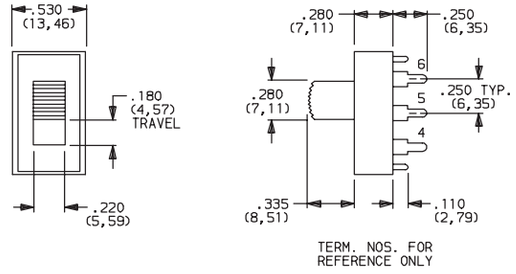

AVAILABLE WITH:

Models: S101, S102, S112, S201, S202, S602
Terminations: 02, 04 and 08
Actuators: 03, 04, 09, 12* and 13*

*12 and 13 actuators available with S201, S202 and S602 models only.

PC MOUNTING

For mounting information, see TERMINATIONS section, page I-31.

S2 SNAP-IN PANEL



S802C21S207Q

DPDT

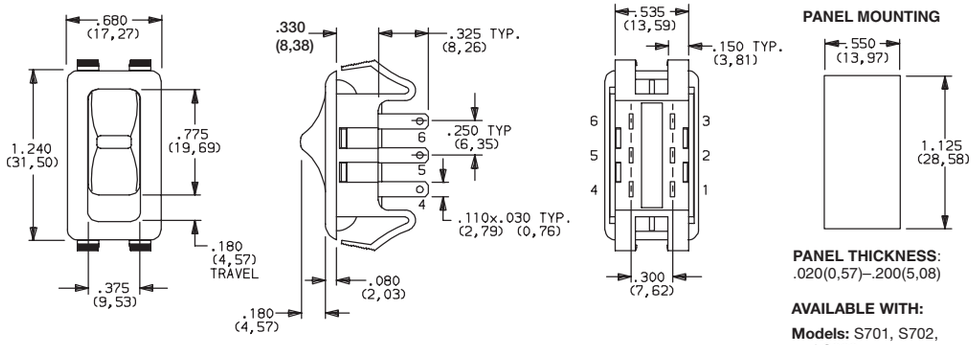

PANEL THICKNESS:
.020(0,57)–.200(5,08)

AVAILABLE WITH:

Models: S701, S702, and S802
Terminations: 04, 07, 57 and WC
Actuators: C2, C3, C5 and 03

Third Angle Projection

Dimensions are shown: Inch (mm)
Specifications and dimensions subject to change

MOUNTING STYLE

TS PANEL WITH MOUNTING EARS

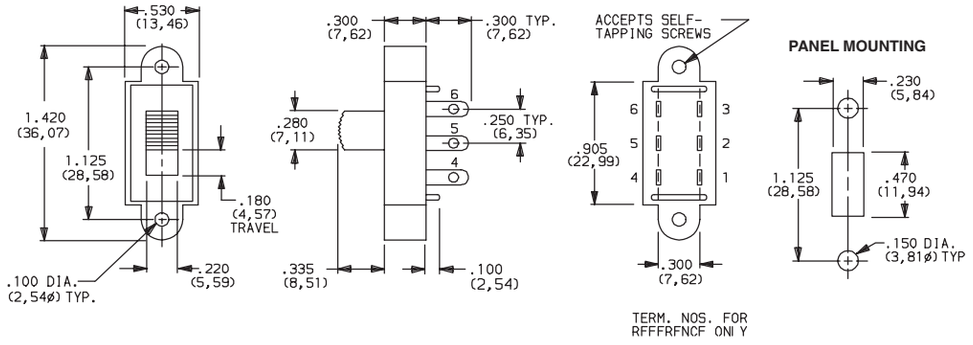



S202031TS03Q
DPDT

AVAILABLE WITH:

Models: S201, S202, and S602
Terminations: All
Actuators: 03, 04 and 12.

TERMINATIONS

03 SOLDER LUG WITH HOLE

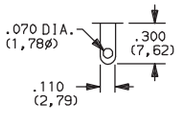

02 PC THRU-HOLE

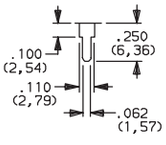

Recommended with 'MS' mounting style only.

04 PC THRU-HOLE

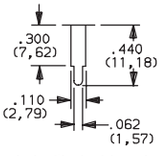

Recommended with double pole models only.

07 QUICK CONNECT

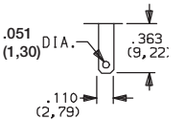

08 PC THRU-HOLE

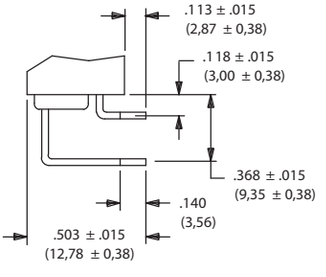

MS mounting style only.

WC WIRE LEAD

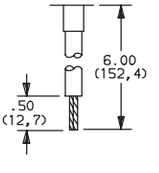

18 AWG wire for S1XX and S2XX models. 16 AWG wire for all other models. Black wire standard, other colors and lengths available, consult Customer Service Center. UL style 1015.

NOTE: All terminals on S1XX, S2XX and S6XX models are .020 (0,51) thick; all terminals on S7XX and S8XX models are .031 (0,79) thick.

PC MOUNTING

02 & 04 terminations

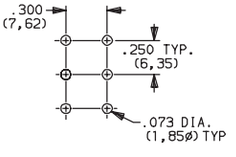

08 terminations
with MS mounting style.

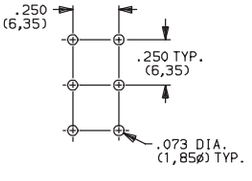

Third Angle Projection

Dimensions are shown: Inches (mm)
Specifications and dimensions subject to change

S Series
Slide Switches

TOP PLATE MARKINGS

NONE NO MARKINGS

D ON-OFF

L ON

M ON-OFF

N RED RECTANGLE ON ONE END

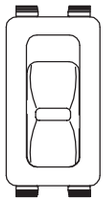

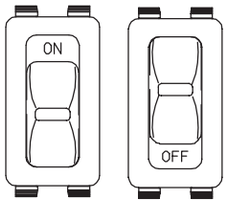

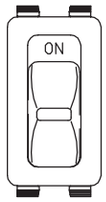

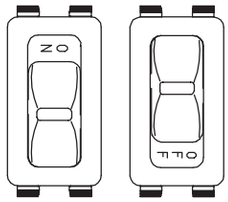

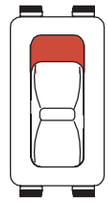

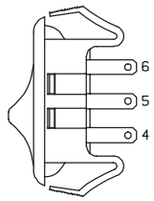

NOTE: Top plate markings are available with 'S2' mounting style only. The marking color on all top plates with marking options 'D, L and M' is white, standard. (except white top plates: marking color is black, standard). The marking color on all top plates with 'N' marking option is red, standard. Other marking colors are available, consult Customer Service Center.

Note: Orientation of actuator markings and terminals.

CONTACT MATERIAL

OPTION CODE	CONTACT MATERIAL	RATINGS	
Q	SILVER [2]	POWER	S1XX, S2XX MODELS: 6 AMPS @ 125 V AC; 6 AMPS @ 250 V AC; 1 AMP @ 125 V DC c UL us S6XX MODELS: 12 AMPS @ 125 V AC; 6 AMPS @ 250 V AC; 1 AMP @ 125 V DC c UL us S7XX, S8XX MODELS: 15 AMPS @ 125 V AC; 6 AMPS @ 250 V AC c UL us
B	GOLD [1]	LOW LEVEL/DRY CIRCUIT	0.4 VA MAX. @20 V AC OR DC max.
G	GOLD OVER SILVER [3]	LOW LEVEL/DRY CIRCUIT OR POWER	S1XX, S2XX MODELS: 0.4 VA MAX. @ 20 V AC OR DC MAX. OR 6 AMPS @ 125 V AC; 6 AMPS @ 250 V AC; 1 AMP @ 125 V DC c UL us S6XX MODELS: 0.4 VA MAX. @ 20 V AC OR DC MAX. OR 12 AMPS @ 125 V AC; 6 AMPS @ 250 V AC; 1 AMP @ 125 V DC c UL us S7XX, S8XX MODELS: 0.4 VA MAX. @ 20 V AC OR DC MAX. OR 15 AMPS @ 125 V AC; 6 AMPS @ 250 V AC c UL us

* Note: See Technical Data section of this catalog for RoHS compliant and compatible definitions and specifications.

[1] CONTACTS & TERMINALS: Copper, with gold plate over nickel plate.

[2] CONTACTS & TERMINALS: Copper, silver plated (standard with all termination options).

[3] CONTACTS & TERMINALS: Copper, with gold plate over nickel plate over silver plate.

NOTE: Any models supplied with Q, B or G contact material are RoHS compliant. All models c UL us with all options when ordered with 'G' or 'Q' contact material.

NOTE: 'G' contact material is equivalent to both 'B' and 'Q' contact materials.

SEAL

NONE NO SEAL

E EPOXY SEAL

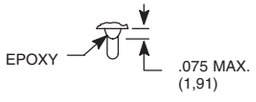

AVAILABLE HARDWARE

Cap, C2; C3 actuators



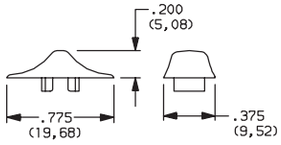

PART NO.

121160100 WHITE
121160200 BLACK
121160300 RED

Material: 6/6 Nylon
Finish: Matte

Cap, 03 actuator



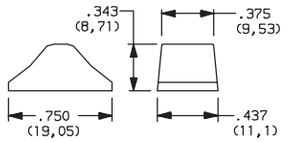

PART NO.

121000101 WHITE
121000102 BLACK
121000103 RED

Material: 6/6 Nylon
Finish: Gloss

NOTE: Other cap colors available, consult Customer Service Center.

Third Angle Projection

Dimensions are shown: Inch (mm)
Specifications and dimensions subject to change