E37250

Thermowell for temperature sensors

THERMOWELL, D6/1/2"NPT/L=300

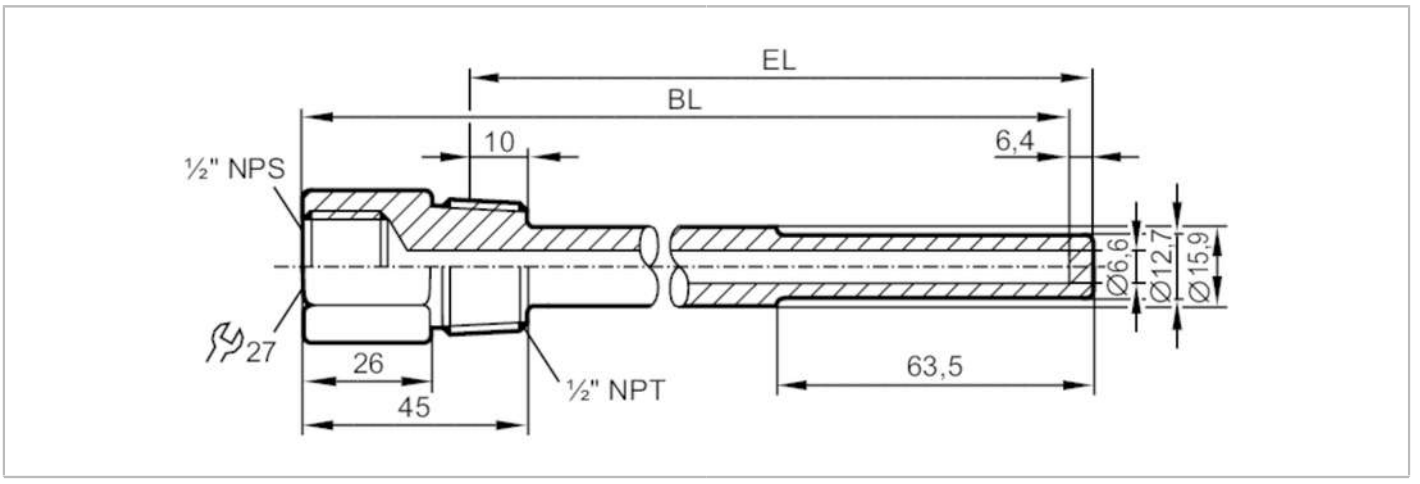

Application		
Design		for temperature sensors EL = 350 mm
Pressure rating	[bar]	400
Accuracy / deviations		
Max. permissible flow velocity	[m/s]	6
Mechanical data		
Weight	[g]	461.5
Materials		stainless steel (1.4404 / 316L)
Sensor connection		1/2" NPS Ø 6 mm suitable for G1/2 and 1/2" NPT
Process connection		1/2" NPT
Installation length EL	[mm]	277
Bore length BL	[mm]	304.8
Remarks		
Pack quantity		1 pcs.